VTS300 3-PHASE SLAVE REGULATOR

1. SAFETY INSTRUCTIONS

1.1. Important

- Read these instructions carefully before installation.
- Before use, follow all the installation and electrical connection instructions.
- Keep these instructions with the regulator for future use.
- Observe current technical and safety regulations.
- The regulator must be professionally installed and commissioned by a qualified technician. INCORRECT installation may cause damages.
- Before turning on regulator power, always check that it is correctly grounded.
- DO NOT tamper with or REMOVE internal regulator components; this NULL AND VOIDS THE WARRANTY and can cause damages.
- The user must be protected against electrical shock and the motor must be equipped with overload protection, as per current pertinent regulations.
- According to safety regulations, protection against any contact with live parts must be ensured by correct regulator installation; all parts that ensure protection must be secured so as irremovable without the help of a tool.
- DO NOT turn on the regulator without the protection lid.
- NEVER touch electrical circuit parts when the power is on.
- Install the regulator away from direct sunlight so as not to overheat the case.
- Make sure working conditions (working temperature, humidity, etc.) are within the indicated limits (see point 7).
- Do not install the regulator near heat sources (resistances, hot air ducts, etc.) where room temperature can exceed 50 °C, devices that generate strong magnetic fields, sites subject to rain, humidity, dust, excessive mechanical vibrations or shocks.

2. VTS300 DESCRIPTION

2.1. Overview

The VTS series regulators are three-phase controllers built on a Vetronite support in an IP55 grade GW PLAST box. The control zone is at the top of the board while the power zone is at the bottom.
In addition to the M3 and M4 terminal boards, regulation, connection and signal devices are found in the control zone.
The fan speed command varies according to the command signal received from the input. Output increases as input increases.

2.2. Key

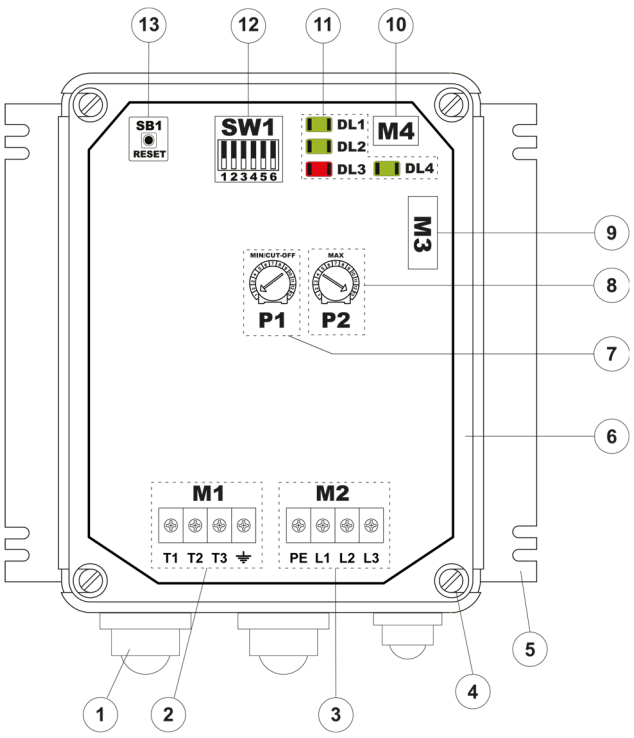

VTS300 key		
1	-	Wire clamps - connection wires
2	M1	Three-phase output terminal board (T1-T2-T3) + load GND
3	M2	Three-phase power supply terminal board (L1-L2-L3) + PE
4	-	TPN lock screws with max 2.5 N m torque
5	-	Wall mount perforated fin
6	-	GW PLAST case
7	P1	Minimum voltage settings (MIN / CUT-OFF)
8	P2	Maximum voltage settings (MAX)
9	M3	Command input terminal board
10	M4	Alarm relay terminal board
11	DL..	Signal led
12	SW1	Programming dip switch
13	SB1	Reset button

2.3. Mechanical dimensions

Model	Plate data			Mechanical dimensions						Weight(*)
	A	kV A	IP	A	B	C	D	E	F	Kg
VTS308	8	5.5	55	254	235	114	200	213	-	2.3
VTS312	12	8	55	254	230	128	200	213	170	2.5
VTS320	20	14	55	254	230	158	200	213	170	3.8

(*) Packaging included

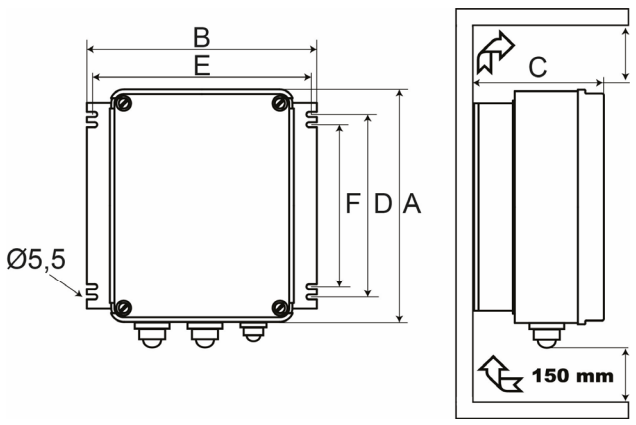

3. INSTALLATION

3.1. INSTALLATION

Vertically install the device with the wire inlet facing down. To permit correct heat dissipation, guarantee ≥150 mm clearance over and under the regulator.
Reassemble and make sure the external protection lid is fully closed.

3.2. Electrical connections

Flexible wire rated section.
Signal: ≤ 1.5 mm² (16 AWG)
Power (output): VTS308/312/320 ≤ 10 mm² (8 AWG)
Power (supply): VTS308/312/320 ≤ 10 mm² (8 AWG)
N.B. Protection devices: see point 8.

3.2.1. Power (L1/L2/L3/PE) and load (T1/T2/T3/GND) connection:

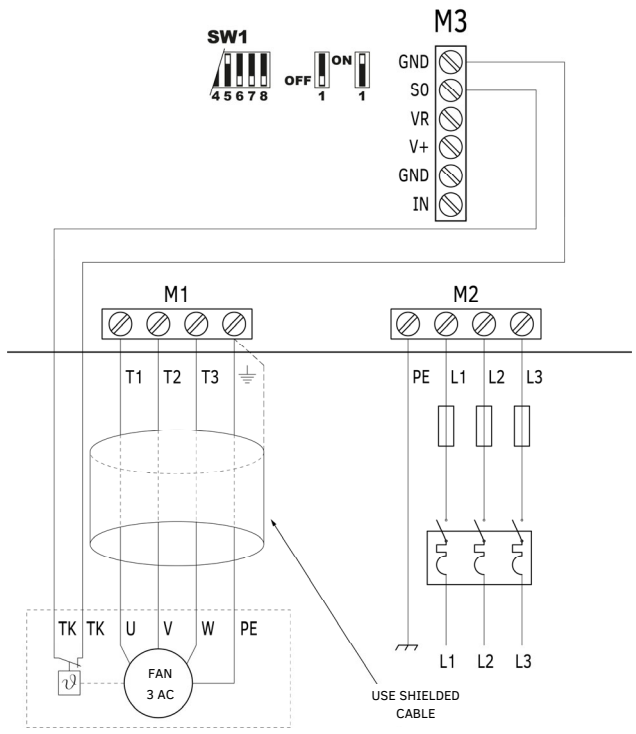

The regulator can be set to directly connect no. 4 fans (Three-phase + Ground) upon request.
Power (output): VTS308/312/320 ≤ 2.5 mm² (13 AWG)

3.2.2. Command signal connections (M3)

M3	Terminal	Label	Description
6	6	GND	Reference grounding
5	5	S0	ON-OFF input (see point 3.3.3)
4	4	VR	Reference voltage output +5.0 Vdc/+10.0 Vdc (±1.0%) (automatic switching)
3	3	V+	Power supply voltage output +22 Vdc (±20%)
2	2	GND	Reference grounding
1	1	IN	Command signal input

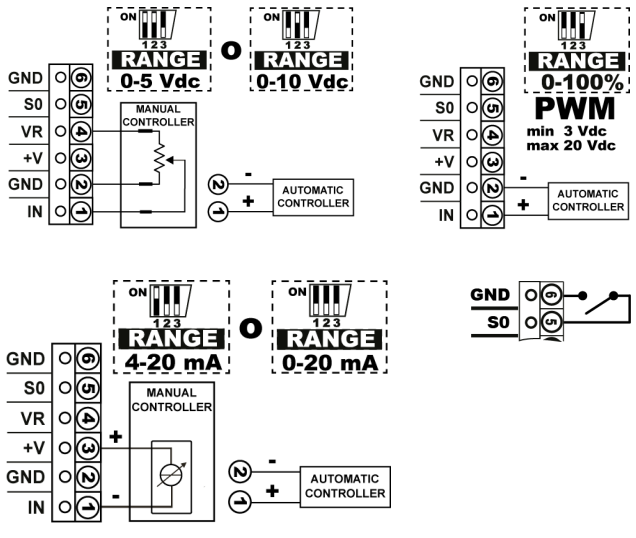

3.2.3. Alarm relay connection (M4)

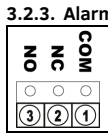

Terminal	Label	Description
3	NO	Normally open contact
2	NC	Normally closed contact
1	COM	Shared terminal

3.3. SW1 (1 – 8) function settings

SW1	Description
1,2,3	Command signal selection (see point 3.3.2)
4	ON = P1 **CUT-OFF** voltage settings OFF = P1 **(MIN) minimum** voltage settings
5,6	ON-OFF input function (see point 3.3.3)
7,8	Reserved, keep OFF

WARNING Press button SB1 after changing SW1 settings to apply changes.

3.3.1. Default settings

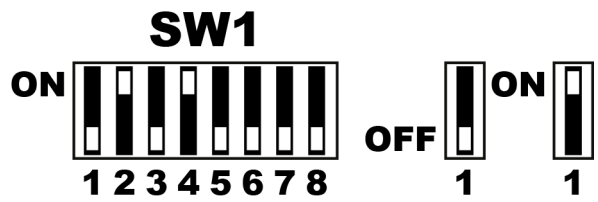

3.3.2. Command input function programming

SW1-1	SW1-2	SW1-3	Description
OFF	OFF	OFF	0-20 mA signal
ON	OFF	OFF	4-20 mA signal
OFF	ON	OFF	0-10 Vdc signal
ON	ON	OFF	0-5 Vdc signal
OFF	OFF	ON	PWM signal
ON	ON	ON	Cos Phi calibration(*) (reserved)

(*) N.B. During calibration of the Cos Phi, the CPU RUN led flashes at twice the normal speed.

3.3.3. Functional programming for the ON-OFF input (S0)

SW1-5	SW1-6	Description
OFF	OFF	Start/Stop function (open = start)
ON	OFF	Thermal contact function (closed = start)
OFF	ON	Output function at MAX (closed = MAX (P2))
ON	ON	Output function at 100% (closed = 100%)

4. FUNCTIONAL CHARACTERISTIC

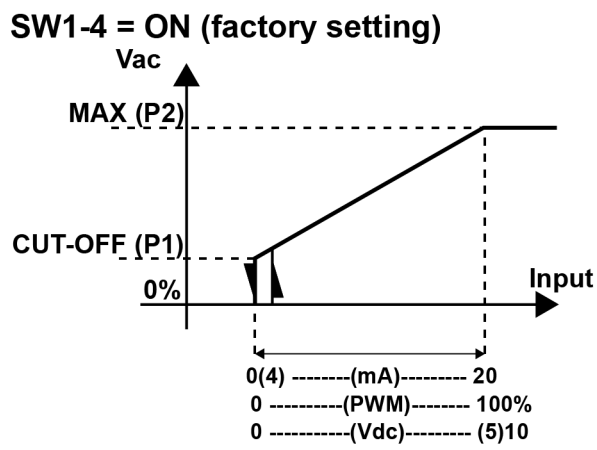

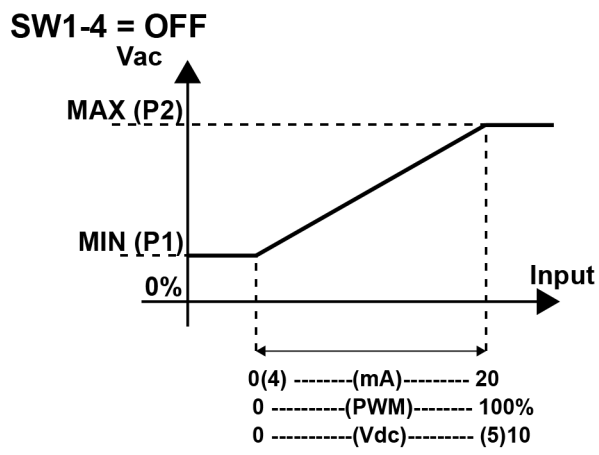

Manufactured by SELPRO - Fan Speed Controllers Specialist
SELPRO Srl – Via Piamarta 5/11 – 25021 Bagnolo Mella (BS) – selpro.it – info@selpro.it – Tel. +39 0306821611 – Fax +39 030622274

VTS300 3-PHASE SLAVE REGULATOR

5. TRIMMER REGULATION LIMITS

5.1. Regulation limits

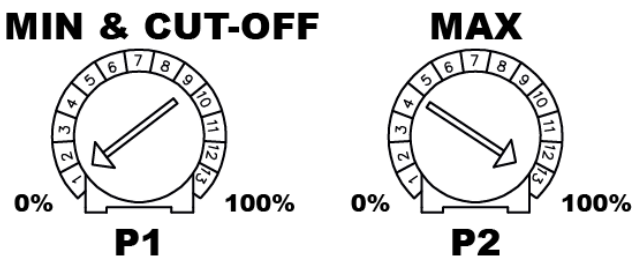

Trimmer	Label	Description
P1	MIN/ CUT-OFF	**Use as minimum voltage (MIN)** SW1-4 = OFF (range from 0-100%). Turn P1 clockwise to the required minimum voltage.
		Use as CUT-OFF (shutdown point) SW1-4 = ON (range from 0-100%). Once the minimum voltage is set, turn SW1-4 ON and press SB1 (reset). CUT-OFF will be set to minimum voltage.
P2	MAX	Maximum speed limit settings (range 0-100%).

6. SIGNALS

6.1. Led

Led	Color	Label	Description
DL1	GREEN	PWR	Power on (light on)
DL2	GREEN	CPU RUN	Microprocessor running (blinking light)
DL3	RED	FAIL	Fault alarm (blinking light) (see point 6.2)
DL4	GREEN	-	RL1 relay excited (light on)

6.2. Alarm blink code (DL3) in order of priority

Nr Blinks	Description
0 (light on)	Insufficient power supply Phase loss (L2, L3)
1	Board temperature over limit (> 85 °C)
2	Phase loss (L1)
3	T.K. contact open (SW1-5 = ON and SW1-6 = OFF)
4	Input signal over range
5	Input signal under range
6	Incorrect dip switch settings

N.B. When an alarm trips, DL2 remains off to facilitate counting DL3 flashes

7. TECHNICAL SPECIFICATIONS

7.1. Power supply:

Voltage: 400 Vac (±10%) three-phase (230/480 Vac upon request)
Frequency: 50/60 Hz automatic frequency recognition
Surge: For intallation category II (4 kV)
(> 500 Vac surge filters ON)
Mains: Monitoring on all three phases

7.2. Ground connection:

VTS300 regulators are compatible with **IT – TT – TN** ground connections

7.3. Current:

Rated RMS current @ 50 °C room temperature:

VTS308	8 A < 50 °C	> 50 °C -0,6 A/°C
VTS312	12 A < 50 °C	> 50 °C -0,6 A/°C
VTS320	20 A < 50 °C	> 50 °C -0,6 A/°C

Overload: 150% of rated current (=10" every 3')

7.4. Power:

Absorbed: 5 V A (command circuits)
Dissipated: VTS308 32 W @ 8 A
VTS312 48 W @ 12 A
VTS320 60 W @ 20 A
Functional characteristic: SLAVE regulator
Direct function; output increases as input increases

7.5. Input signals and contacts:

Analog: 0-10 Vdc, 0-5 Vdc (Ri = 10 kΩ
0-20 mA, 4-20 mA (Ri = 100 Ω)
Logic: PWM signal from 3 to 20 Vdc with positive polarity
Clear contact "ON-OFF": Programmable S0 contact (see point 3.3.3)

7.6. Output signals and contacts:

Auxiliary power: 22 Vdc (±20%), ≤ 20 mA not stabilized and protected against short circuit
5,0 Vdc (±1,0%), ≤ 20 mA protected against short circuit
Relè RL1: Contatti COM, NC e NO per allarme
3 A @ 250 Vac – 3 A @ 30 Vdc

7.7. Alarms:

Command input: 0-5 Vdc: Vin ≤ 5.5 Vdc
0-10 Vdc: Vin ≤ 11 Vdc
0-20 mA: Iin ≤ 24 mA
4-20 mA: 2 mA ≤ Iin ≤ 24 mA
Mains monitoring: Phase loss
Regulator: Working temperature control with internal probe (T > 85 °C)

7.8. Protections:

Surge: As per EN61000-4-5: surge category II (4 kV)
Auxiliary power: With PTC sensor for short circuit protection
Internal temperature: Internal thermal protection

7.9. Case:

Material: GWPLAST 75 (temperature < 85 °C) and aluminum
Pollution: High pollution
Fire resistance: Category D

7.10. Insulation

Case: Class I (use of grounded protection)
Command: 4000 Vac between command input and mains voltage parts

7.11. Working conditions:

Working temperature: From -20 °C to 50 °C; use S0 contact if T ≤ -10 °C
Storage temperature: From -25 °C to 65 °C
Humidity: From 0% to 85% non-condensing relative humidity
Vibrations: ≤ 1 g (9.8 m/s²)

7.12. Assembly:

Assembly: Wall mount in vertical position only

8. CIRCUIT BREAKER AND SHORT CIRCUIT PROTECTION

To protect the controller power module from severe short-circuits or overloads, it is imperative to use semiconductor protection fuses with a suitable I2t value fitted upstream of the controller.

Model	Circuit breaker	Protection fuses - SRC			
		Type	Vac	Amp	P/N
VTS308	**16 A**	10x38	690	16	FR10GB69V16
VTS312	**24 A**	10x38		16	FR10GB69V16
VTS320	**40 A**	14x51		25	FR10GB69V25

For additional protection, a circuit breaker with a C-curve can be used, mounted upstream of the partializer. The installer must install these protections.

Surge arrester:
Electrical protection inserted between the regulator power supply and grounding, that protects the device from transitory power surges up to 480 Vac.

Warning:
Disconnect the faston contact from the ground reference, in the electrical rigidity test.

Warning:
For DIFFERENTIAL protection systems, use components with grounded current dispersion ≥ 60 mA.

VTS has a grounded current dispersion of about 4 mA

9. MANUFACTURER'S DECLARATION

This instrument was designed and constructed for use in Industrial environments and meets the following community directives:

- Low Voltage Directive (LVD) 2014/35/EU
- Electro Magnetic Compatibility (EMC) 2014/30/EU

10. DIRECTIVES AND TECHNICAL STANDARDS

The essential directive requirements are met by compliance with "generic standards" for the industrial environment.

10.1. CE – Declaration of conformity

Directive	CE standard code	Version
EMC 2014/30/UE	EN IEC 61800-3 EN IEC 61000-6-2 EN 61000-6-3 EN IEC 55014-1 EN IEC 55014-1	2018 2019 2007 +A1:2011 2021 2021
Safety 2014/35/UE	EN 61800-5-1 EN 60335-1 EN 60730-1	2007 +A1:2017 +A11:2021 2012 +A13:2017 +A2:2019 2017
RoHS	EN 50581	2012

10.2. UK – Declaration of conformity

Subject	Name	Version
EMC	BS EN IEC 61800-3 BS EN IEC 61000-6-2 BS EN 61000-6-3 BS EN IEC 55014-1 BS EN IEC 55014-1	2018 2019 2007 +A1:2011 2021 2021
Safety	BS EN 61800-5-1 BS EN 60335-1 BS EN 60730-1	2007 +A1:2017 +A11:2021 2012 +A13:2017 +A2:2019 2017
RoHS	BS EN 50581	2012

The instrument must be disposed of according to local electric and electronic device disposal regulations.

Manufactured by SELPRO - Fan Speed Controllers Specialist
SELPRO Srl – Via Piamarta 5/11 – 25021 Bagnolo Mella (BS) – selpro.it – info@selpro.it – Tel. +39 0306821611 – Fax +39 030622274