VTS310 3-PHASE SLAVE REGULATOR WITH MODBUS CONTROL

1. SAFETY INSTRUCTIONS

1.1. Important

- Read these instructions carefully before installation.
- Before use, follow all the installation and electrical connection instructions.
- Keep these instructions with the regulator for future use.
- Observe current technical and safety regulations.
- The controller must be professionally installed and commissioned by a qualified technician. INCORRECT installation may cause damages.
- Before turning on controller power, always check that it is correctly grounded.
- DO NOT tamper with or REMOVE internal regulator components; this NULL AND VOIDS THE WARRANTY and can cause damages.
- The user must be protected against electrical shock and the motor must be equipped with overload protection, as per current pertinent regulations.
- According to safety regulations, protection against any contact with live parts must be ensured by correct controller installation; all parts that ensure protection must be secured so as irremovable without the help of a tool.
- DO NOT turn on the regulator without the protection lid.
- NEVER touch electrical circuit parts when the power is on.
- Install the controller away from direct sunlight so as not to overheat the case.
- Make sure working conditions (working temperature, humidity, etc.) are within the indicated limits (see point 7).
- Do not install the controller near heat sources (resistances, hot air ducts, etc.) where room temperature can exceed 50 °C, devices that generate strong magnetic fields, sites subject to rain, humidity, dust, excessive mechanical vibrations or shocks.

2. DESCRIPTION OF VTS310

2.1. Overview

The VTS modbus series 3-phase regulators are designed to exclusively work via ModBus commands, that allow the Master controller to manage all parameters, both in read and write.

They are built on a Vetronite support in an IP55 grade GW PLAST box. The control zone is at the top of the board while the power zone is at the bottom.

In addition to the M1 and M2 terminal boards of the PLUG, regulation, connection and signal devices are found in the control zone.

The Vac output voltage value depends on the command percentage written by the Master controller in the specific holding register.

2.2. Key

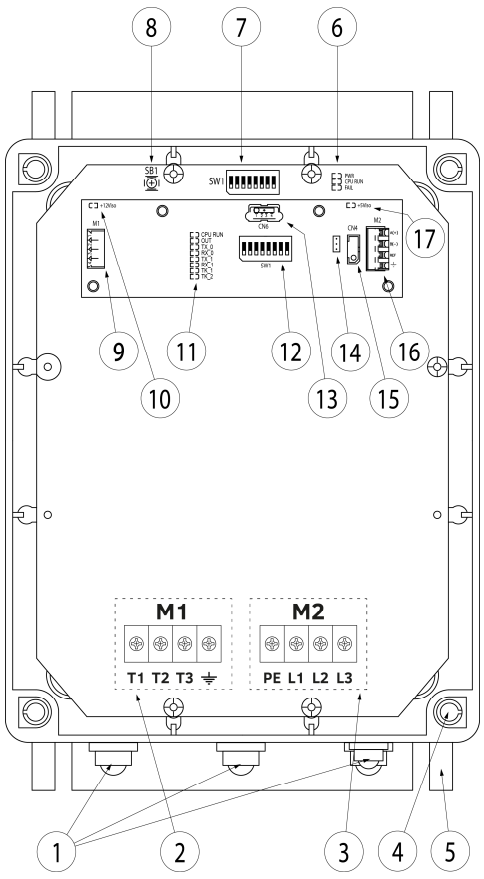

VTS310 key		
BASE board		
1	**-**	Wire clamps - connection wires
2	**M1**	Three-phase output terminal board (T1-T2-T3) + load GND
3	**M2**	Three-phase power supply terminal board (L1-L2-L3) + PE
4	**-**	TPN lock screw with max 1.8 Nm torque
5	**-**	Wall mount perforated fin
6	**DLx**	VTS regulator status signal led unit
7	**SW1**	Programming dip switch (NOT USED)
8	**SB1**	Reset button
PLUG board		
9	**M1**	Motor overload protection terminal board
10	**DL9**	12V power supply LED isolated for overload protection
11	**DLx**	CPU, OUT, modbus communication and overload protection status LED
12	**SW1**	ModBus parameter programming dip switch
13	**CN6**	USB connector for remote display connection
14	**J4**	End-of-line ModBus termination (120 Ω)
15	**CN4**	ModBus control auxiliary connector
16	**M2**	ModBus control terminal board
17	**DL10**	5V power supply led isolated for serial no. 1

2.3. Mechanical dimensions

Model	Plate data			Mechanical dimensions (mm)					Weight (*) (kg)
	A	W	IP	A	B	C	E	F	
VTS310	10	6920	55	285	200	128	154	266	2.35

(*) Packaging included

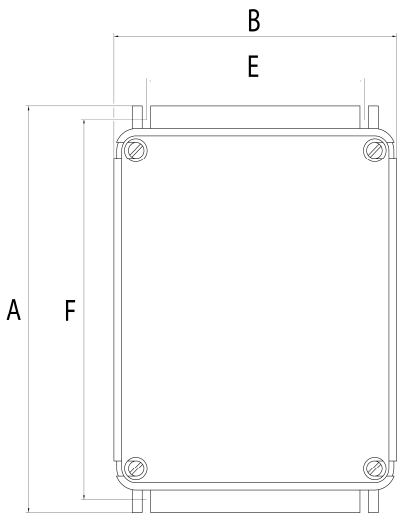

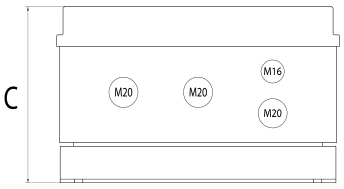

Ø Cable clamp Input		
Input	**Min**	**Max**
M20	8 mm	13 mm
M20	8 mm	13 mm
M20	8 mm	13 mm
M16	4.5 mm	10 mm
Mount	D = 5 mm	

3. INSTALLATION

3.1. Installation

Vertically install the device with the wire inlet facing down. To ensure correct heat dissipation, guarantee ≥ 50 mm clearance over and under the regulator.

Reassemble and make sure the external protection lid is fully closed.

3.2. Electrical connections

Nominal flexible cable section.

(ModBus) signal: Use ITC BELDEN 15S7D cable

Power: VTS310 ≤ 10 mm² (8 AWG)

N.B.: Protection devices: see point 8.

3.2.1. Power (L1/L2/L3/PE), load (T1/T2/T3/GND) and overload protection (TK_1/TK_2) connection

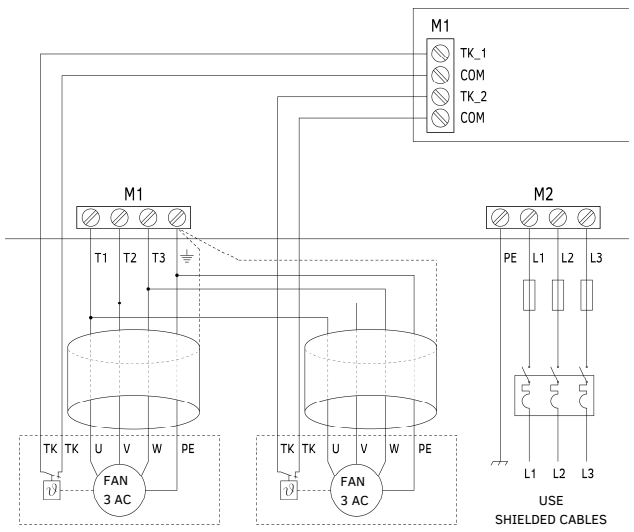

3.2.2. Command signal connections (M2 PLUG)

M2 PLUG	Terminal	Label	Description
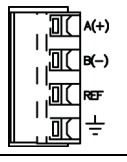	4	A(+)	Positive ModBus signal
	3	B(-)	Negative ModBus signal
	2	REF.	Reference signal
	1	GND	Grounding

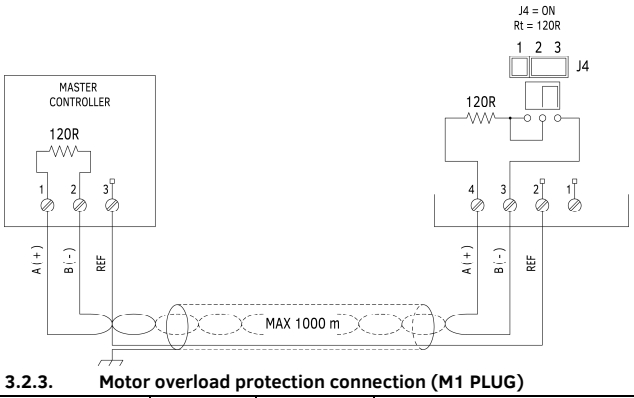

3.2.3. Motor overload protection connection (M1 PLUG)

M2 PLUG	Terminal	Label	Description
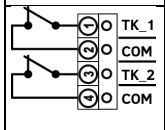	1	TK_1	Overload protection n°1
	2	COM	Overload protection n°1 reference
	3	TK_2	Overload protection n°2
	4	COM	Overload protection n°2 reference

3.2.4. Remote display connection (CN6) (Optional)

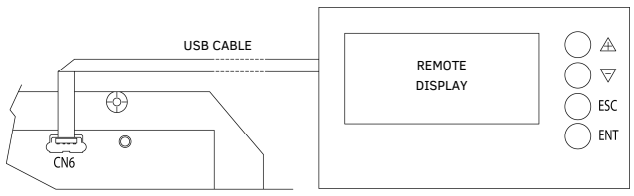

3.3. Function settings via SW1 plug (1 - 8)

SW1 status				ModBus address
1	**2**	**3**	**4**	
OFF	OFF	OFF	OFF	Address A = 1
ON	OFF	OFF	OFF	Address A = 3
…	…	…	…	…
OFF	ON	ON	OFF	Address A = 13
OFF	ON	ON	ON	Address A = 29
ON	ON	ON	ON	Address A = 31

SW1 status	ModBus Baud rate
5	
OFF	9600
ON	19200

SW1 status	ModBus communication settings
6	
OFF	8 bit , no parity, 1 stop bit
ON	8 bit , even parity, 1 stop bit

SW1 status		Emergency/Test speed
7	**8**	
OFF	OFF	0%
ON	OFF	33%
OFF	ON	66%
ON	ON	100%

Default settings are displayed on a gray background

3.3.1. SW1 plug default settings



4. FUNCTIONAL CHARACTERISTIC

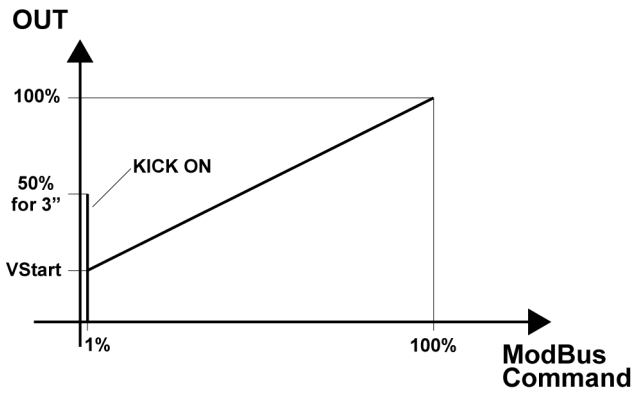

VTS310 3-PHASE SLAVE REGULATOR WITH MODBUS CONTROL

5. VTS310 REGULATOR MODBUS REGISTERS

5.1. Input register (read only)

5.1.1. I. register 100

Equipment type / Control input settings			
Byte HI: Device type		Byte LO: Input settings	
Value	Description	Value	Description
12	VTS-VST ModBus	20	ModBus input

5.1.2. I. register 101

Hw/Sw: Board used / Software Version			
Byte HI: Board code		Byte LO: Installed SW version	
81	PB1101B	Major Version	Minor Version

5.1.3. I. register 102

SW1 dip switch settings				
SW1 status				ModBus addresses
1	2	3	4	
0	0	0	0	Address = 1
1	0	0	0	Address = 3
…	…	…	…	…
0	1	1	0	Address = 13
…	…	…	…	…
0	1	1	1	Address = 29
1	1	1	1	Address = 31
SW1 status				ModBus Baud rate
5				
0				9600
1				19200
SW1 status				ModBus communication settings
6				
0				8 bit , no parity, 1 stop bit
1				8 bit , even parity, 1 stop bit
SW1 status				Emergency/Test speed
7	8			
0	0			0%
1	0			33%
0	1			66%
1	1			100%

Bits 9-16 are reserved

5.1.4. I. register 103

MBaddr: Device address on Modbus RTU	
Value	Description
1…..31	ModBus address

5.1.5. I. register 104

MBrate: Baud rate		
Value	Label	Description
19200	19200	Baud Rate 19200
9600	9600	Baud Rate 9600

5.1.6. I. register 105

MBtype: Communication settings		
Value	Label	Description
0	8N1	8 bit , no parity, 1 stop bit
1	8E1	8 bit , even parity, 1 stop bit

5.1.7. I. register 106

Internal board temperature			
Rough values	Actual values	Unit of measure	Conversion rule
0….900 (bit15 = 1 if negative)	-20.0….+90.0	°C	$80C8= -20 ; $0384 = 90

5.1.8. I. register 107

Co: Output value (in percent power voltage)			
Rough values	Actual values	Unit of measure	Conversion rule
0….100	0….100	%	0= 0% ; 100= 100%

5.1.9. I. register 108

In: ModBus Control			
Rough values	Actual values	Unit of measure	Conversion rule
0….100	0….100	%	0= 0% ; 100= 100%

5.1.10. I. register 109

Byte LO: Overload status / Byte HI: Error code	
Bit 0	Overload status TK1, 0= OK, 1= error
Bit 1	Overload status TK2, 0= OK, 1= error
Bit 2…7	Reserved
Bit 8	Board temperature > 85°C, 0= OK, 1=error. Output forced to 0%
Bit 9	No Phase, 0=OK, 1= error. Output forced to 0%
Bit 10…15	Reserved

5.2. Holding register (read and write)

N.B. The value written in holding registers is immediately run and not saved.

5.2.1. H. register 200

CMD: ModBus Master control in value 0-100%				
Rough values	Actual values	Default	Unit of measure	Conversion rule
0….100	0….100	0	%	0= 0% ; 100= 100%

5.2.2. H. register 201

Time: Maximum time between two ModBus communications N.B. Without communications for the set time, fans are controlled at emergency/test speed (see point 3.3).				
Rough values	Actual values	Default	Unit of measure	Conversion rule
1….60	1….60	10	seconds	1= 1s ; 60= 60s

5.2.3. H. register 202

Cosfi: Motor power factor N.B. Only edit the parameter with motors stopped (H. register 200=0)				
Rough values	Actual values	Default	Unit of measure	Conversion rule
0….100	0….100	40	%	0= 0% ; 100= 100%

5.2.4. H. register 203

Commands and forcing	
Bit 0	Reset microprocessor: 0= run ; 1= reset
Bit 1	Reload default values
Bit 2	Kick On: forces output 50% for 3" when H. register 200 becomes > 0
Bit 3	Kick Off: disables Kick On
Bit 4….15	Reserved

5.2.5. H. register 204

VStart: Regulation start voltage N.B. Only edit the parameter with motors stopped (H. register =0)				
Rough values	Actual values	Default	Unit of measure	Conversion rule
0….50	0….50	0	%	0= 0% ; 50= 50%

6. SIGNALS

6.1. Led

BASE board			
Led	Color	Label	Description
	GREEN	PWR	Power on (light on)
	GREEN	CPU RUN	Microprocessor running (flashing light)
	RED	FAIL	Fault alarm (flashing light) see point 6.2
PLUG board			
	GREEN	+12Viso	12V power supply isolated for overload protection (light on)
	GREEN	CPU RUN	Microprocessor running (flashing light)
	GREEN	OUT	Fan speed control (light on)
	AMBER	TX_0	ModBus master write command on (flashing light)
	AMBER	TX_1	ModBus remote display write command on (flashing light)
	AMBER	RX_0	ModBus master read command on (flashing light)
	AMBER	RX_1	ModBus remote display read command on (flashing light)
	GREEN	TK_1	Overload output 1 closed (light on)
	GREEN	TK_2	Overload output 2 closed (light on)
	GREEN	+5Viso	5V power supply isolated for serial no. 1 (light on)

6.2. Alarm flash code in order of priority

No. of flashes	Description
0 (light on)	Insufficient power supply Phase loss (L2, L3)
1	Board temperature over limit (> 85 °C)
2	Phase loss (L1)

N.B. When an alarm trips, DL2 remains off to facilitate counting DL3 flashes

7. TECHNICAL SPECIFICATIONS

7.1. Power supply

Voltage: 400 Vac (±10%) three-phase
Frequency: 50/60 Hz automatically recognized
Surge: for installation category II (4 kV)
(> 500 Vac surge filters ON)
Electrical mains: Monitoring on all 3 phases

7.2. Ground connection

The VTS310 regulator is compatible with ground connections **IT-TT-TN**

7.3. Current

Load current: 10 A < 50 °C; > 50 °C -0.6 A/°C
Overload current: 150% of rated current
(max 10'' every 3')

7.4. Power

Absorbed: 5 V A (command circuits)
Dissipated in room: 40 W @ 10 A
Functional characteristic: SLAVE regulator with ModBus command

7.5. Input signals and contacts

Command channel RS485 (M2 PLUG): RS485 isolated, with ModBus-RTU slave protocol for remote control.
Service channel RS485 (CN4): RS485 not isolated with ModBus-RTU master protocol for remote display (see point 3.2.4)
Motor overload protection contacts (M1 PLUG) Terminal board for connection of 2 overload protections TK_1 and TK_2 (see point 3.2.3)

7.6. Output signals and contacts

Motor drive and overload read: One four-pole terminal board to drive three-phase motors
A four-pole terminal board to read overload status

7.7. Alarms

Command input: No ModBus communications
Fans are driven at emergency speed set by plug SW1.
Regulator: Working temperature control with internal probe (T > 85 °C).
No phase control.

7.8. Protections

Surge: As per EN 61000-4-5: surge category II (4 kV).
Internal temperature: Internal heat protection.

7.9. Case

Materials: GW-PLAST 75 (temperature < 85 °C) and aluminum.
Pollution: high pollution
Fire resistance: category D.
Protection grade: IP55

7.10. Insulation

Case: Class I (use of grounded protection conductor).
Command: 4000 V between command input and mains voltage parts.

7.11. Working conditions

Working temperature: from -20 °C to 50 °C
Storage temperature: from -25 °C to 65 °C
Humidity: from 0% to 85% non-condensing relative humidity
Vibrations: ≤ 1 g (9.8 m/s²)

7.12. Assembly

Assembly: Wall mount in vertical position only

8. CIRCUIT BREAKER AND SHORT CIRCUIT PROTECTION

To protect the controller power module from severe short-circuits or overloads, it is imperative to use semiconductor protection fuses with a suitable I2t value fitted upstream of the controller.

Model	Circuit breaker	Protection fuses - SRC			
		Type	Vac	Amp	P/N
VTS310	**16 A**	10x38	690	16	FR10GR69V16

For additional protection, a circuit breaker with a C-curve can be used, mounted upstream of the controller.
The installer must install these protections.

Surge arrester:
Electrical protection inserted between the regulator power supply and grounding, that protects the device from transitory power surges.

Attention:
Disconnect the faston contact from the ground reference, in the electrical rigidity test.

Attention:
For DIFFERENTIAL protection systems, use components with grounded current dispersion ≥ 60 mA

VTS has a grounded current dispersion of about 4 mA

9. MANUFACTURER'S DECLARATION

This controller was designed and constructed for use in industrial environments and meets the following community directives:

- Low Voltage Directive (LVD) 2014/35/EU
- Electromagnetic Compatibility Directive (EMC) 2014/30/EU

10. DIRECTIVES AND TECHNICAL STANDARDS

The essential directive requirements are met by compliance with product standards.

10.1. CE – Declaration of conformity

Directive	Standard code	Version
EMC 2014/30/EU	EN 55014-1	2021
	EN 55014-2	1997 + A1:2001 + IS1:2007 + A2:2008
	EN 61000-3-2	2014
	EN 61000-3-3	2013
	EN 61000-6-2	2019
	EN 61000-6-3	2007 +A1:2011
	EN 61800-3	2018
Safety 2014/35/EU	EN 60335-1	2012 +A13:2017 +A2:2019
	EN 60730-1	2017
	EN 61800-5-1	2007 +A1:2017 +A11:2021
RoHS	EN 50581	2012

10.2. UK – Declaration of conformity

Subject	Name	Version
EMC	BS EN 55014-1	2021
	BS EN 55014-2	1997 + A1:2001 + IS1:2007 + A2:2008
	BS EN 61000-3-2	2014
	BS EN 61000-3-3	2013
	BS EN 61000-6-2	2019
	BS EN 61000-6-3	2007 +A1:2011
	BS EN 61800-3	2018
Safety	BS EN 60335-1	2012 +A13:2017 +A2:2019
	BS EN 60730-1	2017
	BS EN 61800-5-1	2007 +A1:2017 +A11:2021
RoHS	BS EN 50581	2012

With reference to EMC compatibility, according to markings:

The instrument must be disposed of according to local electric and electronic device disposal regulations.