VTM300 MASTER 3-PHASE REGULATOR

1. SAFETY INSTRUCTIONS

1.1. Important

- Read these instructions carefully before installation.
- Before use, follow all the installation and electrical connection instructions.
- Keep these instructions with the regulator for future use.
- Observe current technical and safety regulations.
- The controller must be professionally installed and commissioned by a qualified technician. INCORRECT installation may cause damages.
- Before turning on controller power, always check that it is correctly grounded.
- DO NOT tamper with or REMOVE internal regulator components; this NULL AND VOIDS THE WARRANTY and can cause damages.
- The user must be protected against electrical shock and the motor must be equipped with overload protection, as per current pertinent regulations.
- According to safety regulations, protection against any contact with live parts must be ensured by correct controller installation; all parts that ensure protection must be secured so as irremovable without the help of a tool.
- DO NOT turn on the regulator without the protection lid.
- NEVER touch electrical circuit parts when the power is on.
- Install the controller away from direct sunlight so as not to overheat the case.
- Make sure working conditions (working temperature, humidity, etc.) are within the indicated limits (see point 7).
- Do not install the controller near heat sources (resistances, hot air ducts, etc.) where room temperature can exceed 50 °C, devices that generate strong magnetic fields, sites subject to rain, humidity, dust, excessive mechanical vibrations or shocks.

2. DESCRIPTION OF VTM300

2.1. Overview

The VTM series three-phase regulators are built on a Vetronite support in an IP55 grade GW PLAST box. The control zone is at the top of the board while the power zone is at the bottom.
In addition to the M1, M3 and M4 terminal boards, regulation, connection and signal devices are found in the control zone.
Fan speed control varies to maintain the value measured by the transducer or probe within the P.B. proportional band.
Output increases as input increases.
N.B. The S.P. setpoint is at the center of the proportional band.

2.2. Key

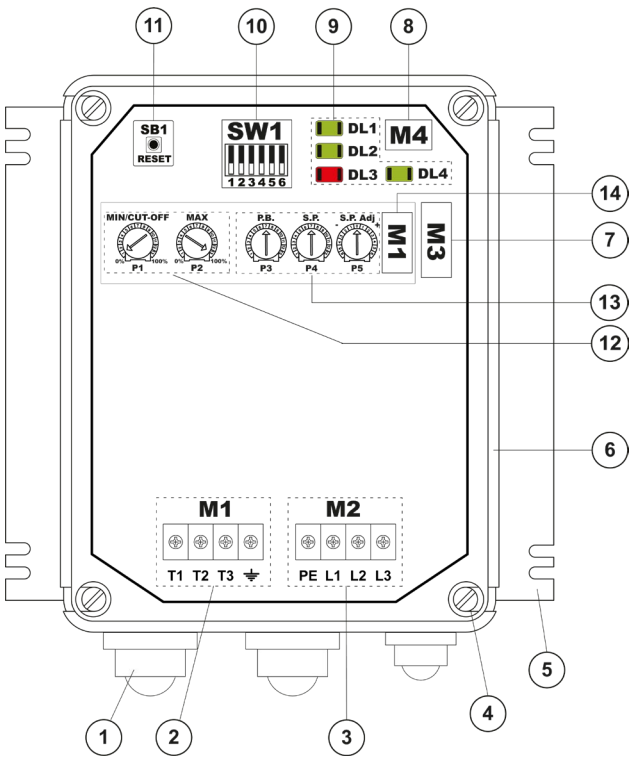

VTM300 Key		
BASE board		
1	**-**	Cable clamps - connection cables
2	**M1**	Three-phase output terminal board (T1-T2-T3) + load GND
3	**M2**	Three-phase power supply terminal board (L1-L2-L3) + PE
4	**-**	TPN lock screw with max torque 1.8 N m
5	**-**	Wall mount perforated fin
6	**-**	GW PLAST case
7	**M3**	Command input terminal board
8	**M4**	Alarm relay terminal board
9	**DL..**	Signal led
10	**SW1**	Programming dip switch
11	**SB1**	Reset button
PLUG board		
12	**P1**	Minimum voltage settings (MIN / CUT-OFF)
	P2	Maximum voltage settings (MAX)
13	**P3**	Proportional band settings (P.B.)
	P4	Setpoint settings (S.P.)
	P5	Setpoint fine tuning (S.P. Adj.)
14	**M1**	Motor overload protection (TK) and Start/Stop (S2) terminal board

2.3. Mechanical dimensions

Model	Plate data			Mechanical dimensions						Weight(*)
	A	kV A	IP	A	B	C	D	E	F	Kg
VTM308	8	5.5	55	254	235	114	200	213	-	2.3
VTM312	12	8	55	254	230	128	200	213	170	2.5
VTM320	20	14	55	254	230	158	200	213	170	3.8

(*) Packaging included

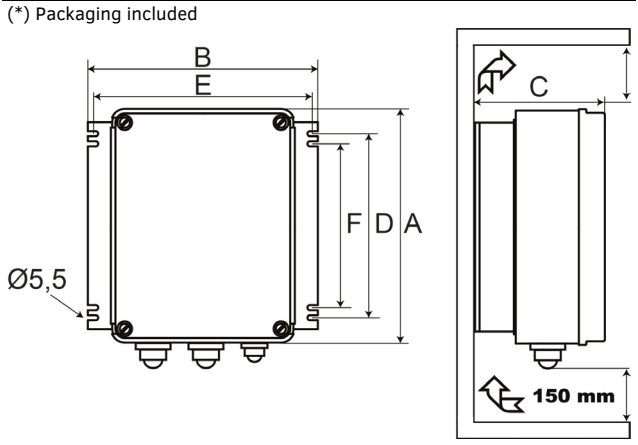

3. INSTALLATION

3.1. INSTALLATION

Vertically install the controller with the wire inlet facing down. To permit correct heat dissipation, guarantee ≥150 mm clearance over and under the regulator.
Reassemble and make sure the external protection lid is fully closed.

3.2. Electrical connections

Nominal flexible cable section.
Signal ≤ 1.5 mm² (16 AWG)
Power (output): VTM 308/312/320 ≤ 10 mm² (8 AWG)
Power (supply): VTM 308/312/320 ≤ 10 mm² (8 AWG)
N.B. Protection devices: see point 8.

3.2.1. Power (L1/L2/L3/PE) and load (T1/T2/T3/GND) connection:

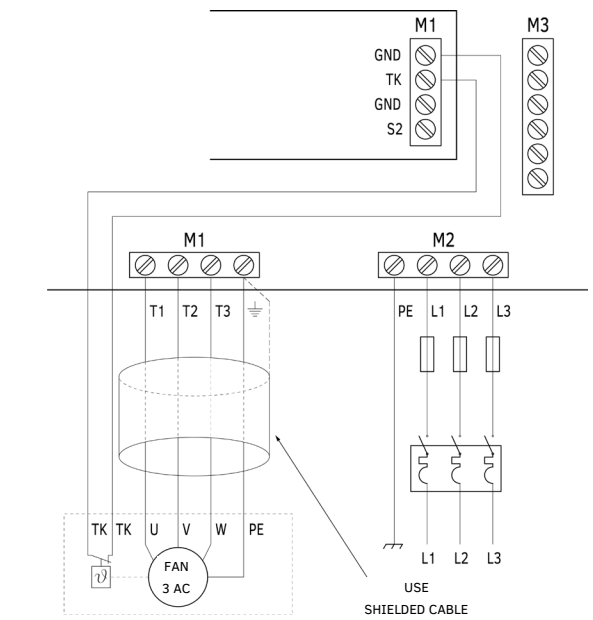

(*) Upon request, the regulator can be set to directly connect no. 4 fans (three-phase + ground).
Power (output): VTM 308/312/320 ≤ 2.5 mm² (13 AWG)

3.2.2. Command signal connections (M3)

M3	Terminal	Label	Description
	6	GND	Reference grounding
	5	S0	ON-OFF input (see point 3.3.3)
	4	VR	Reference voltage output +5.0 Vdc (±1.0%)
	3	+V	Power voltage output +22 Vdc (±20%)
	2	GND	Reference grounding
	1	IN	Transducer signal input

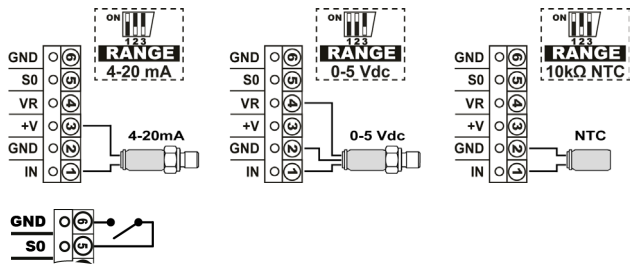

3.2.3. Alarm relay connection (M4)

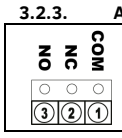

Terminal	Label	Description
3	NO	Normally open contact
2	NC	Normally closed contact
1	COM	Shared terminal

3.2.4. Auxiliary ON-OFF contact connection (M1 plug)

M1 plug	Terminal	Label	Description
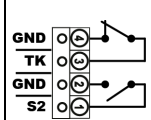	4	GND	TK contact reference
	3	TK	Overload control function Closed=Start Open=Stop
	2	GND	S2 contact reference
	1	S2	Start/Stop function Closed=Stop Open=Start

3.3. Function settings via SW1 (1 - 8)

SW1	Description
1,2,3	Command signal selection (see point 3.3.2)
4	ON = P1 **CUT-OFF** voltage setting OFF = P1 **(MIN) minimum** voltage settings
5	S0 input function selection (see point 3.3.3)
6,7,8	Reserved; keep on OFF

CAUTION: Press button SB1 after changing SW1 settings to apply changes.

3.3.1. SW1 default configuration

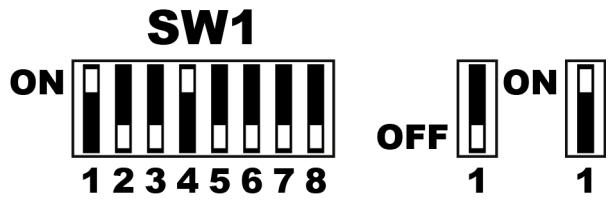

3.3.2. Command input function programming

SW1-1	SW1-2	SW1-3	Description
ON	OFF	OFF	Transducer 4–20 mA
ON	ON	OFF	Transducer 0-5 V
ON	OFF	ON	Sensor NTC 10 kΩ 25 °C
ON	ON	ON	Cos Phi(*) calibration (reserved)

(*) During calibration of the Cos Phi, the CPU RUN led flashes at twice the normal speed

3.3.3. Functional programming for the ON-OFF input (S0)

SW1-5	Description
OFF	Override of output to MAX value (closed = MAX (P2))
ON	Override of output to 100% (closed = 100%))

4. FUNCTIONAL CHARACTERISTIC

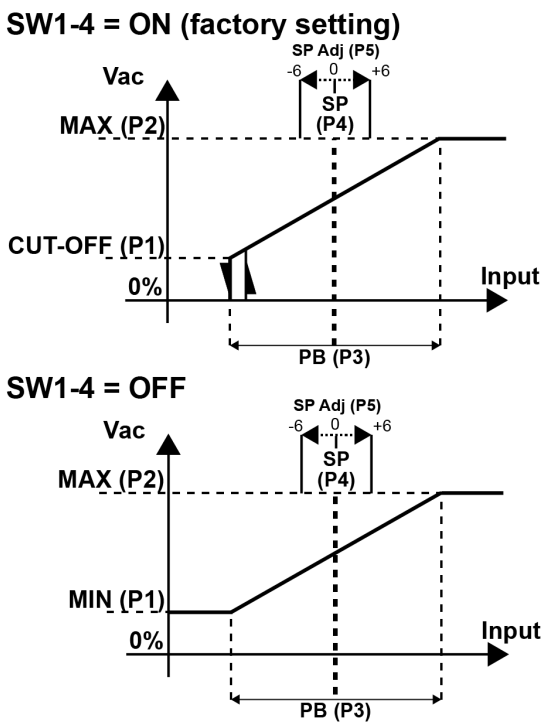

5. TRIMMER SETTINGS

5.1. Regulation limits

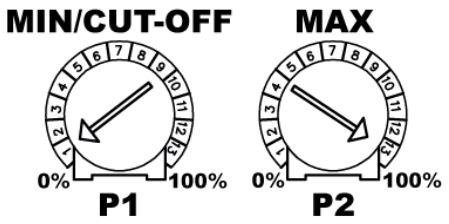

Trimmer	Label	Description
P1	**MIN/ CUT-OFF**	**Use as minimum voltage (MIN)** SW1-4 = OFF (range from 0-100%). Turn P1 clockwise to the required minimum voltage.
		Use as CUT-OFF (shutdown point) SW1-4 = ON (range from 0-100%) Once the minimum voltage is set, turn SW1-4 ON and press SB1 (reset). Cut-Off will be set to minimum voltage.
P2	**MAX**	Maximum speed limit settings (range 0–100%)

5.2. Proportional band and setpoint settings

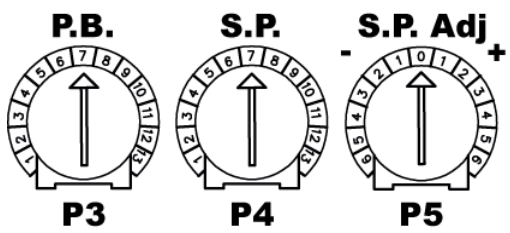

	Description
P.B.	Proportional band settings (see point 5.5)
S.P.	Setpoint settings (see point 5.3)
S.P. Adj	Setpoint fine tuning settings (see point 5.3)

Manufactured by SELPRO - Fan Speed Controllers Specialist
SELPRO Srl – Via Piamarta 5/11 – 25021 Bagnolo Mella (BS) – selpro.it – info@selpro.it – Tel. +39 0306821611 – Fax +39 030622274

VTM300 MASTER 3-PHASE REGULATOR

5.3. P4 (S.P.) Setpoint and P5 (S.P.Adj) fine tuning

The setpoint value is given by adding or subtracting S.P. Adj. with S.P. The setpoint is at the center of the proportional band.

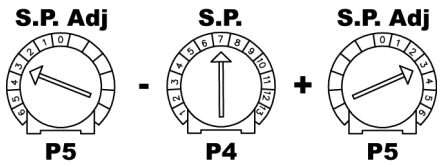

5.4. Range S.P. and S.P. Adj

5.4.1. Scale 4–20 mA

- S.P. Adj						mA		+ S.P. Adj					
-6	-5	-4	-3	-2	-1	SP		+1	+2	+3	+4	+5	+6
5.4	5.5	5.6	5.7	5.8	5.9	**1**	**6**	6.1	6.2	6.3	6.4	6.5	**6.6**
6.4	6.5	6.6	6.7	6.8	6.9	**2**	**7**	7.1	7.2	7.3	7.4	7.5	**7.6**
7.4	7.5	7.6	7.7	7.8	7.9	**3**	**8**	8.1	8.2	8.3	8.4	8.5	**8.6**
8.4	8.5	8.6	8.7	8.8	8.9	**4**	**9**	9.1	9.2	9.3	9.4	9.5	**9.6**
9.4	9.5	9.6	9.7	9.8	9.9	**5**	**10**	10.1	10.2	10.3	10.4	10.5	**10.6**
10.4	10.5	10.6	10.7	10.8	10.9	**6**	**11**	11.1	11.2	11.3	11.4	11.5	**11.6**
11.4	11.5	11.6	11.7	11.8	11.9	**7**	**12**	12.1	12.2	12.3	12.4	12.5	**12.6**
12.4	12.5	12.6	12.7	12.8	12.9	**8**	**13**	13.1	13.2	13.3	13.4	13.5	**13.6**
13.4	13.5	13.6	13.7	13.8	13.9	**9**	**14**	14.1	14.2	14.3	14.4	14.5	**14.6**
14.4	14.5	14.6	14.7	14.8	14.9	**10**	**15**	15.1	15.2	15.3	15.4	15.5	**15.6**
15.4	15.5	15.6	15.7	15.8	15.9	**11**	**16**	16.1	16.2	16.3	16.4	16.5	**16.6**
16.4	16.5	16.6	16.7	16.8	16.9	**12**	**17**	17.1	17.2	17.3	17.4	17.5	**17.6**
17.4	17.5	17.6	17.7	17.8	17.9	**13**	**18**	18.1	18.2	18.3	18.4	18.5	**18.6**

5.4.2. Scale 0–15 bar

- S.P. Adj						bar		+ S.P. Adj					
-6	-5	-4	-3	-2	-1	SP		+1	+2	+3	+4	+5	+6
1.31	1.41	1.50	1.59	1.69	1.78	**1**	**1.88**	1.97	2.06	2.16	2.25	2.34	**2.44**
2.25	2.34	2.44	2.53	2.63	2.72	**2**	**2.81**	2.91	3.00	3.09	3.19	3.28	**3.38**
3.19	3.28	3.38	3.47	3.56	3.66	**3**	**3.75**	3.84	3.94	4.03	4.13	4.22	**4.31**
4.13	4.22	4.31	4.41	4.50	4.59	**4**	**4.69**	4.78	4.88	4.97	5.06	5.16	**5.25**
5.06	5.16	5.25	5.34	5.44	5.53	**5**	**5.63**	5.72	5.81	5.91	6.00	6.09	**6.19**
6.00	6.09	6.19	6.28	6.38	6.47	**6**	**6.56**	6.66	6.75	6.84	6.94	7.03	**7.13**
6.94	7.03	7.13	7.22	7.31	7.41	**7**	**7.50**	7.59	7.69	7.78	7.88	7.97	**8.06**
7.88	7.97	8.06	8.16	8.25	8.34	**8**	**8.44**	8.53	8.63	8.72	8.81	8.91	**9.00**
8.81	8.91	9.00	9.09	9.19	9.28	**9**	**9.38**	9.47	9.56	9.66	9.75	9.84	**9.94**
9.75	9.84	9.94	10.03	10.13	10.22	**10**	**10.31**	10.41	10.50	10.59	10.69	10.78	**10.88**
10.69	10.78	10.88	10.97	11.06	11.16	**11**	**11.25**	11.34	11.44	11.53	11.63	11.72	**11.81**
11.63	11.72	11.81	11.91	12.00	12.09	**12**	**12.19**	12.28	12.38	12.47	12.56	12.66	**12.75**
12.56	12.66	12.75	12.84	12.94	13.03	**13**	**13.13**	13.22	13.31	13.41	13.50	13.59	**13.69**

5.4.3. Scale 0-25 bar

- S.P. Adj						bar		+ S.P. Adj					
-6	-5	-4	-3	-2	-1	SP		+1	+2	+3	+4	+5	+6
2.19	2.34	2.50	2.66	2.81	2.97	**1**	**3.13**	3.28	3.44	3.59	3.75	3.91	**4.06**
3.75	3.91	4.06	4.22	4.38	4.53	**2**	**4.69**	4.84	5.00	5.16	5.31	5.47	**5.63**
5.31	5.47	5.63	5.78	5.94	6.09	**3**	**6.25**	6.41	6.56	6.72	6.88	7.03	**7.19**
6.88	7.03	7.19	7.34	7.50	7.66	**4**	**7.81**	7.97	8.13	8.28	8.44	8.59	**8.75**
8.44	8.59	8.75	8.91	9.06	9.22	**5**	**9.38**	9.53	9.69	9.84	10.00	10.16	**10.31**
10.00	10.16	10.31	10.47	10.63	10.78	**6**	**10.94**	11.09	11.25	11.41	11.56	11.72	**11.88**
11.56	11.72	11.88	12.03	12.19	12.34	**7**	**12.50**	12.66	12.81	12.97	13.13	13.28	**13.44**
13.13	13.28	13.44	13.59	13.75	13.91	**8**	**14.06**	14.22	14.38	14.53	14.69	14.84	**15.00**
14.69	14.84	15.00	15.16	15.31	15.47	**9**	**15.63**	15.78	15.94	16.09	16.25	16.41	**16.56**
16.25	16.41	16.56	16.72	16.88	17.03	**10**	**17.19**	17.34	17.50	17.66	17.81	17.97	**18.13**
17.81	17.97	18.13	18.28	18.44	18.59	**11**	**18.75**	18.91	19.06	19.22	19.38	19.53	**19.69**
19.38	19.53	19.69	19.84	20.00	20.16	**12**	**20.31**	20.47	20.63	20.78	20.94	21.09	**21.25**
20.94	21.09	21.25	21.41	21.56	21.72	**13**	**21.88**	22.03	22.19	22.34	22.50	22.66	**22.81**

5.4.4. Scale 0-30 bar

- S.P. Adj						bar		+ S.P. Adj					
-6	-5	-4	-3	-2	-1	SP		+1	+2	+3	+4	+5	+6
2.63	2.81	3.00	3.19	3.38	3.56	**1**	**3.75**	3.94	4.13	4.31	4.50	4.69	**4.88**
4.50	4.69	4.88	5.06	5.25	5.44	**2**	**5.63**	5.81	6.00	6.19	6.38	6.56	**6.75**
6.38	6.56	6.75	6.94	7.13	7.31	**3**	**7.50**	7.69	7.88	8.06	8.25	8.44	**8.63**
8.25	8.44	8.63	8.81	9.00	9.19	**4**	**9.38**	9.56	9.75	9.94	10.13	10.31	**10.50**
10.13	10.31	10.50	10.69	10.88	11.06	**5**	**11.25**	11.44	11.63	11.81	12.00	12.19	**12.38**
12.00	12.19	12.38	12.56	12.75	12.94	**6**	**13.13**	13.31	13.50	13.69	13.88	14.06	**14.25**
13.88	14.06	14.25	14.44	14.63	14.81	**7**	**15.00**	15.19	15.38	15.56	15.75	15.94	**16.13**
15.75	15.94	16.13	16.31	16.50	16.69	**8**	**16.88**	17.06	17.25	17.44	17.63	17.81	**18.00**
17.63	17.81	18.00	18.19	18.38	18.56	**9**	**18.75**	18.94	19.13	19.31	19.50	19.69	**19.88**
19.50	19.69	19.88	20.06	20.25	20.44	**10**	**20.63**	20.81	21.00	21.19	21.38	21.56	**21.75**
21.38	21.56	21.75	21.94	22.13	22.31	**11**	**22.50**	22.69	22.88	23.06	23.25	23.44	**23.63**
23.25	23.44	23.63	23.81	24.00	24.19	**12**	**24.38**	24.56	24.75	24.94	25.13	25.31	**25.50**
25.13	25.31	25.50	25.69	25.88	26.06	**13**	**26.25**	26.44	26.63	26.81	27.00	27.19	**27.38**

5.4.5. Scale 0-45 bar

- S.P. Adj						bar		+ S.P. Adj					
-6	-5	-4	-3	-2	-1	SP		+1	+2	+3	+4	+5	+6
3.94	4.22	4.50	4.78	5.06	5.34	**1**	**5.63**	5.91	6.19	6.47	6.75	7.03	**7.31**
6.75	7.03	7.31	7.59	7.88	8.16	**2**	**8.44**	8.72	9.00	9.28	9.56	9.84	**10.13**
9.56	9.84	10.13	10.41	10.69	10.97	**3**	**11.25**	11.53	11.81	12.09	12.38	12.66	**12.94**
12.38	12.66	12.94	13.22	13.50	13.78	**4**	**14.06**	14.34	14.63	14.91	15.19	15.47	**15.75**
15.19	15.47	15.75	16.03	16.31	16.59	**5**	**16.88**	17.16	17.44	17.72	18.00	18.28	**18.56**
18.00	18.28	18.56	18.84	19.13	19.41	**6**	**19.69**	19.97	20.25	20.53	20.81	21.09	**21.38**
20.81	21.09	21.38	21.66	21.94	22.22	**7**	**22.50**	22.78	23.06	23.34	23.63	23.91	**24.19**
23.63	23.91	24.19	24.47	24.75	25.03	**8**	**25.31**	25.59	25.88	26.16	26.44	26.72	**27.00**
26.44	26.72	27.00	27.28	27.56	27.84	**9**	**28.13**	28.41	28.69	28.97	29.25	29.53	**29.81**
29.25	29.53	29.81	30.09	30.38	30.66	**10**	**30.94**	31.22	31.50	31.78	32.06	32.34	**32.63**
32.06	32.34	32.63	32.91	33.19	33.47	**11**	**33.75**	34.03	34.31	34.59	34.88	35.16	**35.44**
34.88	35.16	35.44	35.72	36.00	36.28	**12**	**36.56**	36.84	37.13	37.41	37.69	37.97	**38.25**
37.69	37.97	38.25	38.53	38.81	39.09	**13**	**39.38**	39.66	39.94	40.22	40.50	40.78	**41.06**

5.4.6. Scale 0–5 Vdc

- S.P. Adj						Vdc		+ S.P. Adj					
-6	-5	-4	-3	-2	-1	SP		+1	+2	+3	+4	+5	+6
0.32	0.35	0.38	0.41	0.44	0.47	**1**	**0.50**	0.53	0.56	0.59	0.62	0.65	**0.68**
0.65	0.68	0.71	0.74	0.77	0.80	**2**	**0.83**	0.86	0.89	0.92	0.95	0.98	**1.01**
0.99	1.02	1.05	1.08	1.11	1.14	**3**	**1.17**	1.20	1.23	1.26	1.29	1.32	**1.35**
1.32	1.35	1.38	1.41	1.44	1.47	**4**	**1.50**	1.53	1.56	1.59	1.62	1.65	**1.68**
1.65	1.68	1.71	1.74	1.77	1.80	**5**	**1.83**	1.86	1.89	1.92	1.95	1.98	**2.01**
1.99	2.02	2.05	2.08	2.11	2.14	**6**	**2.17**	2.20	2.23	2.26	2.29	2.32	**2.35**
2.32	2.35	2.38	2.41	2.44	2.47	**7**	**2.50**	2.53	2.56	2.59	2.62	2.65	**2.68**
2.65	2.68	2.71	2.74	2.77	2.80	**8**	**2.83**	2.86	2.89	2.92	2.95	2.98	**3.01**
2.99	3.02	3.05	3.08	3.11	3.14	**9**	**3.17**	3.20	3.23	3.26	3.29	3.32	**3.35**
3.32	3.35	3.38	3.41	3.44	3.47	**10**	**3.50**	3.53	3.56	3.59	3.62	3.65	**3.68**
3.65	3.68	3.71	3.74	3.77	3.80	**11**	**3.83**	3.86	3.89	3.92	3.95	3.98	**4.01**
3.99	4.02	4.05	4.08	4.11	4.14	**12**	**4.17**	4.20	4.23	4.26	4.29	4.32	**4.35**
4.32	4.35	4.38	4.41	4.44	4.47	**13**	**4.50**	4.53	4.56	4.59	4.62	4.65	**4.68**

5.4.7. Scale NTC 10-60 °C

- S.P. Adj						°C		+ S.P. Adj					
-6	-5	-4	-3	-2	-1	SP		+1	+2	+3	+4	+5	+6
2.00	2.50	3.00	3.50	4.00	4.50	**1**	**5.00**	5.50	6.00	6.50	7.00	7.50	**8.00**
7.00	7.50	8.00	8.50	9.00	9.50	**2**	**10.00**	10.50	11.00	11.50	12.00	12.50	**13.00**
12.00	12.50	13.00	13.50	14.00	14.50	**3**	**15.00**	15.50	16.00	16.50	17.00	17.50	**18.00**
17.00	17.50	18.00	18.50	19.00	19.50	**4**	**20.00**	20.50	21.00	21.50	22.00	22.50	**23.00**
22.00	22.50	23.00	23.50	24.00	24.50	**5**	**25.00**	25.50	26.00	26.50	27.00	27.50	**28.00**
27.00	27.50	28.00	28.50	29.00	29.50	**6**	**30.00**	30.50	31.00	31.50	32.00	32.50	**33.00**
32.00	32.50	33.00	33.50	34.00	34.50	**7**	**35.00**	35.50	36.00	36.50	37.00	37.50	**38.00**
37.00	37.50	38.00	38.50	39.00	39.50	**8**	**40.00**	40.50	41.00	41.50	42.00	42.50	**43.00**
42.00	42.50	43.00	43.50	44.00	44.50	**9**	**45.00**	45.50	46.00	46.50	47.00	47.50	**48.00**
47.00	47.50	48.00	48.50	49.00	49.50	**10**	**50.00**	50.50	51.00	51.50	52.00	52.50	**53.00**
52.00	52.50	53.00	53.50	54.00	54.50	**11**	**55.00**	55.50	56.00	56.50	57.00	57.50	**58.00**
57.00	57.50	58.00	58.50	59.00	59.50	**12**	**60.00**	60.50	61.00	61.50	62.00	62.50	**63.00**
62.00	62.50	63.00	63.50	64.00	64.50	**13**	**65.00**	65.50	66.00	66.50	67.00	67.50	**68.00**

5.5. P3 (P.B.) proportional band

Proportional band based on position

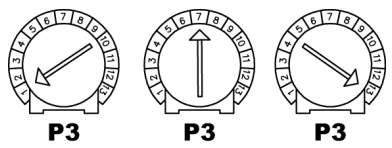

Scale	Position 1	Position 7	Position 13
4–20 mA	1.4 mA	2.6 mA	3.8 mA
0–15 bar	1.3 bar	2.4 bar	3.6 bar
0-25 bar	2.2 bar	4.1 bar	5.9 bar
0-30 bar	2.6 bar	4.9 bar	7.1 bar
0-45 bar	3.9 bar	7.3 bar	10.7 bar
0.5–4.5 Vdc	0.5 Vdc	0.8 Vdc	1.1 Vdc
10–60 °C	3.5 °C	7.5 °C	10.5 °C

5.6. Example of S.P. and P.B. settings with transducer 0-30 bar

If the setpoint is set to 18 bar with 4.9 bar band, the three regulation trimmers must be set as follows:

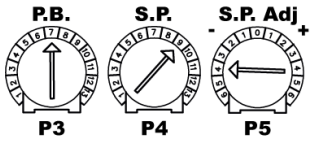

6. SIGNALS

6.1. Led

LED	COLOR	LABEL	DESCRIPTION
DL1	GREEN	PWR	Power on (light on)
DL2	GREEN	CPU RUN	Microprocessor running (flashing light)
DL3	RED	FAIL	Fault alarm (flashing light) (see point 6.2)
DL4	GREEN	-	RL1 relay excited (light on)

6.2. Alarm flash code (DL3) in order of priority

NR. FLASHES	DESCRIPTION
0 (light on)	Insufficient power supply Phase loss (L2, L3)
1	Board temperature over limit (> 85 °C)
2	Phase loss (L1)
3	T.K. contact open
4	Input signal over range
5	Input signal under range
6	Incorrect dip switch settings

N.B. When an alarm trips, DL2 remains off to facilitate counting DL3 flashes

7. TECHNICAL SPECIFICATIONS

7.1. Power supply

Voltage: 400 Vac (±10%) three-phase (230/480 Vac upon request)
Frequency: 50/60 Hz automatic frequency recognition
Surge: For installation category II (4 kV)
(> 500 Vac surge filters ON)
Electrical mains: Monitoring on all 3 phases

7.2. Ground connections

VTM300 regulators are compatible with ground connections **IT-TT-TN**

7.3. Current

Rated Current (RMS) @ 50 °C room temperature:

VTM308	8 A < 50 °C	> 50 °C -0,6 A/°C
VTM312	12 A < 50 °C	> 50 °C -0,6 A/°C
VTM320	20 A < 50 °C	> 50 °C -0,6 A/°C

Overload: 150% of rated current (=10" every 3")

7.4. Power

Absorbed: 5 V A (command circuits)
Dissipated in room:

VTM308	32 W @ 8 A
VTM312	48 W @ 12 A
VTM320	72 W @ 20 A

Functional characteristic: MASTER regulator
Direct function; output increases as input increases

7.5. Input signals and contacts

Analog: 0-5 Vdc (Ri = 10 kΩ)
4-20 mA (Ri = 100 Ω)
NTC 10 kΩ @ 25 °C
Voltage-free contact "ON-OFF": Programmable S0 contact (see point 3.3.3)
Dedicated TK contact (M1 plug terminal board)
Dedicated S2 contact (M1 plug terminal board)

7.6. Output signals and contacts

Auxiliary power: 22 Vdc (±20%), ≤ 20 mA not stabilized and protected against short circuit
5.0 Vdc (±1.0%), ≤ 20 mA protected against short circuit
RL1 relay: COM, NC and NO contacts for alarm
3 A @ 250 Vac – 3 A @ 30 Vdc

7.7. Alarms

Command input: 0-5 Vdc: Vin ≤ 5.5 Vdc
4-20 mA: 2 mA ≤ Iin ≤ 24 mA
NTC in the event of short circuit (or T < 0 °C) and cut off (or T > 85 °C)
Mains supervision: Phase loss
Regulator: Working temperature control with internal probe (T > 85 °C)

7.8. Protections

Surge: As per EN61000-4-5: surge category II (4 kV)
Auxiliary power: With PTC sensor for protection against short-circuit
Internal temperature: Internal heat protection

7.9. Case

Materials: GWPLAST 75 (temperature < 85 °C) and aluminum
Pollution: High pollution
Fire resistance: Category D

7.10. Insulation:

Case: Class I (use of grounded protection conductor)
Command: 4000 Vac between command input and mains voltage parts

7.11. Working conditions

Working temperature: From -20 °C to 50 °C; use contact S2 if T ≤ -10 °C
Storage temperature: From -25 °C to 65 °C
Humidity: From 0% to 85% non-condensing relative humidity
Vibrations: ≤ 1 g (9.8 m/s²)

7.12. Assembly

Assembly: Wall mount in vertical position only

8. CIRCUIT BREAKER AND SHORT CIRCUIT PROTECTION

To protect the controller power module from severe short-circuits or overloads, it is imperative to use semiconductor protection fuses with a suitable I2t value fitted upstream of the controller.

Model	Circuit breaker	Protection fuses - SRC			
		Type	Vac	Amp	P/N
VTM308	**16 A**	10x38	690	16	FR10GB69V16
VTM312	**24 A**	10x38		16	FR10GB69V16
VTM320	**40 A**	14x51		25	FR10GB69V25

For additional protection, a circuit breaker with a C-curve can be used, mounted upstream of the controller.
The installer must install these protections.

Surge arrester:
Electrical protection inserted between the regulator power supply and grounding, that protects the device from transitory power surges up to 480 Vac.

Warning:
Disconnect the faston contact from the ground reference, in the electrical rigidity test.

Warning:
For DIFFERENTIAL protection systems, use components with grounded current dispersion ≥ 60 mA.

VTM300 has a grounded current dispersion of about 4 mA.

9. MANUFACTURER'S DECLARATION

The VTM300 controller was designed and constructed for use in industrial environments and meets the following community directives:

- Low Voltage Directive (LVD) 2014/35/EU;
- Electromagnetic Compatibility Directive (EMC) 2014/30/EU.

10. DIRECTIVES AND TECHNICAL STANDARDS

The essential directive requirements are met by compliance with "generic standards" for the industrial environment.

10.1. CE – Declaration of conformity

Directive	CE standard code	Version
EMC 2014/30/UE	EN IEC 61800-3	2018
	EN IEC 61000-6-2	2019
	EN 61000-6-3	2007 +A1:2011
	EN IEC 55014-1	2021
	EN IEC 55014-1	2021
Safety 2014/35/UE	EN 61800-5-1	2007 +A1:2017 +A11:2021
	EN 60335-1	2012 +A13:2017 +A2:2019
	EN 60730-1	2017
RoHS	EN 50581	2012

10.2. UK – Declaration of conformity

Subject	Name	Version
EMC	BS EN IEC 61800-3	2018
	BS EN IEC 61000-6-2	2019
	BS EN 61000-6-3	2007 +A1:2011
	BS EN IEC 55014-1	2021
	BS EN IEC 55014-1	2021
Safety	BS EN 61800-5-1	2007 +A1:2017 +A11:2021
	BS EN 60335-1	2012 +A13:2017 +A2:2019
	BS EN 60730-1	2017
RoHS	BS EN 50581	2012

The instrument must be disposed of according to local electric and electronic device disposal regulations.