VTM308 3-PHASE MASTER REGULATOR WITH DIGITAL SCROLL (D.S.) FILTER

1. SAFETY INSTRUCTIONS

1.1. Important

- Read these instructions carefully before installation.
- Before use, follow all the installation and electrical connection instructions.
- Keep these instructions with the regulator for future use.
- Observe current technical and safety regulations.
- The regulator must be professionally installed and commissioned by a qualified technician. INCORRECT installation may cause damages.
- Before turning on device power, always check that it is correctly grounded.
- DO NOT tamper with or REMOVE internal regulator components; this NULL AND VOIDS THE WARRANTY and can cause damages.
- The user must be protected against electrical shock and the motor must be equipped with overload protection, as per current pertinent regulations.
- According to safety regulations, protection against any contact with live parts must be ensured by correct regulator installation; all parts that ensure protection must be secured so as irremovable without the help of a tool.
- DO NOT turn on the regulator without the protection lid.
- NEVER touch electrical circuit parts when the power is on.
- Install the regulator away from direct sunlight so as not to overheat the case.
- Make sure working conditions (working temperature, humidity, etc.) are within the indicated limits (see point 7).
- Do not install the regulator near heat sources (resistances, hot air ducts, etc.) where room temperature can exceed 50 °C, devices that generate strong magnetic fields, sites subject to rain, humidity, dust, excessive mechanical vibrations or shocks.

2. VTM308 DESCRIPTION

2.1. Overview

The VTM series regulators are three-phase controllers built on a Vetronite support in an IP55 grade GW PLAST box. The control zone is at the top of the board while the power zone is at the bottom.
In addition to the M1, M3 and M4 terminal boards, regulation, connection and signal devices are found in the control zone.
Fan speed control varies to maintain the value measured by the transducer or probe within the P.B. proportional band.
Output increases as input increases.
N.B. The Set-Point S.P. is at the center of the proportional band.

2.2. Key

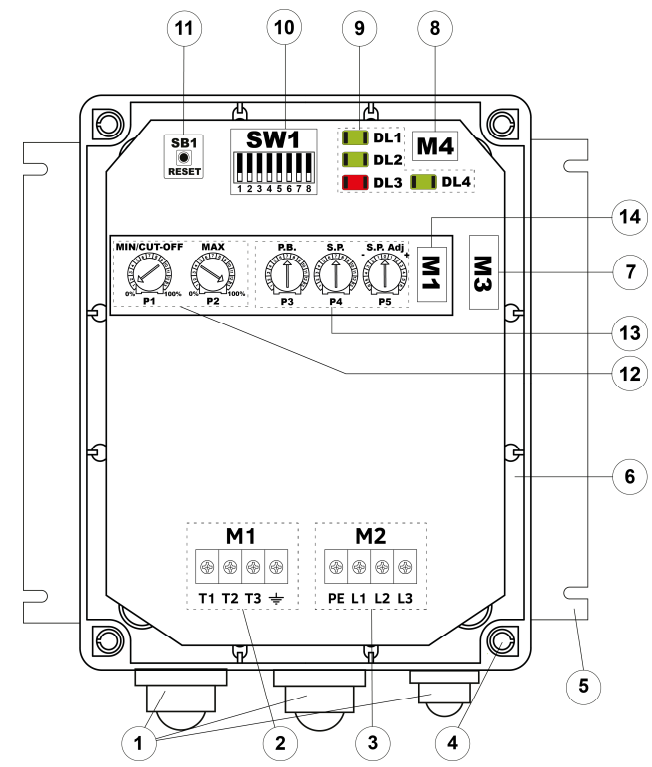

VTM308 Key		
BASE card		
1	**-**	Wire clamps - connection wires
2	**M1**	Three-phase output terminal board (T1,T2,T3) + load GND
3	**M2**	Three-phase power supply terminal board (L1-L2-L3) + PE
4	**-**	TPN lock screws with max 1.8 N m torque
5	**-**	Wall mount perforated fin
6	**-**	GW PLAST case
7	**M3**	Command input terminal board
8	**M4**	Alarm relay terminal board
9	**DL..**	Signal led
10	**SW1**	Programming dip switch
11	**SB1**	Reset button
PLUG card		
12	**P1**	Minimum voltage settings (MIN / CUT-OFF)
	P2	Maximum voltage settings (MAX)
13	**P3**	Proportional band settings (P.B.)
	P4	Set-Point settings (S.P.)
	P5	Set-Point fine tuning (S.P. Adj.)
14	**M1**	Thermal contact (TK) and Start/Stop (S2) function terminal board

2.3. Mechanical dimensions

Model	Plate data			Mechanical dimensions					Weight(*)
	A	kV A	IP	A	B	C	E	F	Kg
VTM308	8	5.5	55	254	235	114	213	200	2.3

(*) Packaging included

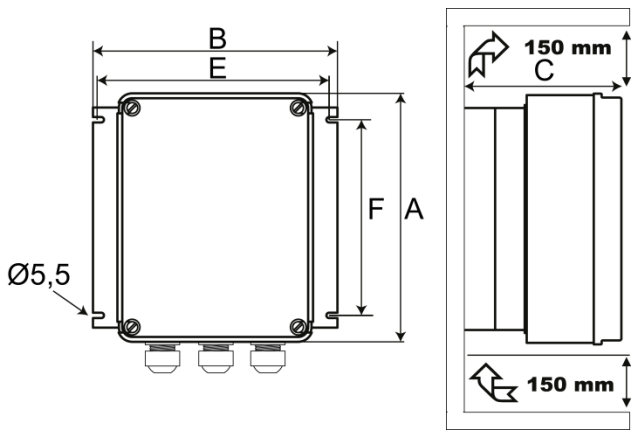

3. INSTALLATION

3.1. INSTALLATION

Vertically install the device with the wire inlet facing down. To permit correct heat dissipation, guarantee ≥150 mm clearance over and under the regulator.
Reassemble and make sure the external protection lid is fully closed.

3.2. Electrical connections

Flexible wire rated section.
Signal: ≤ 1.5 mm² (15 AWG)
Power (output): ≤ 10 mm² (8 AWG)
Power (supply): ≤ 10 mm² (8 AWG)
N.B. Protection devices: see point 8.

3.2.1. Power (L1/L2/L3/PE) and load (T1/T2/T3/GND) connection:

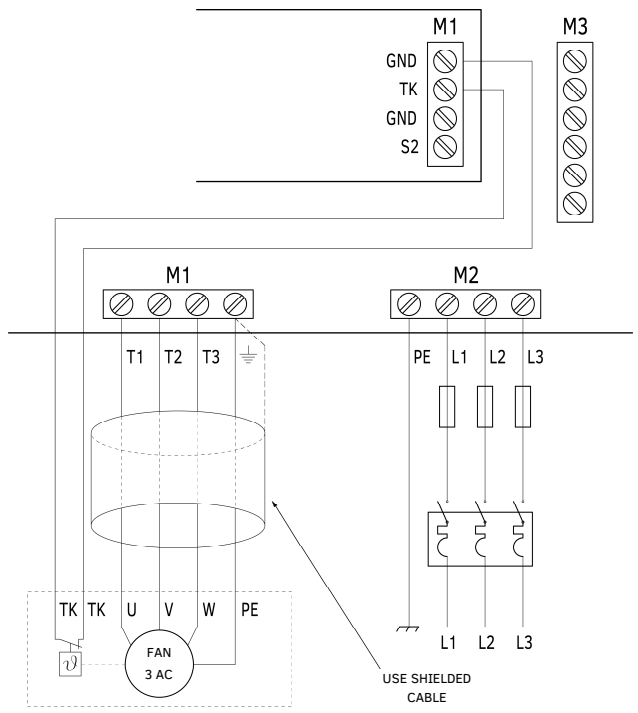

3.2.2. Command signal connections (M3)

M3	Terminal	Label	Description
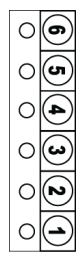	6	GND	Reference grounding
	5	S0	ON-OFF input (see point 3.3.2)
	4	VR	Reference voltage output +10.0 Vdc (±1.0%)
	3	V+	Power voltage output +22 Vdc (±20%)
	2	GND	Reference grounding
	1	IN	Transducer signal input

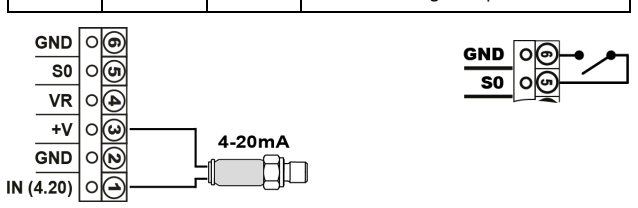

3.2.3. Alarm relay connection (M4)

	Terminal	Label	Description
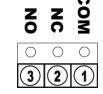	3	NO	Normally open contact
	2	NC	Normally closed contact
	1	COM	Shared terminal

3.2.4. ON-OFF additional input (M1 plug)

M1 plug	Terminal	Label	Description
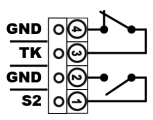	4	GND	Thermal contact reference
	3	TK	Thermal contact function Close=Run Open=Stop
	2	GND	Stat/Stop contact reference
	1	S2	Start/Stop contact function Close=Stop Open=Run

3.3. SW1 (1 – 8) function settings

SW1	Description
1	Regulator settings selection ON = "DGT" mode, Digital Scroll filter **on** OFF = "FIX" mode, Digital Scroll filter **off**
2, 3	Alarm relay function selection (see point 3.3.3)
4	ON = P1 **CUT-OFF voltage settings** OFF = P1 **(MIN) minimum voltage settings**
5	ON-OFF input function selection (see point 3.3.2)
6,7	Reserved
8	Activate Digital Scroll function mode, keep ON

WARNING Press button SB1 after changing SW1 settings to apply changes.

3.3.1. SW1 default settings



3.3.2. Functional programming for the ON-OFF input (S0)

SW1-5	Description
OFF	Output forced to MAX's value (closed = MAX (P2))
ON	Output forced to 100% (closed = 100%)

3.3.3. Alarm relay functional programming

SW1-2	SW1-3	Description
OFF	OFF	Relay idle when the regulator is in alarm conditions
ON	OFF	Relay idle when the regulator is: - in alarm conditions - in standby
OFF	ON	Relay idle when the regulator is: - in alarm conditions - in standby - in Stop
ON	ON	Relay always excited

4. FUNCTIONAL CHARACTERISTIC

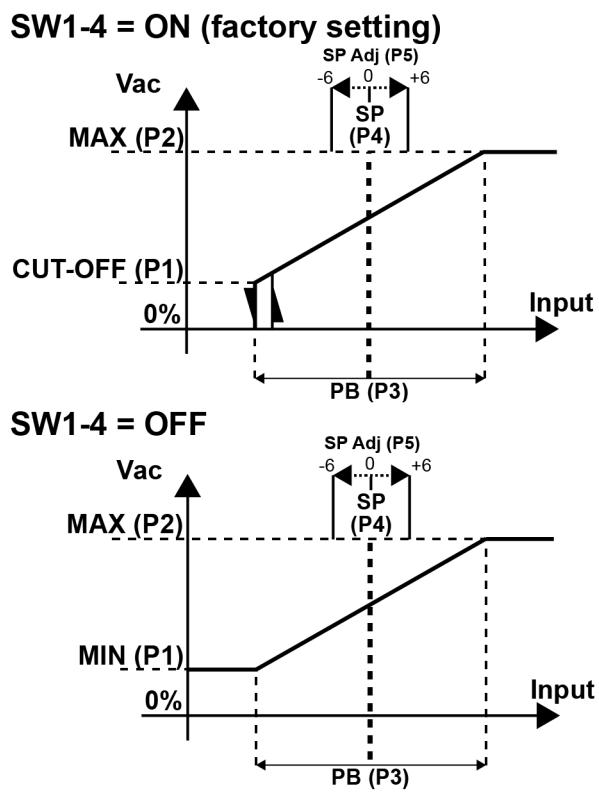

5. TRIMMER SETTINGS

5.1. Regulation limits

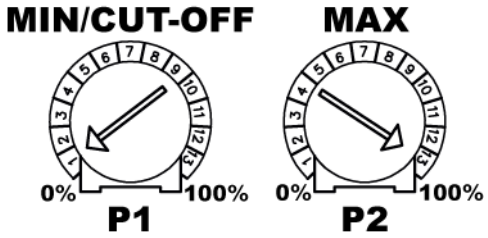

Trimmer	Label	Description
P1	**MIN/ CUT-OFF**	**Use as minimum voltage (MIN)** SW1-4 = OFF (range from 0-100%). Turn P1 clockwise to the required minimum voltage.
		Use as CUT-OFF (off point) SW1-4 = ON (range from 0-100%). Once the minimum voltage is set, turn SW1-4 ON and press SB1 (reset). CUT-OFF will be set to minimum voltage.
P2	**MAX**	Maximum speed limit settings (range 0-100%).

Manufactured by SELPRO - Fan Speed Controllers Specialist
SELPRO Srl – Via Piamarta 5/11 – 25021 Bagnolo Mella (BS) – selpro.it – info@selpro.it – Tel. +39 0306821611 – Fax +39 030622274

VTM308 3-PHASE MASTER REGULATOR WITH DIGITAL SCROLL (D.S.) FILTER

5.2. Proportional band and Set-Point settings

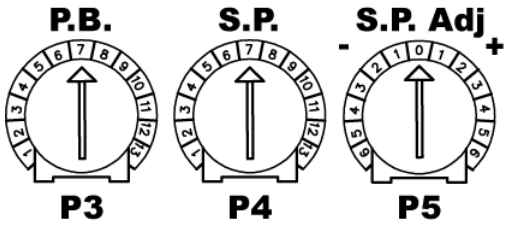

	Description
P.B.	Proportional band settings (see point 5.5)
S.P.	Set Point settings (see point 5.3)
S.P. Adj. range	Set Point fine tuning (see point 5.3)

5.3. P4 (S.P.) Set-Point and P5 (S.P.Adj) fine tuning

The Set-Point value is given by adding or subtracting S.P. Adj. to/from S.P.
The Set-Point is at the center of the proportional band.

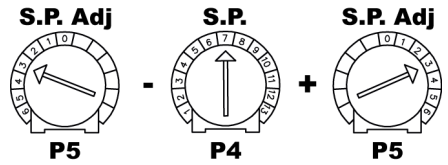

5.4. S.P. and S.P. Adj. range

5.4.1. Scale 4-20 mA

- S.P. Adj. range						mA		+ S.P. Adj. range					
-6	**-5**	**-4**	**3**	**2**	**1**	**SP**		**+1**	**+2**	**+3**	**+4**	**+5**	**+6**
5.4	5.5	5,6	5.7	5.8	5.9	**1**	**6**	6.1	6.2	6.3	6.4	6.5	**6.6**
6.4	6.5	6.6	6.7	6.8	6.9	**2**	**7**	7.1	7.2	7.3	7.4	7.5	**7.6**
7.4	7.5	7.6	7.7	7.8	7.9	**3**	**8**	8.1	8.2	8.3	8.4	8.5	**8.6**
8.4	8.5	8.6	8.7	8.8	8.9	**4**	**9**	9.1	9.2	9.3	9.4	9.5	**9.6**
9.4	9.5	9.6	9.7	9.8	9.9	**5**	**10**	10.1	10.2	10.3	10.4	10.5	**10.6**
10.4	10.5	10.6	10.7	10.8	10.9	**6**	**11**	11.1	11.2	11.3	11.4	11.5	**11.6**
11.4	11.5	11.6	11.7	11.8	11.9	**7**	**12**	12.1	12.2	12.3	12.4	12.5	**12.6**
12.4	12.5	12.6	12.7	12.8	12.9	**8**	**13**	13.1	13.2	13.3	13.4	13.5	**13.6**
13.4	13.5	13.6	13.7	13.8	13.9	**9**	**14**	14.1	14.2	14.3	14.4	14.5	**14.6**
14.4	14.5	14.6	14.7	14.8	14.9	**10**	**15**	15.1	15.2	15.3	15.4	15.5	**15.6**
15.4	15.5	15.6	15.7	15.8	15.9	**11**	**16**	16.1	16.2	16.3	16.4	16.5	**16.6**
16.4	16.5	16.6	16.7	16.8	16.9	**12**	**17**	17.1	17.2	17.3	17.4	17.5	**17.6**
17.4	17.5	17.6	17.7	17.8	17.9	**13**	**18**	18.1	18.2	18.3	18.4	18.5	**18.6**

5.4.2. Scale 0-45 bar

- S.P. Adj. range						bar		+ S.P. Adj. range					
-6	**-5**	**-4**	**3**	**2**	**1**	**SP**		**+1**	**+2**	**+3**	**+4**	**+5**	**+6**
3.94	4.22	4.50	4.78	5.06	5.34	**1**	**5.63**	5.91	6.19	6.47	6.75	7.03	**7.31**
6.75	7.03	7.31	7.59	7.88	8.16	**2**	**8.44**	8.72	9.00	9.28	9.56	9.84	**10.13**
9.56	9.84	10.13	10.41	10.69	10.97	**3**	**11.25**	11.53	11.81	12.09	12.38	12.66	**12.94**
12.38	12.66	12.94	13.22	13.50	13.78	**4**	**14.06**	14.34	14.63	14.91	15.19	15.47	**15.75**
15.19	15.47	15.75	16.03	16.31	16.59	**5**	**16.88**	17.16	17.44	17.72	18.00	18.28	**18.56**
18.00	18.28	18.56	18.84	19.13	19.41	**6**	**19.69**	19.97	20.25	20.53	20.81	21.09	**21.38**
20.81	21.09	21.38	21.66	21.94	22.22	**7**	**22.50**	22.78	23.06	23.34	23.63	23.91	**24.19**
23.63	23.91	24.19	24.47	24.75	25.03	**8**	**25.31**	25.59	25.88	26.16	26.44	26.72	**27.00**
26.44	26.72	27.00	27.28	27.56	27.84	**9**	**28.13**	28.41	28.69	28.97	29.25	29.53	**29.81**
29.25	29.53	29.81	30.09	30.38	30.66	**10**	**30.94**	31.22	31.50	31.78	32.06	32.34	**32.63**
32.06	32.34	32.63	32.91	33.19	33.47	**11**	**33.75**	34.03	34.31	34.59	34.88	35.16	**35.44**
34.88	35.16	35.44	35.72	36.00	36.28	**12**	**36.56**	36.84	37.13	37.41	37.69	37.97	**38.25**
37.69	37.97	38.25	38.53	38.81	39.09	**13**	**39.38**	39.66	39.94	40.22	40.50	40.78	**41.06**

5.5. P3 (P.B.) proportional band

Proportional band based on position

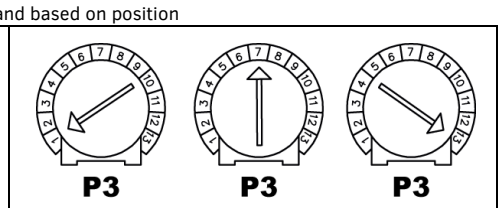

Scale	Position 1	Position 7	Position 13
4-20 mA	1.4 mA	2.6 mA	3.8 mA
0-45 bar	3.9 bar	7.3 bar	10.7 bar

5.6. Example of S.P. and P.B. settings with 0-45 bar transducer

If the Set-Point is set to **30.38 bar** with **7.3 bar band**, the three regulation trimmers must be set as follows:

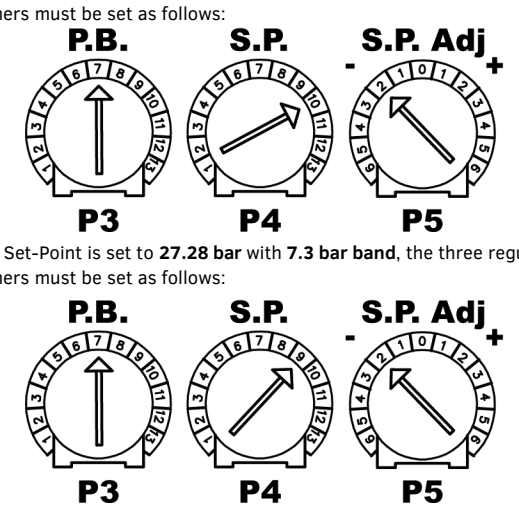

If the Set-Point is set to **27.28 bar** with **7.3 bar band**, the three regulation trimmers must be set as follows:

6. SIGNALS

6.1. Led

LED	COLOR	LABEL	DESCRIPTION
DL1	GREEN	PWR	Power on (light on)
DL2	GREEN	CPU RUN	Microprocessor running (blinking light)
DL3	RED	FAIL	Fault alarm (blinking light) (see point 6.2)
DL4	GREEN	-	RL1 relay excited (light on)

6.2. Alarm blink code (DL3) in order of priority

NR. BLINKS	DESCRIPTION
0 (light on)	Insufficient power supply Phase loss (L2, L3)
1	Board temperature over limit (> 85 °C)
2	Phase loss (L1)
3	T.K. contact open
4	Input signal over range (*)
5	Input signal under range (*)
6	Plug not installed

(*) The output switches to a fixed % equal to 50% of the maximum value

N.B. In the event of alarm, the DL2 led remains off to facilitate DL3 led blink count

7. TECHNICAL SPECIFICATIONS

7.1. Power supply

Voltage: 400 Vac (±10%) three-phase (230/480 Vac upon request)
Frequency: 50/60 Hz automatic frequency recognition
Surge: For intallation category II (4 kV)
(> 500 Vac surge filters ON)
Mains: Monitoring on all three phases

7.2. Ground connection

VTM308 controllers are compatible with **IT – TT – TN** ground connections

7.3. Current

Rated RMS current @ 50 °C room temperature:
VTM308 8 A < 50 °C > 50 °C -0,6 A/°C
Overload: 150% of rated current (=10" every 3')

7.4. Power

Absorbed: 5 V A (command circuits)
Dissipated: VTM308 32 W @ 8 A
Functional characteristic: MASTER regulator
Direct function; output increases as input increases

7.5. Input signals and contacts

Analog: 4-20 mA (Ri = 100 Ω)
Clear contact "ON-OFF": Programmable S0 contact (see point 3.3.2)
Dedicated TK contact (M1 plug terminal board)
Dedicated S2 contact (M1 plug terminal board)

7.6. Output signals and contacts

Auxiliary power: 22 Vdc (±20%), ≤ 20 mA not stabilized and protected against short circuit
5,0 Vdc (±1,0%), ≤ 20 mA protected against short circuit
Relè RL1: Contatti COM, NC e NO per allarme
3 A @ 250 Vac – 3 A @ 30 Vdc

7.7. Alarms

Command input: 4-20 mA: 2 mA ≤ Iin ≤ 24 mA
Mains monitoring: Phase loss
Regulator: Working temperature control with internal probe (T > 85 °C)

7.8. Protections

Surge: As per EN61000-4-5: surge category II (4 kV)
Auxiliary power: With PTC sensor for short circuit protection
Internal temperature: Internal thermal protection

7.9. Case

Material: GWPLAST 75 (temperatura < 85 °C) and aluminum
Pollution: High pollution
Fire resistance: Category D

7.10. Insulation

Case: Class I (use of grounded protection)
Command: 4000 Vac between command input and mains voltage parts

7.11. Working conditions

Working temperature: From -20 °C to 50 °C; use S2 contact if T ≤ -10 °C
Storage temperature: From -25 °C to 65 °C
Humidity: From 0% to 85% non-condensing relative humidity
Vibrations: ≤ 1 g (9.8 m/s²)

7.12. Assembly

Assembly: Wall mount in vertical position only

8. CIRCUIT BREAKER AND SHORT CIRCUIT PROTECTION

To protect the controller power module from severe short-circuits or overloads, it is imperative to use semiconductor protection fuses with a suitable I2t value fitted upstream of the controller.

Model	Circuit breaker	Protection fuses - SRC			
		Type	Vac	Amp	P/N
VTM308	**16 A**	10x38	690	16	FR10GB69V16

For additional protection, a circuit breaker with a C-curve can be used, mounted upstream of the partializer. The installer must install these protections.

Surge arrester:
Electrical protection inserted between the regulator power supply and grounding, that protects the device from transitory power surges up to 480 Vac.

Warning:
Disconnect the faston contact from the ground reference, in the electrical rigidity test.

Warning:
For DIFFERENTIAL protection systems, use components with grounded current dispersion ≥ 60 mA.

VTM308 has a grounded current dispersion of about 4 mA.

9. MANUFACTURER'S DECLARATION

This instrument was designed and constructed for use in industrial environments and meets the following community directives:

- Low Voltage Directive (LVD) 2014/35/EU
- Electro Magnetic Compatibility Directive (EMC) 2014/30/EU

10. COMMUNITY DIRECTIVES AND TECHNICAL STANDARDS

The essential directive requirements are met by compliance with product standard.

Directive	Code Standard	Description
2014/35/EU	EN 60800-5-1 (2009/04)	Variable speed electric drives. Safety recommendations - Electrical, heat and energy safety
2014/30/EU	EN 61800-3 (2019/01) EN 61000-4-5 EN 61000-6-2 EN 61000-6-3	Variable speed electric drives. Product standard for Electromagnetic compatibility and specific test methods

With reference to EMC compatibility, according to markings:

CE EMC LVD

The instrument must be disposed of according to local electric and electronic device disposal regulations.

Manufactured by SELPRO - Fan Speed Controllers Specialist
SELPRO Srl – Via Piamarta 5/11 – 25021 Bagnolo Mella (BS) – selpro.it – info@selpro.it – Tel. +39 0306821611 – Fax +39 030622274