ESY100 - MULTI-INPUT MASTER-SLAVE REGULATOR WITH POWER PARTIALIZATION ~1 VAC FOR SINGLE PHASE FANS

1. SAFETY INSTRUCTIONS

1.1. Important

- Read these instructions carefully before installation.
- Before use, follow all the installation and electrical connection instructions.
- Keep these instructions with the regulator for future use.
- Observe current technical and safety regulations.
- The controller must be professionally installed and commissioned by a qualified technician. Incorrect installation may cause damages.
- Before turning on regulator power, always check that it is correctly grounded.
- Do not tamper with or remove internal regulator components; this NULL AND VOIDS THE WARRANTY and can cause damages.
- The user must be protected against electrical shock and the motor must be equipped with overload protection, as per current pertinent regulations.
- According to safety regulations, protection against any contact with live parts must be ensured by correct controller installation; all parts that ensure protection must be secured so as irremovable without the help of a tool.
- Do not turn on the regulator without the protection lid.
- Never touch electrical circuit parts when the power is on.
- Install the controller away from direct sunlight so as not to overheat the case.
- Make sure working conditions (working temperature, humidity, etc.) are within the indicated limits (see point 8).
- Do not install the controller near heat sources (resistances, hot air ducts, etc.) where room temperature can exceed 50 °C, devices that generate strong magnetic fields, sites subject to rain, humidity, dust, excessive mechanical vibrations or shocks.

2. ESY100 DESCRIPTION

2.1. Overview

The equipment in the "ESY" series are multifunctional analog regulators for single phase 230 VAC proportional power control. They use the phase cutting (SCR/Triac) power partializing principle, effective in output to all single phase asynchronous motors (AC) connected to terminal block M1, such as:
fans, pumps, mixers, agitators, etc.
The ESY100 regulator is a device that works in both MASTER and SLAVE mode, based on one of the command signals (mA-Vdc/kohm) connected to one of the four available inputs.
Requiring no programming, ESY100 automatically selects the ACTIVE and GREATEST value command signal.
The control command received provides the ESY100 regulator with the reference for continuously, efficiently managing the proportional rotational speed control of the AC motor units connected, using a 0-100% command dynamic.
It is possible to limit the control voltage field (VAC) in percentage using two command potentiometers present on the board, from P1 MAX (VAC at 100%) to P2 Cut-Off/MIN (VAC at 0%) with selectable mode using the jumper, J3.
With jumper J1, the REVERSE operation can be activated, with intrinsic safety, allowing the fans to be activated at 100% in the event the control command is cut-off (cable-break function)
To set the proportional automatic control operating point precisely, a pair of digital switches are provided that define the set-point (SP).
The SP value is defined by two (2) 13-position switches (SP & +/- SP adj.), where:

SP	main operating point (set-point)	SP adj	Adjustment value for SP

The optional plug is available to set two set-points (SP1 & SP2), which can be selected with the SP2 contact.
There are numerous active and passive protections on the regulator. These include the active protections on the command inputs (Vdc-mA) and the over voltage protection circuit on the power supply network (max 275 VAC), the filter for EMS noise is at the limit for civil applications, whereas the ground circuit structure is compatible with the following primary systems: IT-TT-TN.
CAUTION: we recommend checking that the motors used are suitable for use with cut phase VAC control (better if outflow and in Class F).
External rotor motors are generally easier to subject to voltage control than standard AC motors.
CAUTION: the voltage partialization control, VAC, generates noise in the motor that manifests as the VAC voltage varies.
The noise can also occur in other modes and at values other than the VAC control range, in a group of AC motors of the same brand and model.
VAC control of the motors installed on metal structures, assembled and fixed metal-to-metal without the necessary devices, amplifies the background noise generated by SCR/Triac control.

2.2. Legend

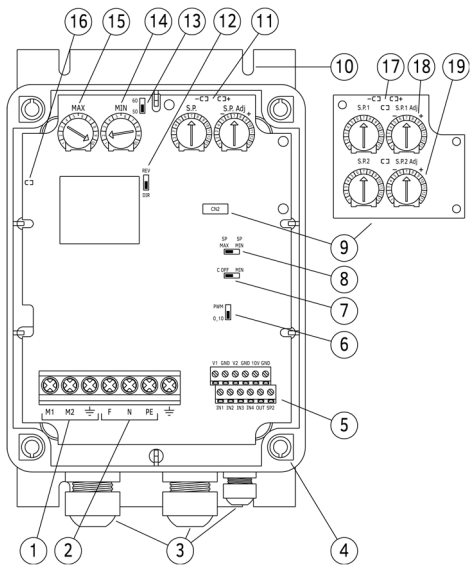

ESY100 legend		
Base regulator		
1	M1	Motor(s) output connection terminal board
2	M3,M4	Power supply connection terminals 230 Vac (+/-15 %) 50/60 Hz
3	-	Wire clamp kit (2xM20 + 2xM12)
4	-	Screw plugs
5	M2	Command input terminal board
6	J4	Jumper selection type OUT (0-10 V / PWM)
7	J3	Jumper selection function P2 (Cut-OFF / MIN)
8	J2	Jumper selection set-point position (MAX / MIN)
9	CN2	Connector for set-point double plug / Set-point double plug
10	-	Slots for wall mounting
11	DL2/DL3	Position signal LED input value greater than set-point
12	J1	Jumper selection control function (DIR / REV)
13	J5	Jumper selection mains frequency (50 Hz / 60 Hz)
14	P2	Minimum trimmer (MIN)
15	P1	Maximum trimmer (MAX)
16	DL3	LED indicating mains power present
Optional plug		
17	DL3/DL4	Position signal LED input value greater than set-point
18	P1/P3	Setting trimmers SP1 (SP1 + SP1 Adj)
19	P2/P4	Setting trimmers SP2 (SP2 + SP2 Adj)

2.3. Mechanical dimensions

Model	Plate Data			Mechanical Dimensions					Weight (*)
	IP	A	W	A	B	C	E	F	Kg
ESY108	55	8	1600	200	162	95	156	162	1.5
ESY112	55	12	2400	200	162	95	156	162	1.5
ESY116	55	16	3200	240	152	115	93	210	1.9
ESY120	55	20	4000	240	152	115	93	210	1.9

(*) Packaging included

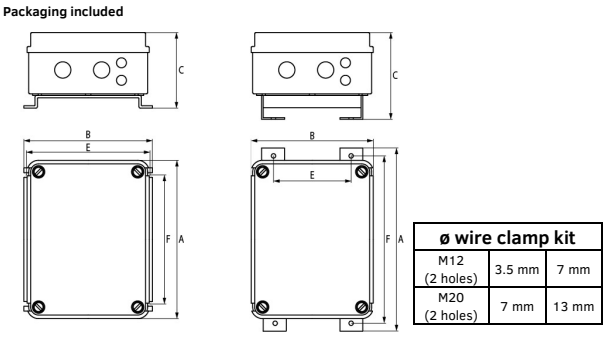

ø wire clamp kit		
M12 (2 holes)	3.5 mm	7 mm
M20 (2 holes)	7 mm	13 mm

Fixing holes diameter: 5.5 mm

3. INSTALLATION

3.1. Installation

Vertically install the device with the wire inlet facing down.
To permit correct heat dissipation, guarantee ≥50 mm clearance over and under the regulator.
Reassemble and make sure the external protection lid is fully closed.

3.2. Electrical connections

Maximum nominal flexible cable section.

Signal:	≤ 1.5 mm² (16 AWG)	Torque:	≤ 0.5 Nm
Power (output):	≤ 10.0 mm² (8 AWG)	Torque:	≤ 1.5 Nm
Power (supply):	≤ 10.0 mm² (8 AWG)		

N.B. Protection devices: see point 9.

3.2.1. Power supply wiring (F/N/PE) and load (M1/M2/GROUND)

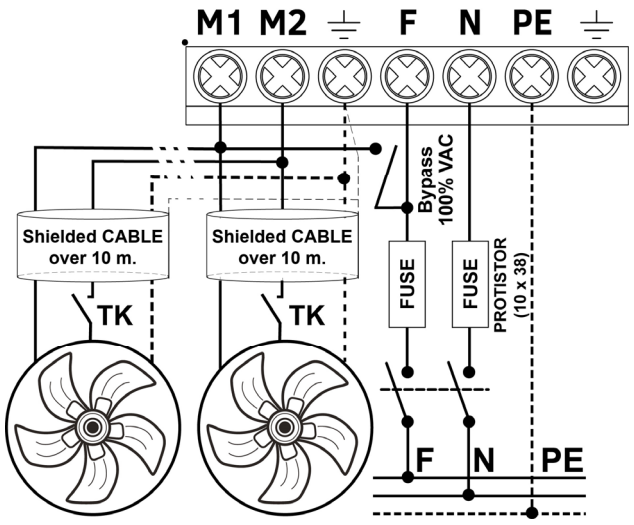

N.B.: Always check the power supply frequency and consequently position the jumper, **J5**, in the correct position. An incorrect position of J5 does not damage the regulator. It only modifies the control curve, or the % ratio between the input command and the output VAC voltage.

3.2.2. Command signal connections (M2)

Terminal	Label	Description
1	V1	Reference voltage output +22.0 Vdc (± 20 %)
2	IN1	Command signal input 0-20 mA
3	GND	Reference grounding
4	IN2	Command signal input 0-20 mA
5	V2	Reference voltage output +22.0 Vdc (± 20 %)
6	IN3	Command signal input NTC 25 °C @ 10 kΩ
7	GND	Reference grounding
8	IN4	Command signal input 0-10 Vdc
9	10 V	Reference voltage output +10.0 Vdc (± 1.0 %)
10	OUT	Command signal output (J4)
11	GND	Reference grounding
12	SP2	Set-point 2 activation contact (only with optional plug)

3.2.2.1. Logic and analog command input connection

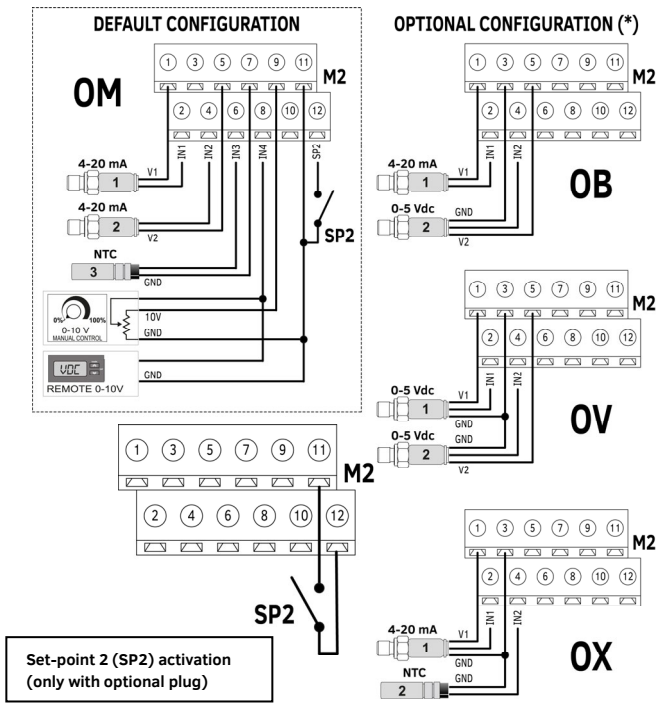

(*) Caution: the default settings is the OM configuration.
The other configurations should be defined at time of order and cannot be modified later on.

3.2.2.2. Analog output connection

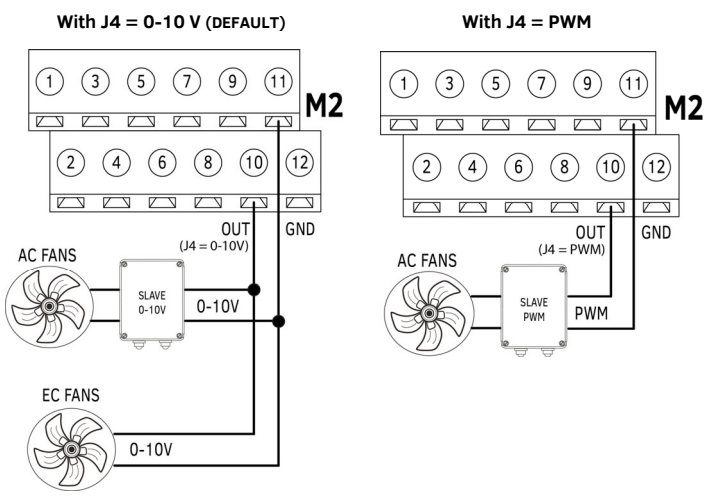

4. FUNCTIONAL CHARACTERISTIC

4.1. Operating dynamics

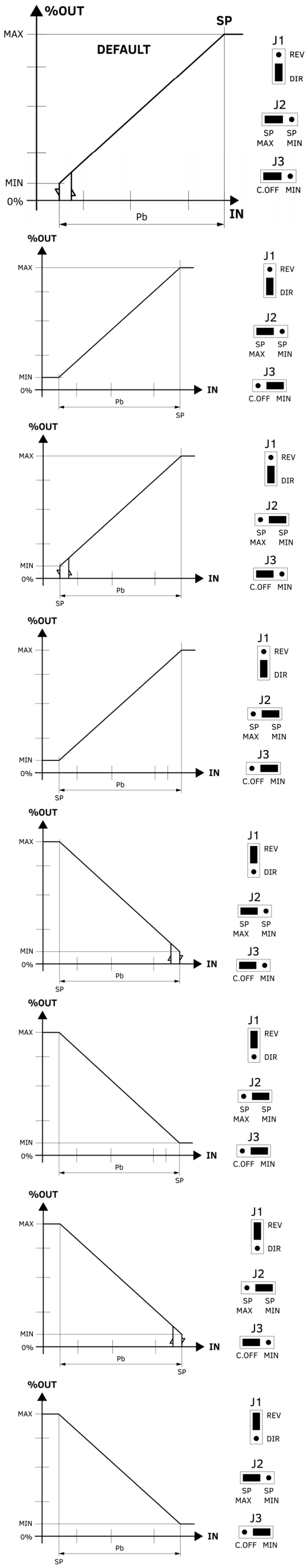

ESY100 - MULTI-INPUT MASTER-SLAVE REGULATOR WITH POWER PARTIALIZATION ~1 VAC FOR SINGLE PHASE FANS

5. SETTINGS

5.1. Trimmer settings

Trimmer	Label	Description
P1	**MAX**	**P1** Voltage limit VAC MAX at output (0-100%) Short-circuit input 1 and 2 to M3 (the output goes to 100%) Turn P1 to the desired VAC value (remove the short-circuit bridge on the Vdc input)
P2(*)	**MIN**	**P2 as VAC min voltage / J3 = MIN** (range 0-70%) Turn P2 clockwise to the required minimum VAC voltage desired that remains always operative
	CUT-OFF (Default)	**P2 as CUT-OFF / J3 = C.OFF** (range from 0-70%) **(point for turning on and off the control)** Position J2 on MIN: turn P2 clockwise to the required minimum voltage. Move J2 to the C-OFF mode. The command starts from the minimum set VAC value

(*) Use P2 (0-70%) to check the fan rotations, correct VAC partializing at output and CUT-OFF calibration.

5.1.1. Set-pointsettings

P3	**SP**	**P3** Digital potentiometer with 13-position detent in cermet to facilitate setting the set-point
P4	**SP Adj**	**P4** Digital potentiometer with 13-position detent in cermet for fine setting of the set-point

(*) The Proportional Band (**Pb**) is fixed, and has the following values:

4-20 mA Scale	**2.50 mA**
0-15 bar Scale	**2.34 bar**
0-25 bar Scale	**3.91 bar**
0-30 bar Scale	**4.69 bar**

0-45 bar Scale	**7.03 bar**
0-50 bar Scale	**7.81 bar**
NTC Scale	**7.0 °C**

5.1.2. Trimmer (1 set-point version): standard position

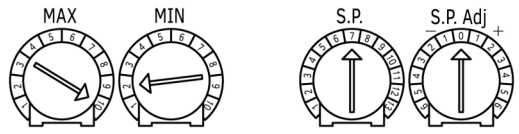

5.1.3. Settings with optional plug for double set-point

P1	**SP1**	**P1** digital potentiometer with 13-position detent in cermet to set set-point no. 1
P2	**SP1 Adj**	**P2** digital potentiometer with 13-position detent in cermet to for fine setting of set-point no. 1
P3	**SP2***	**P3** digital potentiometer with 13-position detent in cermet to set set-point no. 2
P4	**SP2 Adj**	**P4** digital potentiometer with 13-position detent in cermet to for fine setting of set-point no. 2

(*) To select set-point no. 2, use the contact in terminal block SP2

5.1.4. Trimmer (2 set-point version): standard position

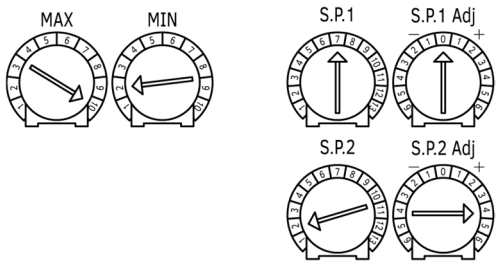

5.2. Settings with the selection jumpers (Jx)

Position		Default	Function	Mode	
J1	REV	DIR	Regulation mode	Reverse	1 REV 2 DIR
	DIR			Direct	
J2	MAX	SP MAX	Speed at set-Point	MAX fans speed	SP MAX 1 2 SP MIN
	MIN			MIN fans speed	
J3	CUT-OFF	CUT-OFF	Start Regulation Mode	Start Vac	1 2 CUT OFF MIN
	MIN			MIN speed	
J4	PWM	0-10	Output for Extra Slave Power	PWM Signal (20 mA)	1 PWM 2 0-10
	0-10 V			0-10V analog signal	
J5	60 Hz	50 Hz	Frequency selection	60 Hz	1 60Hz 2 50Hz
	50 Hz			50 Hz	

6. SIGNALS

6.1. LED

LED	Color	Label	Description
DL1	**GREEN**	**PWR ON**	Mains VAC power supply present (light on)
DL2	**GREEN**	**-**	Input < SP – 15% Pb(*) (light on)
DL3	**GREEN**	**+**	Input > SP + 15% Pb(*) (light on)

Optional plug

DL1	**GREEN**	**1**	SP1 selected (light on)
DL2	**GREEN**	**2**	SP2 selected (light on)
DL3	**GREEN**	**+**	Input > SP + 15% Pb(*) (light on) REPLACE DL2 ON THE MAIN BOARD
DL4	**GREEN**	**-**	Input < SP – 15% Pb(*) (light on) REPLACE DL3 ON THE MAIN BOARD

(*) The proportional band (**Pb**) is fixed, see the values for PB in the table above

N.B.: if the input value and the value of SP (±15% Pb), the DL1 (-) and DL2 (+) LEDs stay off.

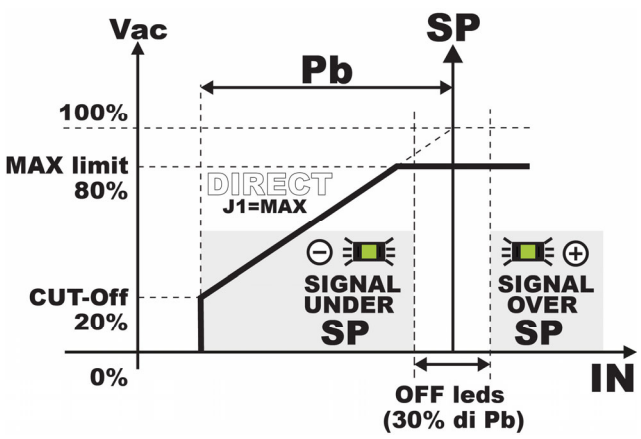

7. SET-POINT CONTROL TABLE

7.1. Set-point values 4-20 mA scale (Transducer 4-20 mA > 1 mA = 1 mA = 0.1Vdc)

- SP Adj						4 – 20 mA		+ SP Adj					
-6	-5	-4	-3	-2	-1	SP		1	2	3	4	5	6
7.00	7.05	7.15	7.25	7.35	7.45	1	**7.56**	7.66	7.76	7.86	7.96	8.06	8.11
7.51	7.56	7.66	7.76	7.86	7.96	2	**8.06**	8.16	8.26	8.36	8.46	8.56	8.61
8.51	8.56	8.66	8.76	8.86	8.96	3	**9.06**	9.16	9.26	9.36	9.46	9.56	9.61
9.51	9.56	9.66	9.76	9.86	9.96	4	**10.06**	10.16	10.26	10.36	10.46	10.56	10.61
10.51	10.56	10.67	10.77	10.87	10.97	5	**11.07**	11.17	11.27	11.37	11.47	11.57	11.62
11.52	11.57	11.67	11.77	11.87	11.97	6	**12.07**	12.17	12.27	12.37	12.47	12.57	12.62
12.52	**12.57**	**12.67**	**12.77**	**12.87**	**12.97**	7	**13.07**	**13.17**	**13.27**	**13.37**	**13.47**	**13.57**	13.62
13.52	13.57	13.67	13.78	13.88	13.98	8	**14.08**	14.18	14.28	14.38	14.48	14.58	14.63
14.53	14.58	14.68	14.78	14.88	14.98	9	**15.08**	15.18	15.28	15.38	15.48	15.58	15.63
15.53	15.58	15.68	15.78	15.88	15.98	10	**16.08**	16.18	16.28	16.38	16.48	16.58	16.63
16.53	16.58	16.68	16.78	16.88	16.99	11	**17.09**	17.19	17.29	17.39	17.49	17.59	17.64
17.54	17.59	17.69	17.79	17.89	17.99	12	**18.09**	18.19	18.29	18.39	18.49	18.59	18.64
18.04	18.09	18.19	18.29	18.39	18.49	13	**18.59**	18.69	18.79	18.89	18.99	19.09	19.14

7.2. Set-point values 0-15 bar scale (Transducer 4-20 mA > 1 mA = 0.938 bar)

- SP Adj						0 - 15 bar		+ SP Adj					
-6	-5	-4	-3	-2	-1	SP		1	2	3	4	5	6
2.82	2.86	2.96	3.05	3.14	3.24	1	**3.33**	3.43	3.52	3.62	3.71	3.80	3.85
3.29	3.33	3.43	3.52	3.62	3.71	2	**3.80**	3.90	3.99	4.09	4.18	4.27	4.32
4.23	4.27	4.37	4.46	4.56	4.65	3	**4.74**	4.84	4.93	5.03	5.12	5.21	5.26
5.17	5.21	5.31	5.40	5.50	5.59	4	**5.68**	5.78	5.87	5.97	6.06	6.15	6.20
6.11	6.15	6.25	6.34	6.44	6.53	5	**6.62**	6.72	6.81	6.91	7.00	7.09	7.14
7.05	7.09	7.19	7.28	7.38	7.47	6	**7.57**	7.66	7.75	7.85	7.94	8.04	8.08
7.99	**8.04**	**8.13**	**8.22**	**8.32**	**8.41**	7	**8.51**	**8.60**	**8.69**	**8.79**	**8.88**	**8.98**	9.02
8.93	8.98	9.07	9.16	9.26	9.35	8	**9.45**	9.54	9.63	9.73	9.82	9.92	9.96
9.87	9.92	10.01	10.10	10.20	10.29	9	**10.39**	10.48	10.57	10.67	10.76	10.86	10.90
10.81	10.86	10.95	11.05	11.14	11.23	10	**11.33**	11.42	11.52	11.61	11.70	11.80	11.84
11.75	11.80	11.89	11.99	12.08	12.17	11	**12.27**	12.36	12.46	12.55	12.64	12.74	12.79
12.69	12.74	12.83	12.93	13.02	13.11	12	**13.21**	13.30	13.40	13.49	18.58	13.68	13.73
13.16	13.21	13.30	13.40	13.49	13.58	13	**13.68**	13.77	13.87	13.96	14.05	14.15	14.20

7.3. Set-point values 0-25 bar scale (Transducer 4-20 mA > 1 mA = 1.563 bar)

- SP Adj						0 - 25 bar		+ SP Adj					
-6	-5	-4	-3	-2	-1	SP		1	2	3	4	5	6
4.69	4.77	4.93	5.08	5.24	5.40	1	**5.55**	5.71	5.87	6.03	6.18	6.34	6.42
5.48	5.55	5.71	5.87	6.03	6.18	2	**6.34**	6.50	6.65	6.81	6.97	7.12	7.20
7.04	7.12	7.28	7.44	7.59	7.75	3	**7.91**	8.06	8.22	8.38	8.53	8.69	8.77
8.61	8.69	8.85	9.00	9.16	9.32	4	**9.47**	9.63	9.79	9.94	10.10	10.26	10.34
10.18	10.26	10.41	10.57	10.73	10.88	5	**11.04**	11.20	11.35	11.51	11.67	11.82	11.90
11.75	11.82	11.98	12.14	12.30	12.45	6	**12.61**	12.77	12.92	13.08	13.24	13.39	13.47
13.31	**13.39**	**13.55**	**13.71**	**13.86**	**14.02**	7	**14.18**	**14.33**	**14.49**	**14.65**	**14.80**	**14.96**	15.04
14.88	14.96	15.12	15.27	15.43	15.59	8	**15.74**	15.90	16.06	16.21	16.37	16.53	16.61
16.45	16.53	16.68	16.84	17.00	17.15	9	**17.31**	17.47	17.62	17.78	17.94	18.09	18.17
18.02	18.09	18.25	18.41	18.57	18.72	10	**18.88**	19.04	19.19	19.35	19.51	19.66	19.74
19.58	19.66	19.82	19.98	20.13	20.29	11	**20.45**	20.60	20.76	20.92	21.07	21.23	21.31
21.15	21.23	21.39	21.54	21.70	21.86	12	**22.01**	22.17	22.33	22.48	22.64	22.80	22.88
21.94	22.01	21.17	22.33	22.48	22.64	13	**22.80**	22.95	23.11	23.27	23.42	23.58	23.66

7.4. Set-point values 0-30 bar scale (Transducer 4-20 mA > 1 mA = 1.875 bar)

- SP Adj						0 - 30 bar		+ SP Adj					
-6	-5	-4	-3	-2	-1	SP		1	2	3	4	5	6
5.63	5.73	5.91	6.10	6.29	6.48	1	**6.67**	6.85	7.04	7.23	7.42	7.61	7.70
6.57	6.67	6.85	7.04	7.23	7.42	2	**7.61**	7.79	7.98	8.17	8.36	8.55	8.64
8.45	8.55	8.74	8.92	9.11	9.30	3	**9.49**	9.68	9.86	10.05	10.24	10.43	10.52
10.33	10.43	10.62	10.80	10.99	11.18	4	**11.37**	11.56	11.74	11.93	12.12	12.31	12.40
12.21	12.31	12.50	12.69	12.87	13.06	5	**13.25**	13.44	13.63	13.81	14.00	14.19	14.28
14.10	14.19	14.38	14.57	14.75	14.94	6	**15.13**	15.32	15.51	15.69	15.88	16.07	16.17
15.98	**16.07**	**16.26**	**16.45**	**16.64**	**16.82**	7	**17.01**	**17.20**	**17.39**	**17.58**	**17.76**	**17.95**	18.05
17.86	17.95	18.14	18.33	18.52	18.70	8	**18.89**	19.08	19.27	19.46	19.64	19.83	19.93
19.74	19.83	20.02	20.21	20.40	20.59	9	**20.77**	20.96	21.15	21.34	21.53	21.71	21.81
21.62	21.71	21.90	22.09	22.28	22.47	10	**22.65**	22.84	23.03	23.22	23.41	23.59	23.69
23.50	23.59	23.78	23.97	24.16	24.35	11	**24.54**	24.72	24.91	25.10	25.29	25.48	25.57
25.38	25.48	25.66	25.85	26.04	26.23	12	**26.42**	26.60	26.79	26.98	27.17	27.36	27.45
26.32	26.42	26.60	26.79	26.98	27.17	13	**27.36**	27.55	27.73	27.92	28.11	28.30	28.39

7.5. Set-point values 0-45 bar scale (Transducer 4-20 mA > 1 mA = 2.813 bar)

- SP Adj						0 - 45 bar		+ SP Adj					
-6	-5	-4	-3	-2	-1	SP		1	2	3	4	5	6
8.45	8.59	8.87	9.15	9.43	9.72	1	**10.00**	10.28	10.56	10.85	11.13	11.41	11.55
9.86	10.00	10.28	10.56	10.85	11.13	2	**11.41**	11.69	11.97	12.26	12.54	12.82	12.96
12.68	12.82	13.10	13.38	13.67	13.95	3	**14.23**	14.51	14.80	15.08	15.36	15.64	15.78
15.50	15.64	15.92	16.21	16.49	16.77	4	**17.05**	17.33	17.62	17.90	18.18	18.46	18.60
18.32	18.46	18.75	19.03	19.31	19.59	5	**19.87**	20.16	20.44	20.72	21.00	21.28	21.43
21.14	21.28	21.57	21.85	22.13	22.41	6	**22.70**	22.98	23.26	23.54	23.82	24.11	24.25
23.97	**24.11**	**24.39**	**24.67**	**24.95**	**25.24**	7	**25.52**	**25.80**	**26.08**	**23.36**	**26.65**	**26.93**	27.07
26.79	26.93	27.21	27.49	27.77	28.06	8	**28.34**	28.62	28.90	29.19	29.47	29.75	29.89
29.61	29.75	30.03	30.31	30.60	30.88	9	**31.16**	31.44	31.72	32.01	32.29	32.57	32.71
32.43	32.57	32.85	33.14	33.42	33.70	10	**33.98**	34.26	33.55	34.83	35.11	35.39	35.53
35.25	35.39	35.67	35.96	36.24	36.52	11	**36.80**	37.09	37.37	37.65	37.93	38.21	38.36
38.07	38.21	38.50	38.78	39.06	39.34	12	**39.62**	39.91	40.19	40.47	40.75	41.04	41.18
39.48	39.62	39.91	40.19	40.47	40.75	13	**41.04**	41.32	41.60	41.88	42.16	42.45	42.59

7.6. Set-point values 0-50 bar scale (Transducer 4-20 mA > 1 mA = 3.125 bar)

- SP Adj						0 - 50 bar		+ SP Adj					
-6	-5	-4	-3	-2	-1	SP		1	2	3	4	5	6
9.39	9.54	9.86	10.17	10.48	10.80	1	**11.11**	11.42	11.74	12.05	12.36	12.68	12.83
10.95	11.11	11.42	11.74	12.05	12.36	2	**12.68**	12.99	13.30	13.62	13.93	14.24	14.40
14.09	14.24	14.56	14.87	15.19	15.50	3	**15.81**	16.13	16.44	16.75	17.07	17.38	17.54
17.22	17.38	17.69	18.01	18.32	18.63	4	**18.95**	19.26	19.57	19.89	20.20	20.51	20.67
20.36	20.51	20.83	21.14	21.46	21.77	5	**22.08**	22.40	22.71	23.02	23.34	23.65	23.81
23.49	23.65	23.96	24.28	24.59	24.90	6	**25.22**	25.53	25.84	26.16	26.47	26.78	26.94
26.63	**26.78**	**27.10**	**27.41**	**27.73**	**28.04**	7	**28.35**	**28.67**	**28.98**	**29.29**	**29.61**	**29.92**	30.08
29.76	29.92	30.23	30.55	30.86	31.17	8	**31.49**	31.80	32.11	32.43	32.74	33.05	33.21
32.90	33.05	33.37	33.68	34.00	34.31	9	**34.62**	34.94	35.25	35.56	35.88	36.19	36.35
36.03	36.19	36.50	36.82	37.13	37.44	10	**37.76**	38.07	38.38	38.70	39.01	39.32	39.48
39.17	39.32	39.64	39.95	40.27	40.58	11	**40.89**	41.21	41.52	41.83	42.15	42.46	42.62
42.30	42.46	42.77	43.09	43.40	43.71	12	**44.03**	44.34	44.65	44.97	45.28	45.59	45.75
43.87	44.03	44.34	44.65	44.97	45.28	13	**45.59**	45.91	46.22	46.54	46.85	47.16	47.32

7.7. Set-point values 10-60 °C bar scale (NTC sensor 10 kΩ @ 25 °C)

- SP Adj						10 - 60 °C		+ SP Adj					
-6	-5	-4	-3	-2	-1	SP		1	2	3	4	5	6
2.00	2.50	3.00	3.50	4.00	4.50	1	**5.00**	5.50	6.00	6.50	7.00	7.50	8.00
7.00	7.50	8.00	8.50	9.00	9.50	2	**10.00**	10.50	11.00	11.50	12.00	12.50	13.00
12.00	12.50	13.00	13.50	14.00	14.50	3	**15.00**	15.50	16.00	16.50	17.00	17.50	18.00
17.00	17.50	18.00	18.50	19.00	19.50	4	**20.00**	20.50	21.00	21.50	22.00	22.50	23.00
22.00	22.50	23.00	23.50	24.00	24.50	5	**25.00**	25.50	26.00	26.50	27.00	27.50	28.00
27.00	27.50	28.00	28.50	29.00	29.50	6	**30.00**	30.50	31.00	31.50	32.00	32.50	33.00
32.00	**32.50**	**33.00**	**33.50**	**34.00**	**34.50**	7	**35.00**	**35.50**	**36.00**	**36.50**	**37.00**	**37.50**	38.00
37.00	37.50	38.00	38.50	39.00	39.50	8	**40.00**	40.50	41.00	41.50	42.00	42.50	43.00
42.00	42.50	43.00	43.50	44.00	44.50	9	**45.00**	45.50	46.00	46.50	47.00	47.50	48.00
47.00	47.50	48.00	48.50	49.00	49.50	10	**50.00**	50.50	51.00	51.50	52.00	52.50	53.00
52.00	52.50	53.00	53.50	54.00	54.50	11	**55.00**	55.50	56.00	56.50	57.00	57.50	58.00
57.00	57.50	58.00	58.50	59.00	59.50	12	**60.00**	60.50	61.00	61.50	62.00	62.50	63.00
62.00	62.50	63.00	63.50	64.00	64.50	13	**65.00**	65.50	66.00	66.50	67.00	67.50	68.00

For the transducers with 4-20 mA outputs, use the following conversion calculation: 4-20 mA scale = 16 mA : bar scale = value in bar for 1 mA

To read the mA value : multimeter scale in Vdc between IN & GND with 0.1 Vdc = 1 mA

8. TECHNICAL SPECIFICATIONS

8.1. Power supply:

Voltage: 230 Vac (±10%)
Frequency: 50/60 Hz (with manual selection using J5)

8.2. Current:

Rated current (RMS) @ 50 °C room temperature:

ESY-1-08	8 A ≤ 50 °C	> 50 °C -0,4 A/°C
ESY-1-12	12 A ≤ 50 °C	> 50 °C -0,4 A/°C
ESY-1-16	16 A ≤ 50 °C	> 50 °C -0,4 A/°C
ESY-1-20	20 A ≤ 50 °C	> 50 °C -0,4 A/°C

Overload: 150% of rated current (=10" every 3')

8.3. Power:

Absorbed: 3 VA (command circuits)
Dissipated in room: 11.2 W @ 8 A (RMS)
16.8 W @ 12 A (RMS)
22.4 W @ 16 A (RMS)
28.0 W @ 20 A (RMS)

8.4. Input signals and contacts:

Analog:

OM (Default)	IN1: 4 - 20 mA (Ri = 100 Ω) IN2: 4 - 20 mA (Ri = 100 Ω) IN3: NTC 10 kΩ @ 25 °C IN4: 0-10 V (Ri = 10 kΩ)
OB	IN1: 4 - 20 mA (Ri = 100 Ω) IN2: 0-5 V IN3: NTC 10 kΩ @ 25 °C IN4: 0-10 V (Ri = 10 kΩ)
OV	IN1: 0-5 V IN2: 0-5 V IN3: NTC 10 kΩ @ 25 °C IN4: 0-10 V (Ri = 10 kΩ)
OX	IN1: 4 - 20 mA (Ri = 100 Ω) IN2: NTC 10 kΩ @ 25 °C IN3: NTC 10 kΩ @ 25 °C IN4: 0-10 V (Ri = 10 kΩ)

Logics:

SP2	Contact for SP1/SP2 selection (when the optional plug is present)

8.5. Output signals and contacts:

Auxiliary power:

OM	V1: 24 Vdc (+10/-20%), ≤ 25 mA V2: 24 Vdc (+10/-20%), ≤ 25 mA +10 V: 10 Vdc (±1.0%) OUT: 0-10 V output (MAX 10 mA)
OB	V1: 24 Vdc (+10/-20%), ≤ 25 mA V2: 5 Vdc (±1.0%) +10 V: 10 Vdc (±1.0%) OUT: 0-10 V output (MAX 10 mA)
OV	V1: 5 Vdc (+1.0%) V2: 5 Vdc (±1.0%) +10 V: 10 Vdc (±1.0%) OUT: 0-10 V output (MAX 10 mA)
OX	V1: 24 Vdc (+10/-20%), ≤ 25 mA V2: 24 Vdc (+10/-20%), ≤ 25 mA +10 V: 10 Vdc (±1.0%) OUT: 0-10 V output (MAX 10 mA)

8.6. Protections:

Surge: As per EN61000-4-5: surge category II (4 kV)
Fuse 250 mA, 250 V
Auxiliary power: With PTC sensor for protection against short-circuit

8.7. Container (solo IP55):

Materials: GWPLAST 75 (UL-94 V0) temperature < 85 °C and aluminum
Pollution: High pollution

8.8. Insulation:

Case: Class I (use of grounded protection conductor)
Command: 4000 V between command input and mains voltage parts

8.9. Working conditions:

Working temperature: From -20 °C to 50 °C
Storage temperature: From -30 °C to 85 °C
Humidity: From 0% to 85% non-condensing relative humidity
Vibrations: ≤ 1 g (9.8 m/s²)

9. CIRCUIT BREAKER AND SHORT CIRCUIT PROTECTION

To protect the power module of the regulator from short circuits or severe overloads, it is necessary to use a fuse with $I^2t < 450\ A^2s$.

Model	Circuit breaker	Protection fuses - Mersen P/N				
		Type	Vac	Amp	I²t	P/N
ESY108	**16 A**	10x38	690	20	245 A²s	FR10GR69V20
ESY112	**16 A**	10X38	690	20	245 A²s	FR10GR69V20
ESY116	**20 A**	10X38	690	20	245 A²s	FR10GR69V20
ESY120	**25 A**	10X38	690	25	425 A²s	FR10GR69V25

For additional protection, a circuit breaker with a C-curve can be used, mounted upstream of the controller.
The installer must install these protections.

Surge arrester:
Electrical protection inserted between the regulator power supply and grounding, that protects the device from over voltages and transitory mains power surges up to 275 V.

10. MANUFACTURER'S DECLARATION

This instrument was designed and constructed for use in industrial environments and meets the following community directives:

- Low Voltage Directive (LVD) 2014/35/EU
- Electromagnetic Compatibility Directive (EMC) 2014/30/EU

11. DIRECTIVES AND TECHNICAL STANDARDS

The essential directive requirements are met by compliance with "generic standards" for the industrial environment.

11.1. EC - Declaration of conformity

Directive	EC standard code	Version
EMC 2014/30/EU	EN IEC 61800-3	2018
	EN IEC 61000-6-2	2019
	EN 61000-6-3	2007 +A1:2011
	EN IEC 55014-1	2021
	EN IEC 55014-2	2021
Safety 2014/35/EU	EN 61800-5-1	2007 +A1:2017 +A11:2021
	EN 60335-1	2012 +A13:2017 +A2:2019
	EN 60730-1	2017
RoHS	EN 50581	2012

11.2. UK - Declaration of conformity

Subject	Name	Version
EMC	BS EN IEC 61800-3	2018
	BS EN IEC 61000-6-2	2019
	BS EN 61000-6-3	2007 +A1:2011
	BS EN IEC 55014-1	2021
	BS EN IEC 55014-2	2021
Safety	BS EN 61800-5-1	2007 +A1:2017 +A11:2021
	BS EN 60335-1	2012 +A13:2017 +A2:2019
	BS EN 60730-1	2017
RoHS	BS EN 50581	2012

The instrument must be disposed of according to local electric and electronic device disposal regulations

Manufactured by SELPRO - Fan Speed Controllers Specialist
SELPRO Srl – Via Piamarta 5/11 – 25021 Bagnolo Mella (BS) – Italy – selpro.it – info@selpro.it – Tel. +39 0306821611 – Fax +39 030622274