Digital controller

EPS

Evaporative
Panels System

Instruction manual
Rev.2.0 – SET. 2024

SELPRO

Fan Speed Controllers Specialist

Contents

CAUTION *5*
SAFETY STANDARDS *6*
1. PRESENTATION 7
1.1. GENERAL DESCRIPTION 7
1.2. TECHNICAL SPECIFICATIONS 9
1.3. MECHANICAL DIMENSIONS 12
1.4. CONNECTION, DISPLAY AND CONTROL DEVICE LAYOUT 13
2. START-UP QUICK GUIDE 14
3. INSTALLATION AND ELECTRIC CONNECTIONS 16
3.1. INSTALLATION 16
3.2. ELECTRIC POWER CONNECTION 16
3.3. SENSOR AND COMMAND SIGNAL CONNECTIONS 17
3.3.1. M1 TERMINAL BOARD: ANALOG INPUTS 17
3.3.1.1. ANALOG SIGNAL AND TRANSDUCER CONNECTIONS 18
3.3.1.2. CONNECTION WITH RGM OR ECP: 1-10 VDC ANALOG SIGNAL COMMAND 19
3.3.1.3. CONNECTION WITH ECM OR DSV: 1-10 VDC ANALOG SIGNAL COMMAND 19
3.3.2. M2 TERMINAL BOARD: ON / OFF LOGIC INPUTS 20
3.3.3. M3 TERMINAL BOARD: MODULATING MOTORIZED VALVE CONTROL OUTPUTS 21
3.3.4. M4 TERMINAL BOARD: OPEN / CLOSED SOLENOID VALVE CONTROL OUTPUTS 22
3.3.5. M5 TERMINAL BOARD: RL1 AND RL2 SERVICE RELAYS 23
3.3.6. PB1073C MODULE: FOR RS-485 ISOLATED SERIAL LINE (MODBUS) 24
3.3.6.1. RS-485 SERIAL CONNECTION DIAGRAM 25
4. DISPLAY AND CONTROL DEVICES 26
4.1. DISPLAY AND BUTTONS 26
4.2. EPS STATUS MESSAGES 26
4.3. DISPLAY CONTRAST ADJUSTMENT 27
4.4. DIP SWITCHES SETTINGS: SW1 27
4.5. SIGNAL LEDS 28
5. OPERATING MODE 29
5.1. START CONDITIONS 29
5.2. WATER SUPPLY IN "ENERGY & WATER SAVING" MODE 29
5.3. WATER SUPPLY IN "ENERGY SAVING" MODE 31
5.4. DRIVE MASTER DEVICE SETTINGS 33
5.5. SYSTEM WATER DRAIN (DRAINAGE) 34
5.5.1. MANUAL SYSTEM DRAIN ("MAN. DRAINAGE") 34
5.5.2. AUTO DRAIN: AUTOMATIC SYSTEM DRAIN ("AUT. DRAINAGE") 34
5.6 ADIABATIC PANEL PURGING 34
6. PARAMETERS 35
6.1. LIST OF PARAMETERS VISIBLE ON THE DISPLAY 35
6.2. UNMODIFIABLE MEASURED QUANTITIES, MINIMUM AND MAXIMUM VALUES 36
6.3. MODIFIABLE OPERATING PARAMETERS, DEFAULT VALUES, MINIMUM AND MAXIMUM VALUES 36
6.4. RECALL DEFAULT CONFIGURATIONS, OPERATION MODE MENU 37
6.5. DISPLAY PARAMETERS, HOME & INFO MENU, EDIT PARAMETERS CONFIGURATION MENU 39
6.5.1. “EPS PARAMETERS” 41
6.5.2. “PROGRAMMABLE ALARM” 44
6.5.3. “PID PARAMETERS” 45
6.5.4. “MODBUS PARAMETERS” 46
6.5.5. “RTC: REAL TIME CLOCK” 47
7. MANUAL OUTPUT CONTROL 48
8. ALARM AND WARNING MESSAGES 50
9. EC - DECLARATION OF CONFORMITY 52
9.1. UK - DECLARATION OF CONFORMITY 52
10. PRODUCT DISPOSAL 52

Instruction manual update

Publication date	Code	Firmware version	Update
SET 2024	PPEPSEN-R02.00-0	2.0	− Removed the "Ice Temperature" alarm with its consequences (the RL1 alarm relay is not de-energized) replaced with the "T.Ice" signal in the EPS status messages (par.4.2 of the manual) − Changed the writing of the excludable alarm "Low Flow" to "Check Flow 75:125%" − Changed default values: VQmin from 60 to 70%, VQstop from 30% to 50%, Qmax from 4 l/m to 3l/m − Function modified for SW1 switch 6: activates the display of the temperature and pressure values with Imperial units of measure (°F and psi) − Chapter 9 renamed to 10 − New Chapter 9: Declarations of Conformity
JUNE 2021	PPEPSEN-R01.00-1	1.3	- Modified operation in the presence of flow errors, differentiating the UnderFlow and OverFlow conditions
AUG 2020	PPEPSEN-R01.00-0	1.2	- General Description, page 8 modified drawing (Y2 and Y3 = NO) updated title below. - Para. 3.3.6.1 “RS-485 Serial Wiring Diagram” corrected - Para. 4.4 “Set-up Dip Switch SW1” operations modified SW1-1 EPS parameters access: OFF Lock / ON Allow SW1-2 Hysteresis Tdry -> Twet adjustable to 1 °C or 3 °C (default) SW1-3 Stop active if: S2 open or S2 closed - Para. 4.5, DL5, S8, updated meaning, aligned meaning S8 - Para. 5.1 Overturned hysteresis action Tdry<->Twet: temperature dropping, switch Wet -> Dry when Temp. < Tdry; temperature increasing, switch Dry -> Wet when Temp > Tdry+Hyst. - Para. 5.1 “Activation conditions” added Tdry <-> Twet and Tice operating graphs. - Para. 5.5 Water system drainage modified drawing and text - Para. 5.6 Adiabatic panel purging entered description - Para. 6.3 Modified minimum Tdry to be set at 4 °C, maximum unchanged. - Tice hysteresis taken to 2 °C, fixed unchangeable. bugs to be checked: 1. When VQMAX and VQMIN are the same, the regulated flow was QMIN and not QMAX as required. 2. Dry-Wed switching was OK on the display but not in the state read on the ModBus (I. Reg. 126 bit4).
09/10/2018	PPEPSEN-R00.00/-0	1.1	First publication

CAUTION

The installation must be carried out by a qualified operator who must carefully complete the electrical connections, fasten the flexible cables in their final position and start up the system.

Incorrect installation of the EPS controller can cause damage to people or property; observe and follow the instructions in this manual and the safety regulations in force.

Installation must comply with the intended use; the device must be subjected, if required, to maintenance in a non-defective manner, safeguarding the safety of people, pets and tangible goods.

Upon receipt of the EPS device, check the integrity of the packaging; if there are damages attributable to transport, they must be reported immediately to the carrier or within legal terms.

The buyer must first ascertain the suitability of the product for which it intends to allocate it, assuming all arising risks and liabilities.

The EPS device has been designed to control a system with evaporative panels, depending on a 1-10 Vdc voltage command signal.

The device is built for industrial use and therefore meets the standards of compliance for industrial environments.

The use of the device for purposes other than those described above constitutes improper use.

No liability can be attributed to accidents, loss or damage resulting from failure to comply with these provisions.

We cannot be held liable for any errors contained in catalogs, publications or other written documents; the information contained in this manual is not binding and we reserve the right to make any changes to the products, at any time and without prior notice, that will be convenient for production purposes or useful for improving its operation and performance.

Description of the symbols used in the manual

Caution

Important information

CE EMC LVD

In accordance with:
CE markings, electromagnetic emissions, low voltage

Factory Default — The highlighted features are **STANDARD** factory settings

Product disposal



SAFETY STANDARDS



This unit has been designed to offer optimal and safe operation, provided it is used and installed by qualified personnel in a suitable electrical environment.

When installing the EPS device **pay particular attention** to the following:

1. **Scrupulously follow the instructions contained in this manual and observe the current safety regulations**
2. **Do not tamper with or remove internal EPS device components; this null and voids the warranty and can cause damages. The controller does not contain parts that can be repaired by the user.**
3. **The EPS device must be equipped with an effective grounding connection; the installer must ensure that grounding is carried out according to current standards and regulations.**
4. **The user must be protected against electrical shock, regulated units must be equipped with overload protection, as per current pertinent regulations.**
5. **Do not power the EPS device without the protective cover, under no circumstances touch the electrical circuit parts with the power supply switched on.**
6. **Reassemble and make sure the external protection lid is fully closed.**
7. **Do not alter or damage equipment identification stickers.**



Before proceeding with installation, please carefully read this manual which illustrates the procedures necessary for correct EPS device commissioning



1. Presentation

The EPS controller is a digital microprocessor unit designed to measure the amount of water supplied to the adiabatic panels (A.P.) used with the ventilated heat exchangers. It is controlled by the analog 1-10 Vdc signal proportional to the fan speed, generated by the ECP, ECM, RGM and DSV controllers.
The EPS controller is optimized for use with the BELIMO LR24A-SR modulating rotary actuator and the corresponding ball valve, as well as the BELIMO FLOW SENSOR 22PF-UX flow meters
The water flow rate is regulated by two modulating valves A and B, one on each side of the exchanger, depending on the fan speed; one or two constant flow values are supplied, which can be modified by the operator.
Some relay ON/OFF outputs allow you to control solenoid valves and pump for supply and drain.

1.1. General description

The EPS controller simultaneously controls two modulating valves (named A and B), three open/closed solenoid valves and the contactor for the electric pump, using the signals coming from three analog voltage inputs (Vdc) and two NTC inputs designed to read the signals produced by control regulators, flow transducers (l/m) or temperature (°C/°F).

The EPS is equipped with an input for an NTC temperature probe to determine if the external temperature allows the use of A.P.s. (WET) or not (DRY) A.P.s. The same probe can trigger an alarm if the external temperature is close to the ice formation temperature.
Two operating modes are possible in WET mode:

1. **Energy Saving**: when the fan speed exceeds the maximum value set for each of the two A.P. rows, the same well-defined water flow is delivered; if the fan speed subsequently falls below a set minimum value, the delivery is cut-off. The minimum and maximum fan speed levels and the water flow can be changed by the operator;

2. **Energy & Water Saving:** the cycle is similar to the one described above with the addition of an intermediate fan speed value and relative water flow rate. When it is on, it involves a reduced water supply, so that both electricity and water are saved simultaneously.

N.B. The fan speed is in no way constrained by the operation of the EPS and is always free to change in order to adapt to the operating conditions and minimize fan energy consumption.

There are relay ON/OFF outputs to enable the system power supply, for example through a pump, and the total water drain at the end of the working cycle. For more details see Chapter 5.

Simultaneously with the enabling of the power supply, the dispensing hours counter is activated, which can not be reset, with the possibility of counting up to 99,999.9 hours of operation.

The device has the following analog inputs:
- No. 1 Input for the 1-10 Vdc command signal;
- No. 1 External temperature NTC probe input for anti-ice protection and Dry/Wet switching;
- No. 1 NTC plenum temperature probe input, inside the exchanger downstream of the A.P., read only.
- No. 2 0-10Vdc inputs for flow transducers to read the amount of water supplied to the two A.P. supply ramps

A plug board is available with an **isolated half-duplex RS-485 serial line**, managed with **MODBUS (RTU)** SLAVE mode protocol for connections with the remote supervision system.
The parameter specifications are described in the document "Modbus RTU description for EPS".

Further details on the Modbus protocol specifications are available on the internet at the "modbus.org" website; in particular, the following documents have been used and have full validity:
- **Modbus Over Serial Line, Specification & Implementation Guide V1.0;**
- **Modbus Application Protocol Specification V1.1.**

A specific control and supervision software is available for the "**PC host**" called "Clima-Sinergy" which is able to communicate with one or more EPS slave units.

Unit of measure: from version 2.0 of the EPS firmware, the temperature and pressure values can be viewed with Imperial units of measure (°F e psi). Therefore, where the text indicates the unit of measure available in °C, it is considered to be °F, and where bar is indicated, it is considered to be psi. For the conversion values, use the following formulas:
- Temperature: °F = 32+ (°C x 9/5)
- Pressure: psi = bar x 14.5

The following diagram shows the basic scheme for using the EPS controller.

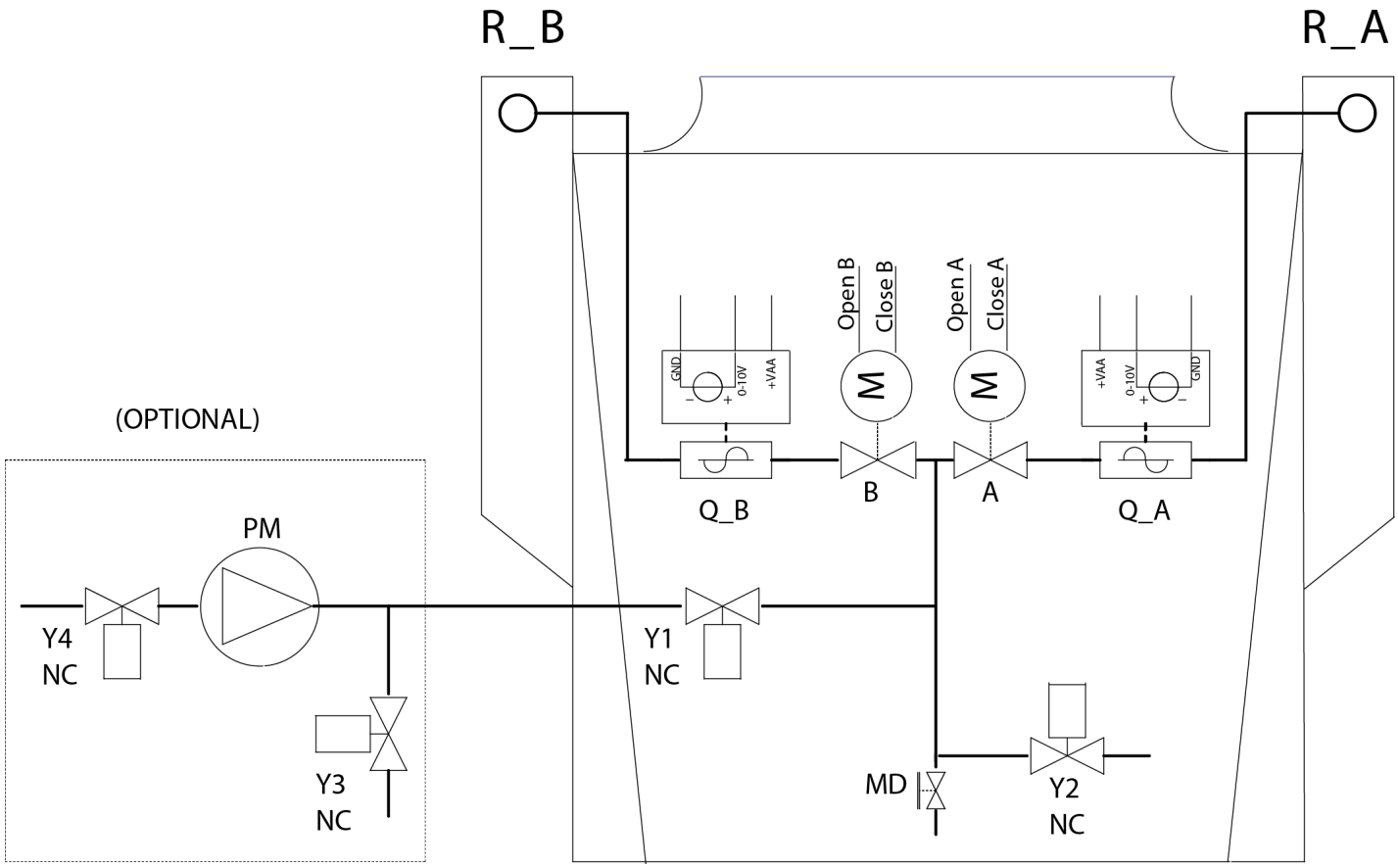

PM	Pump (optional)
Y1	Open/closed solenoid valve, NC, water supply on the machine
Y2	Open/closed solenoid valve, NO, water drain on the machine
Y3	Open/closed solenoid valve, NO, water drain on user side of the system (optional)
Y4	Open/closed solenoid valve, NC water supply on system user side (optional)
MD	Full drain tap, manually operated by the operator
A	Two-way modulating valve for R_A ramp flow regulation R_A 22PF-1UC (DN15)
B	Two-way modulating valve for R_B ramp flow regulation R_B 22PF-1UC (DN15)
Q_A	Transducer for R_A ramp water flow measurement R_A LR24A-SR
Q_B	Transducer for R_B ramp water flow measurement R_A LR24A-SR

1.2. Technical specifications

Power supply	Voltage	Single phase 24 Vac +/-10% (50/60 Hz)
Power	Maximum absorbed	Total 12 W without external solenoid valve control supply
Main functions	**Adiabatic panel supply regulation**	It receives the 1-10 Vdc voltage command from an RGM, ECM, ECP, DSV controller through the **IN1** input: • In "**Dry**" mode, it completely closes the power supply to the A.P.s, switches off the pump, activates the drain valve(s). • In "**Wet Work**" mode, it turns on the water supply, according to the signal at the IN1 input, it adjusts the water flow rate delivered to the A.P.s with the R_A and R_B ramps, through the A and B valves. The supply can be the following modes: o "**energy saving**" (only one flow value, only one level on the IN1 signal); o "**energy and water saving**" (two flow values, two levels on the IN1 signal). For further details see Chapter 5.
	Water system drain	The system water is drained by opening the **RL3** and **RL6** relays (water supply), closing **RL4** and **RL5** relays (drain solenoid valve activation) and forcing open the "**A**" and "**B**" modulating valves. The operation duration is set by parameter **T Drain** (see chapter 6). The device is set for the following drain start modes, the different options can be used according to plumbing settings: • **Total system drain:** can be manually activated by the operator with one of the methods described in **paragraph 5.5.** **Note** The drain does not start if water is being supplied to the adiabatic panels. • **Auto drain due to system inactivity:** if the fan speed drops below **VQdrain** and remains there for at least **DDelay** time. • **Cyclic auto drain:** it is started with the cyclical rate established by the **Drain Wait** parameter, from once a day to once every N days, at the time set by the **Drain Start** parameter.
	Clean up adiabatic panels	This occurs when the adiabatic panels are supplied with the "**QPurge"** quantity of water for a **"TPurge"** period of time. Can only be started by the ON / OFF S8 input**.** It can always be started and does not depend on the status of the EPS, except for the presence of alarms.
	Surveillance input command	Checks that the voltage at the control input **IN1** is always between 1 Vdc and 11 Vdc, checking the connection to the control unit. If it is < 1 Vdc or > 11 Vdc, it sends an alarm signal (see Chapter 5 and Chapter 8).
	Monitoring external temperature thresholds	It reads the external temperature via the **IN2** input connected to an NTC 10 kohm @ 25 °C/77 °F probe. Two adjustable temperature thresholds are available • **Antifreeze temperature** adjustable from **2 to 12 °C**/35.6 to 53.6 °F (Default 8 °C, hysteresis 2 °C). If the temperature is lower than the set value, it sends an alarm signal. • **Dry/Wet Temperature:** adjustable from **4 to 40 °C**/39.2 to 104 °F (default 27 °C, hysteresis 1 or 3 °C) DRY operation design temperature. If the temperature is under the set value, it enables**"Dry"** operations, if higher, **"Wet"** operations.
	Temperature plenum	It reads the air temperature in the area downstream of the adiabatic panels before the fans (called "plenum") through **IN3** input connected to an NTC 10 kohm @ 25 °C/77 °F probe.
	Hour meter	From **0 to 99,999.9 h** cannot be reset, to count total water supply time by EPS. The count is updated every minute, saving every 15 minutes.

<table>
<tr><td rowspan="8">Input signals</td><td>Analog signal inputs</td><td colspan="4">The device is set to work with the following input signals:

<table>
<tr><th></th><th>Input signal</th><th>Ri: Input resistance</th><th></th><th>Alarm thresholds</th></tr>
<tr><td>IN 1</td><td>1 – 10 Vdc</td><td>18 kohm</td><td>Command input</td><td>0.7V < IN1 < 11V</td></tr>
<tr><td>IN 2</td><td>NTC</td><td>-</td><td>Ambient temperature</td><td>-4°C < IN2 < +68°C</td></tr>
<tr><td></td><td></td><td></td><td></td><td>24.8 °F< IN2 < +154 °F</td></tr>
<tr><td>IN 3</td><td>NTC</td><td>-</td><td>Temperature plenum</td><td>No alarm</td></tr>
<tr><td>IN 4</td><td>0 – 10 Vdc</td><td>18 kohm</td><td>Ramp A water flow rate</td><td>0.2V < IN1 < 11V</td></tr>
<tr><td>IN 5</td><td>0 – 10 Vdc</td><td>18 kohm</td><td>Ramp B water flow rate</td><td>0.2V < IN1 < 11V</td></tr>
</table></td></tr>
<tr><td rowspan="3">Inputs for ON / OFF contacts (logic)</td><td>S7</td><td colspan="3">Manual drain command input (manual drainage)</td></tr>
<tr><td>S8</td><td colspan="3">Manual drain A.P. purge command input (purging)</td></tr>
<tr><td>S2</td><td colspan="3">Start / Stop command input (Closed = Stop)</td></tr>
<tr><td>Serial Line</td><td>RS485 Serial Line</td><td colspan="4">Isolated RS485 serial line: dedicated to “PC Host” connection, controlled with ModBus RTU protocol in “SLAVE” mode, further details in paragraph 3.3.6.</td></tr>
<tr><td>Manual commands</td><td>Manual drain command</td><td colspan="4">SB2: internal button, replicated in the terminal board, allows the system to be drained at the end of the season.</td></tr>
<tr><td rowspan="3">Signal outputs</td><td>Transducer power supply</td><td colspan="4">2 (two) +22 Vdc ±10%, 40 mA non stabilized outputs, protected against short-circuit.</td></tr>
<tr><td>Potentiometer sensor supply</td><td colspan="4">1 (one) +10 Vdc stabilized output with protection, for potentiometer supply, remote manual control.</td></tr>
<tr><td>RL1 relay</td><td colspan="4">NO 5 A 250 Vac, 30 Vdc / NC 3 A 250 Vac, 30 Vdc contact, closed with device running without alarms.</td></tr>
<tr><td>RL2 relay</td><td colspan="4">NO 5 A 250 Vac, 30 Vdc contact, closed with water supply consent.</td></tr>
<tr><td rowspan="5">Power outputs</td><td>RL6: pump control</td><td colspan="4">No. 1 NO 16 A 250 Vac relay, power-free contact (with the possibility of using the local power supply of the 24 Vac solenoid valves).</td></tr>
<tr><td rowspan="3">RL3, RL4, RL6 Solenoid valve control ON/OFF</td><td colspan="4">No. 3 NO 16 A 250 Vac relays supplied as follows</td></tr>
<tr><td>Voltage</td><td colspan="3">24 Vac</td></tr>
<tr><td>Maximum absorbed</td><td colspan="3">100 V A (max)</td></tr>
<tr><td rowspan="3">Modulating motorized valve control</td><td colspan="4">No. 2 pairs of static outputs protected against short-circuit 24 Vdc / 500 mA max.</td></tr>
<tr><td>Voltage</td><td colspan="3">24 Vdc</td></tr>
<tr><td>Maximum absorbed</td><td colspan="3">12 V A</td></tr>
<tr><td rowspan="2">Display and Keyboard</td><td>Display</td><td colspan="4">Monochromatic LCD display consisting of 4 lines with 20 characters per backlit line.</td></tr>
<tr><td>Dial Pad</td><td colspan="4">Four keys with the following functions: UP (+) | DOWN (-) | ESCAPE | ENTER.</td></tr>
<tr><td rowspan="22">Signal led</td><td>DL1</td><td>Power</td><td>green</td><td>Logic board service power on.</td></tr>
<tr><td>DL2</td><td>CPU Run</td><td>green</td><td>Flashing: logic board microcontroller on.</td></tr>
<tr><td>DL3</td><td>Fail</td><td>red</td><td>One or more alarms triggered (see Chapter 8).</td></tr>
<tr><td>DL4</td><td>S7</td><td>yellow</td><td>Drain manual control input status (manual drainage).</td></tr>
<tr><td>DL5</td><td>S8</td><td>yellow</td><td>Manual purge command input status (manual purging).</td></tr>
<tr><td>DL6</td><td>S2</td><td>yellow</td><td>Start consent, lit = Start.</td></tr>
<tr><td>DL7</td><td>TX0</td><td>yellow</td><td>Serial 0, data in output.</td></tr>
<tr><td>DL8</td><td>TX1</td><td>yellow</td><td>Serial 1, data in output.</td></tr>
<tr><td>DL9</td><td>TX2</td><td>yellow</td><td>Serial 2, data in output.</td></tr>
<tr><td>DL10</td><td>RX0</td><td>yellow</td><td>Serial 0, data in input.</td></tr>
<tr><td>DL11</td><td>RX1</td><td>yellow</td><td>Serial 1, data in input.</td></tr>
<tr><td>DL12</td><td>RX2</td><td>yellow</td><td>Serial 2, data in input.</td></tr>
<tr><td>DL13</td><td>A open</td><td>yellow</td><td>OPEN command for modulating valve "A".</td></tr>
<tr><td>DL14</td><td>B open</td><td>yellow</td><td>OPEN command for modulating valve "B".</td></tr>
<tr><td>DL15</td><td>A close</td><td>yellow</td><td>CLOSE command for modulating valve "A".</td></tr>
<tr><td>DL16</td><td>B close</td><td>yellow</td><td>CLOSE command for modulating valve "B".</td></tr>
<tr><td>DL17</td><td>Out_3</td><td>green</td><td>RL3 relay status (on if RL3 = ON = energized).</td></tr>
<tr><td>DL18</td><td>Out_2</td><td>green</td><td>RL4 relay status (on if RL4 = ON = energized).</td></tr>
<tr><td>DL19</td><td>Out_1</td><td>green</td><td>RL5 relay status (on if RL5 = ON = energized).</td></tr>
<tr><td>DL20</td><td>Pump</td><td>green</td><td>RL6 relay status (on if RL6 = ON = energized).</td></tr>
<tr><td>DL21</td><td>OK (No Alarm)</td><td>green</td><td>RL1 relay status (on if RL1 = ON = energized).</td></tr>
<tr><td>DL22</td><td>Elv On</td><td>green</td><td>RL2 relay status (on if RL2 = ON = energized).</td></tr>
</table>

Case	**Protection rating**	**IP 00**
Working conditions	**Working temperature**	**-20 T 50** (from –20 °C to + 50 °C / from –4 °F to + 122 °F) for temperatures < -10 °C/ 14 °F use **S2** (stand-by regulation).
	Storage temperature	**-30 T 85** (from –30 °C to + 85 °C / from –22 °F to + 185 °F).
	Vibrations	Under 1 G (9.8 m/s^2).
Assembly	**Mounting**	Vertical wall-mount only with No. 4 holes Ø5 mm
Electrical connections	**Signal**	Terminals for flexible cable section from **0.14 to 1.5 mm² / 26-16 AWG C**.
	Power supply	Terminals for flexible cable section from **0.5 to 10 mmq / 20-6 AWG C**.
	Directive 2004/108/EC	**CEI EN 61800-3**: Variable speed electric drives. Part 3: electromagnetic compatibility requirements and specific test methods

1.3.Mechanical dimensions

IP00 panel indoor version

MODEL	A	B	C	D	E	F	∅ Mounting Holes
EPS IP00	194	168	136.5	221	198	165	5.0

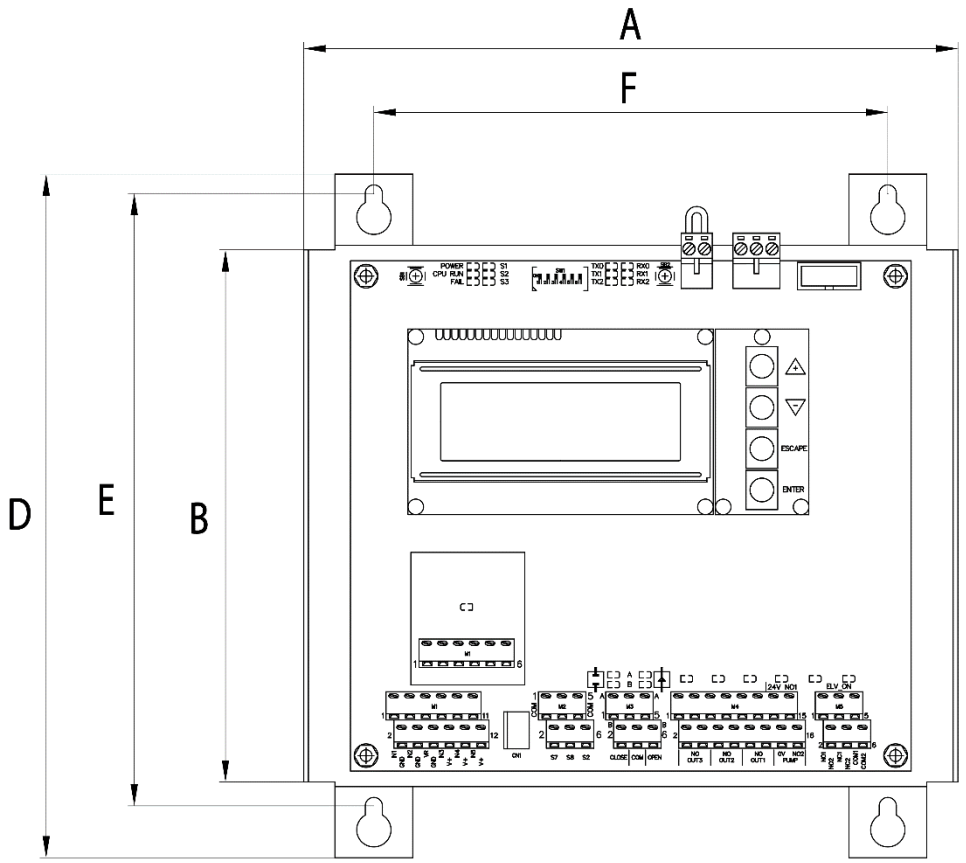

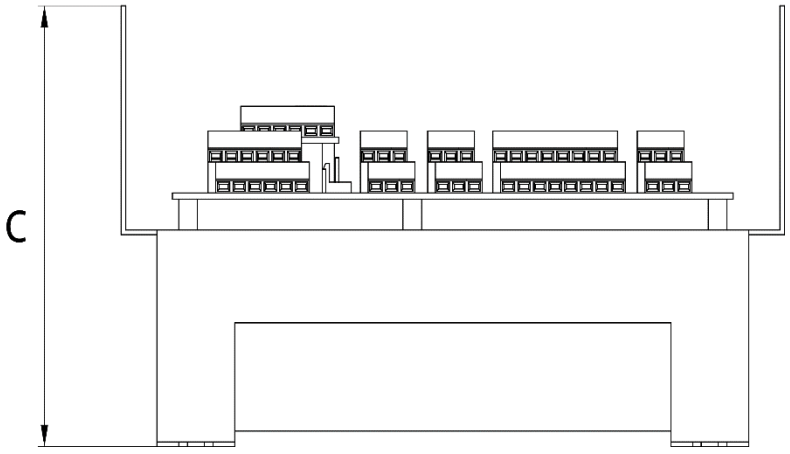

1.4.Connection, display and control device layout

IP00 panel indoor open execution 24 Vac power supply

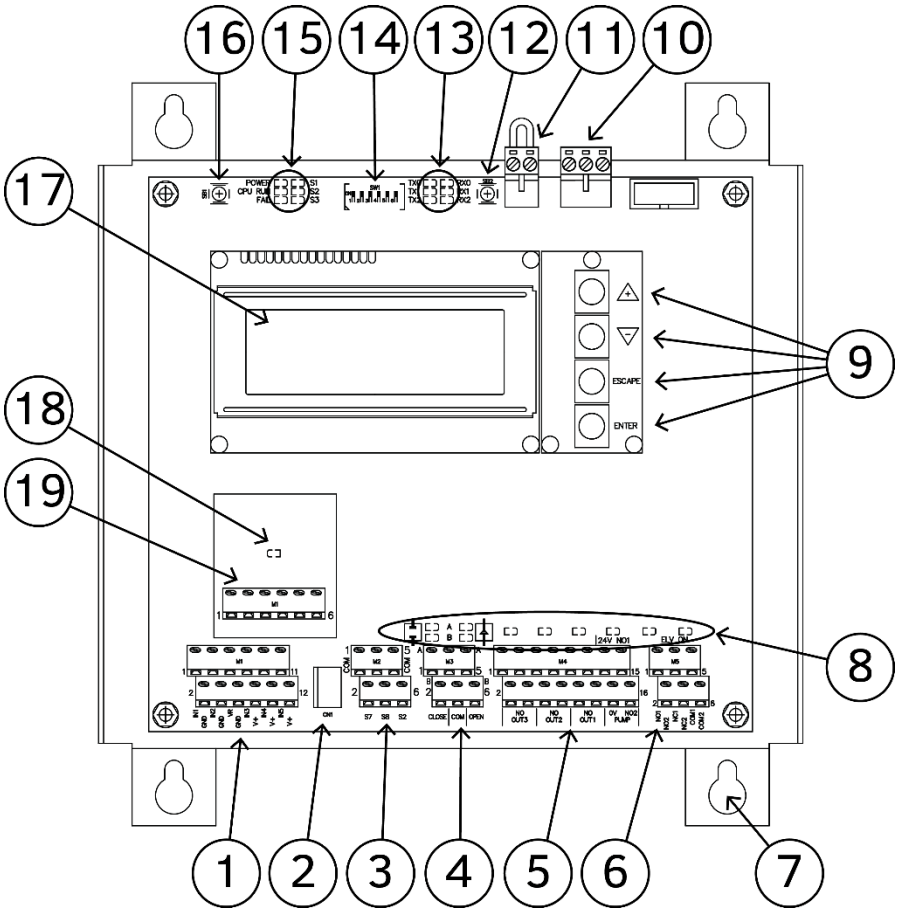

Key

1	**M1** terminal board for analog input signal connections
2	**CN1** connector for remote manual drain command key connection
3	**M2** terminal board for ON / OFF input connections (auxiliary contacts)
4	**M3** terminal board for modulating valve command connections
5	**M4** terminal board for Open/Closed solenoid valve and Pump command connections
6	**M5** terminal board for **RL1** and **RL2** relay connections
7	Support brackets for panel back wall mount
8	Modulating valve and service relay control output status signal LEDs
9	**UP (+) | DOWN (-) | ESCAPE | ENTER** keys (plug **PB1071A**)
10	**M7** terminal board for 24Vac power supply and grounding connections
11	**M6** terminal board for power switch connection
12	**SB2**: Manual internal DRAIN command key
13	Activity monitoring LEDs (RX / TX) on serial lines 0, 1, 2
14	Dip switches settings
15	Status, alarm and auxiliary input monitoring LEDs
16	**SB1**: Manual RESET button
17	Backlit LCD display, 4 alphanumeric 20-character rows
18	RS485 PB1073C serial interface board
19	RS485 PB1073C serial interface terminal board

2. Start-up quick guide

Reading this quick guide does not replace the in-depth and thorough study of this manual

This chapter is intended for users who already have good knowledge of the device and need a quick reference guide for commissioning the device. For further details see the following chapters.

1. Check the use for which the appliance is intended: used with the ventilated heat exchangers equipped with adiabatic panels (A.P.), in order to dose the amount of water supplied to the A.P.s according to fan speed. Controlled by an analog 1-10 Vdc signal proportional to fan speed, see Chapter 1

2. Install the device following the instructions in para. 3.1**.**

3. Make the electrical power and signal connections, check that they are carried out correctly and correspond to the use for which the device is intended, as defined above.

   - **Power supply:** IP00 inside panel version, see paragraph 3.2

   - **1-10 Vdc command signal from master controller:** connected to **M1** terminal board (see paragraph 3.3.1)
     - to RGM or ECP controller see paragraph 3.3.1.2
     - to ECM or DSV controller see paragraph 3.3.1.3

   - **Analog transducer inputs**: connected to **M1** terminal board (see paragraph 3.3.1.1).
     They are essential for device operations.

   - **ON / OFF logic inputs (optional)**: connected to **M2** terminal board, see paragraph 3.3.2 for the wiring diagram. They are not essential for device operations.

   - **Open / stop / close control outputs for modulating motorized valves: M3** terminal board (see paragraph 3.3.3) for valve A and B connections. They are essential for device operations.

   - **ON / OFF command relay outputs**: **M4** terminal board, see paragraph 3.3.4 for the wiring diagram. Used for ON / OFF solenoid valve control for water supply and drain on the machine (minimum required), external supply system supply, drain and pump control.

   - **Service relays (optional)**: connected to **M4** terminal board, see paragraph 3.3.5 for the wiring diagram. They are not essential for device operations

4. If requested, modify the settings on dip switch **SW1** (see paragraph 4.4).

5. Power the EPS device and recall the default configuration (Operation mode menu) appropriate to the number of fans served by the A.P.s, see paragraph 6.4.

6. Wait for the HOME page to appear (see section 4.1 and 6.5).

7. Using the info menu, see paragraph 6.5, check the values of the default parameters just loaded. If changes are needed, continue as follows or skip to point **8.**

8. Open the parameters editing sub-menu using the "Configuration menu", see paragraph 6.5. Each parameter is assigned a default value, defined in the table in section 6.3, which can be edited according to system features.

   a. **Set or edit "1: EPS Parameters"**: see paragraph 6.5.1; make sure to check default values carefully.

   b. **Set or edit "2: Programmable Alarm"**: see paragraph 6.5.2; make sure to check default values carefully.

   c. **Set or edit "3: PID Parameters"**: see paragraph 6.5.3; default values are generally correct.

   d. **If required edit "4: MODBUS Parameters"**: see paragraph 6.5.4; to be used only with the optional PB1073C plug for the ModBus RS485 connection.

   e. **Set or edit "5: R.T. CLOCK Setup"**: see paragraph 6.5.5; to align the internal clock with the local clock.

9. **Manual cable check, use of manual output controls**: see chapter 7; to check wiring completed in previous point **"2"** and the proper operation of the connected actuators.

10. **Check that the values of the parameters** that manage the analog output connected to IN1 on the master drive, which pilots the EPS (ECP, ECM, RGM, DSV), are set as required, see paragraph 5.4**.**

3. Installation and electric connections

The installation must be performed according to best working practices only by a qualified operator

3.1. Installation

Install the device in environments with a temperature between **-20 °C/-4 °F** and **+50 °C/122 °F**, otherwise the device's proper operation and integrity may be compromised.

If the installation involves exposure to temperatures equal to or less than **-10 °C/14 °F** avoid continuously turning the power to the controller on and off: a constant power supply keeps the controller at working temperature and prevents condensation from forming. To stop operations, use the terminal board contact **S2 = STOP**, see paragraph 3.3.2.

Install the controller in a housing that guarantees the protection rating suitable for the weather conditions, preferably in a location protected from direct sunlight and rain.

3.2. Electric Power Connection

Complete electrical connections with a **1.5 mm² / 22-14 AWG Cu** rated section flexible cable

Make the connection as shown in the following drawings.

The power cables must be installed separately from the signal cables, maintaining a distance of at least 100 mm.
Do not mix power cables and signal cables in the same conduit; in the event of a crossover, install with a 90° angle.
Protect power cables with **2 A / 500 V** delayed fuses.

Before turning on unit power, carefully check the connections made.

If you have a "disturbed" mains power supply, also due to the presence of other electrical power components that make it irregular (for example: power contactors), we recommend installing a supplemental **"surge arrester"** filter directly on the controller power supply.

IP00 version for single-phase supply voltage 24 Vac +/- 10%, 50/60 Hz

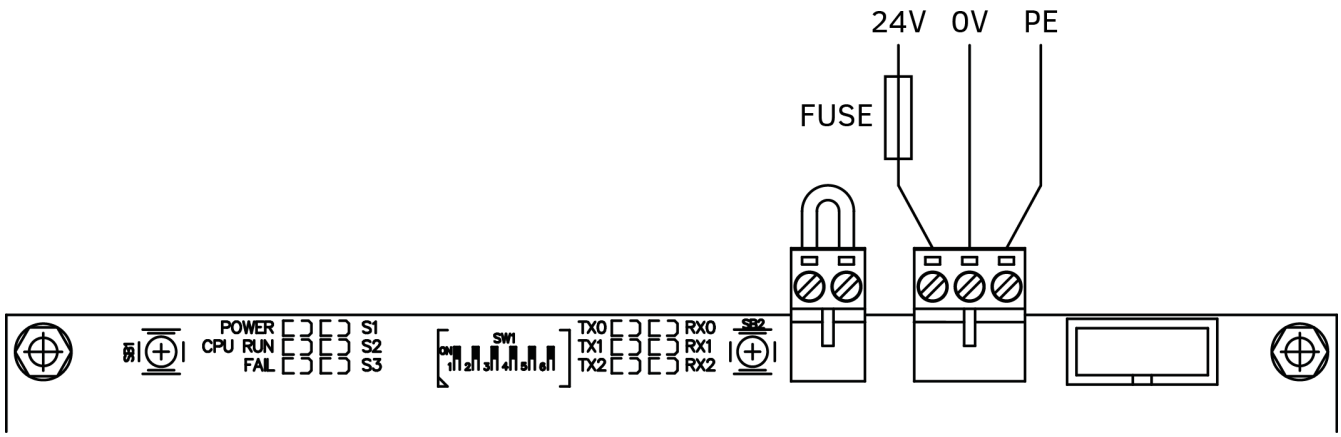

3.3. Sensor and command signal connections

The EPS controller is designed for direct connection of sensors, signals and auxiliary contacts to support regulation.
The figure below shows the details of the connection terminal boards on the board: M1 - M2 - M3 - M4 - M5.

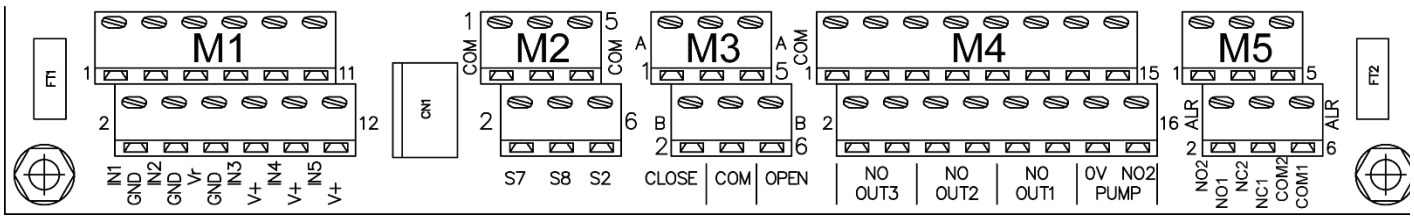

Note: Signal connections longer than 30m must be made with shielded cable, with the shield connected to the ground of the EPS controller.

3.3.1. M1 TERMINAL BOARD: Analog Inputs

The **M1** terminal board is designed to connect the 1-10 Vdc control input and up to four transducers, necessary for device operations.
The table below shows the details of the signals for each terminal and the connection diagrams for the various default configurations available.

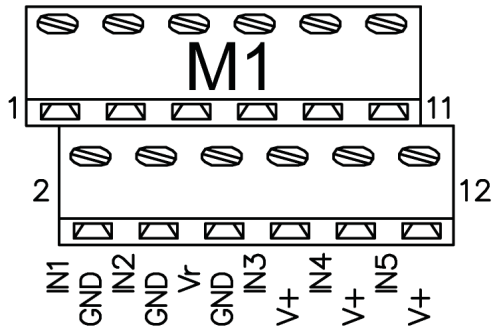

Terminal board M1		Description
1	**IN1**	Analog input 0-10 Vdc for the 1-10 Vdc command signal coming from the fan control regulator (RGM, ECP, ECM, DSV, ...)
2	**GND**	Reference grounding
3	**IN2**	Analog input for NTC 10 kohm @ 25 ° C/77 °F for external temperature reading
4	**GND**	Reference grounding
5	**Vr**	Power output +10 Vdc, max 10 mA, stabilized and protected against short circuit
6	**GND**	Reference grounding
7	**IN3**	Analog input for NTC 10 kohm @ 25 ° C/77 °F for reading the plenum temperature downstream from the A.P.s
8	**+V**	Output +22 Vdc, 40 mA not stabilized for transducer power supply, protected against short circuit
9	**IN4**	0…10V input for **A.P. ramp A nozzle power flow transducer**
10	**+V**	Output +22 Vdc, 40 mA not stabilized for transducer power supply, protected against short circuit
11	**IN5**	0…10V input for **A.P. ramp B nozzle power flow transducer**
12	**+V**	Output +22 Vdc, 40 mA not stabilized for transducer power supply, protected against short circuit

3.3.1.1. Analog signal and transducer connections

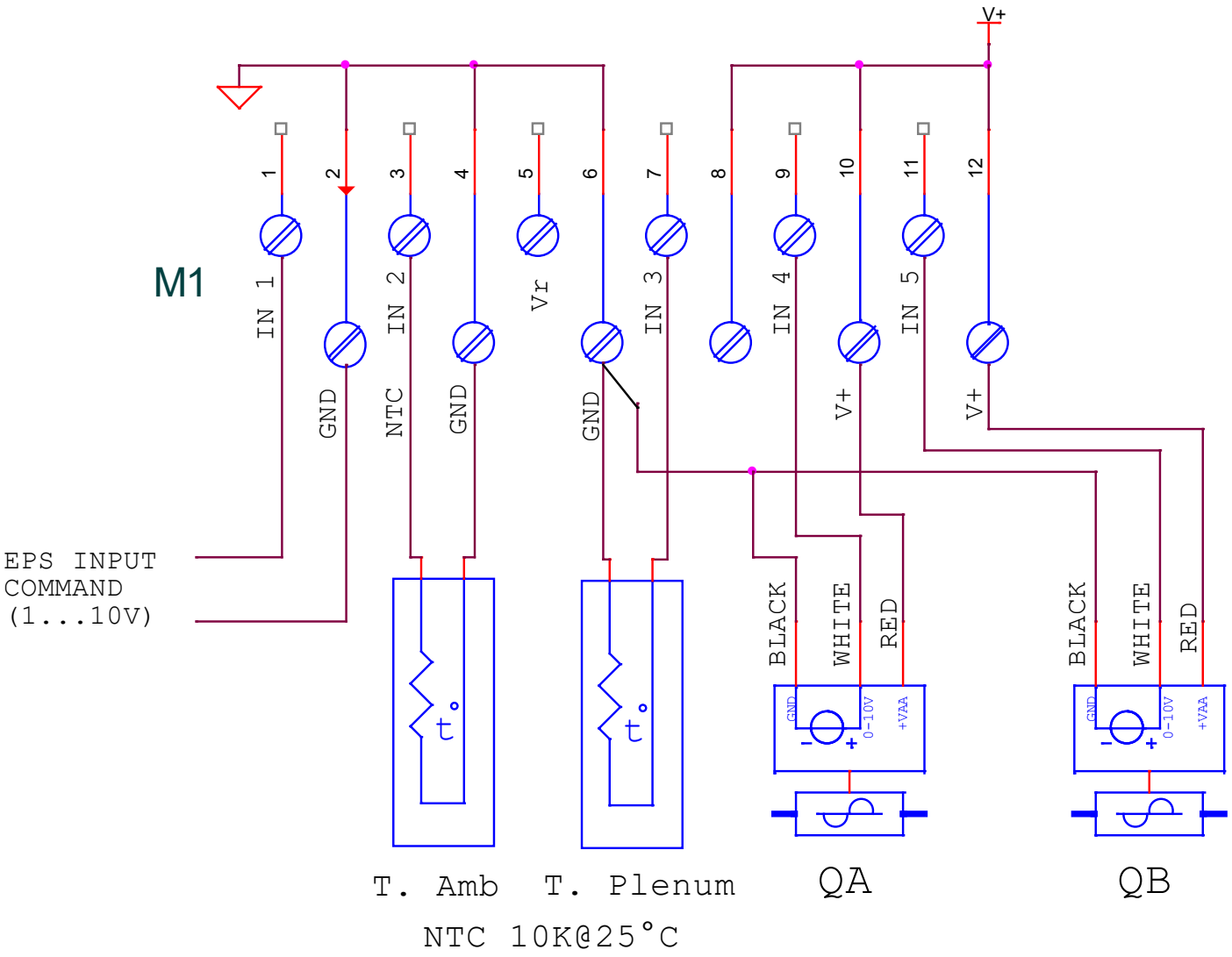

N.B. QA = QB = BELIMO FLOW SENSOR **22PF-1UX**

3.3.1.2. Connection with RGM or ECP: 1-10 Vdc analog signal command

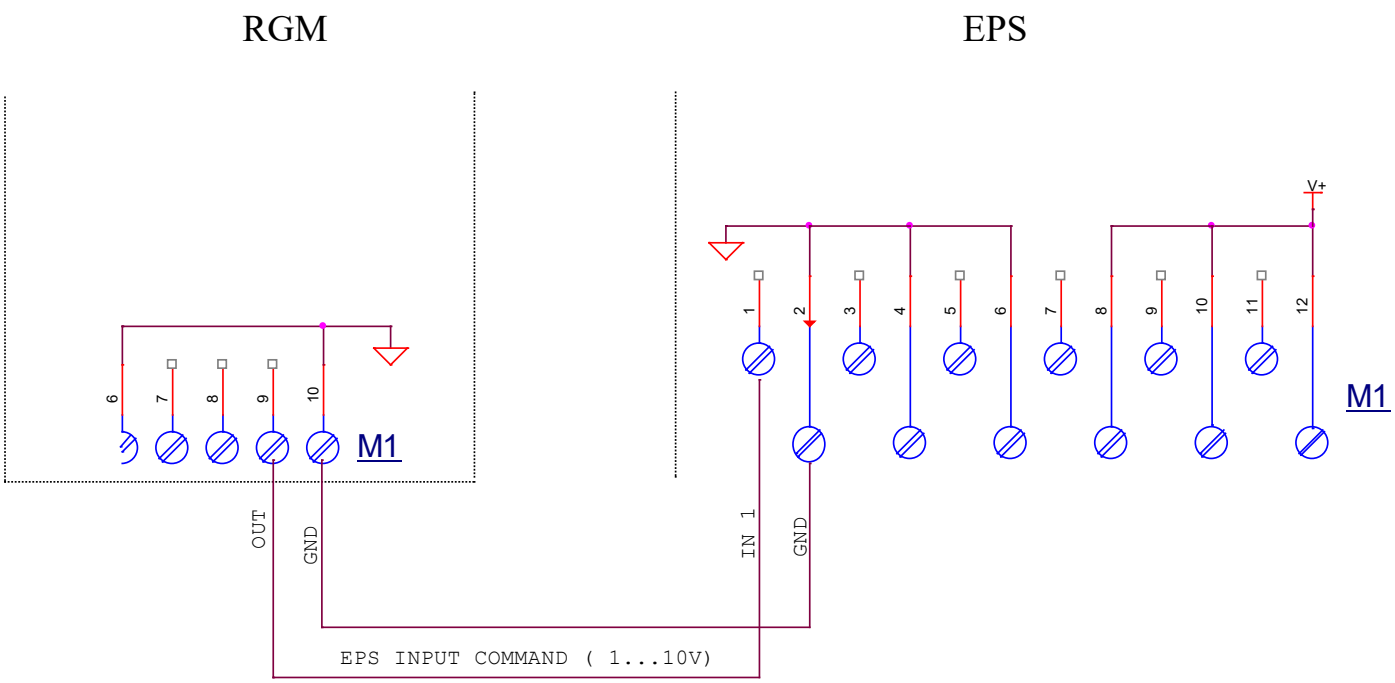

3.3.1.3. Connection with ECM or DSV: 1-10 Vdc analog signal command

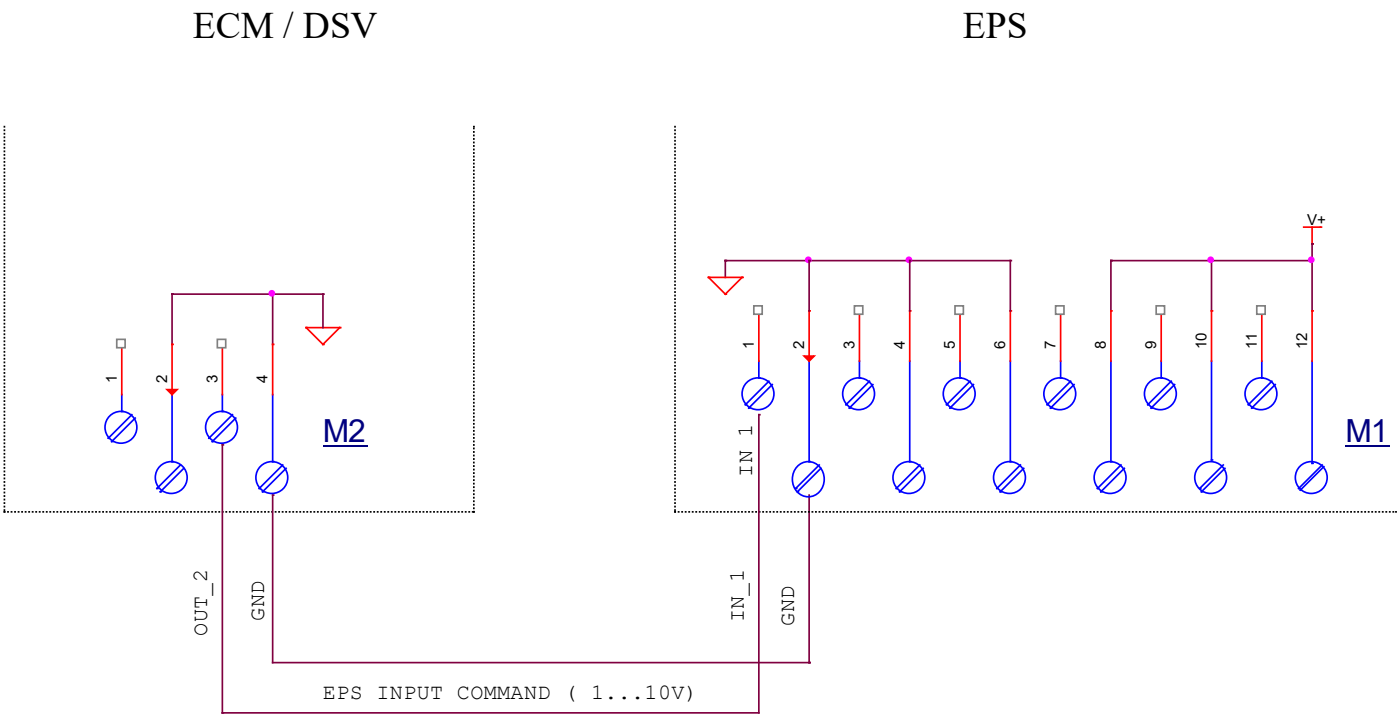

3.3.2. M2 terminal board: ON / OFF logic inputs

Connect only power-free contacts.
Under no circumstances apply a voltage to these inputs

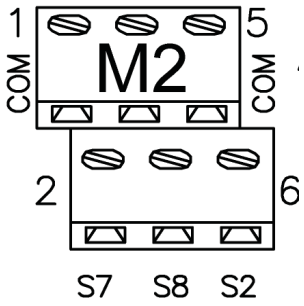

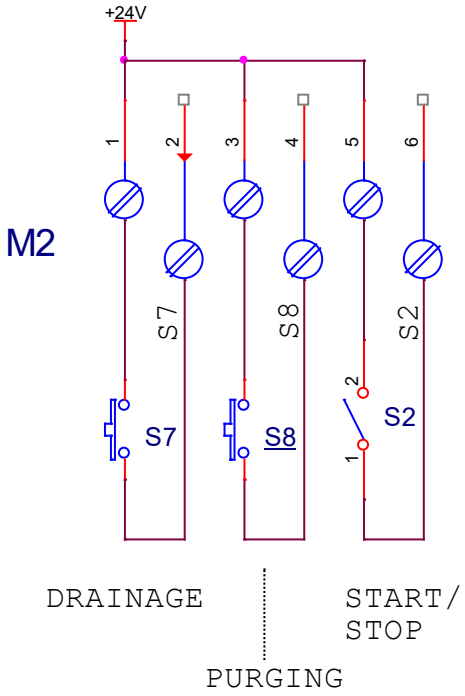

Mors M2		Description
1	**COM**	Common + 24 Vdc
2	**S7**	Drain command input, on closed
3	**COM**	Common + 24 Vdc
4	**S8**	Purge command input, on closed
5	**COM**	Common + 24 Vdc
6	**S2**	Start / Stop input, Closed, see para. 4.4

3.3.3. M3 terminal board: modulating motorized valve control outputs

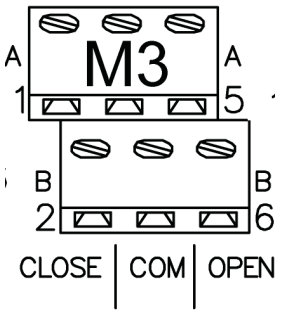

Terminal board M1		Description
1	**Close A**	CLOSE command output for motorized valve "A"
2	**Close B**	CLOSE command output for motorized valve "B"
3	**Common**	Common (0 Vdc)
4	**Common**	Common (0 Vdc)
5	**Open A**	OPEN command output for motorized valve "A"
6	**Open B**	OPEN command output for motorized valve "B"

The **M3** terminal board is intended for the connection of two “Open / Stop / Close” type modulating valves.
The command for each output is ON / OFF type, the outputs are static type protected against short circuit.

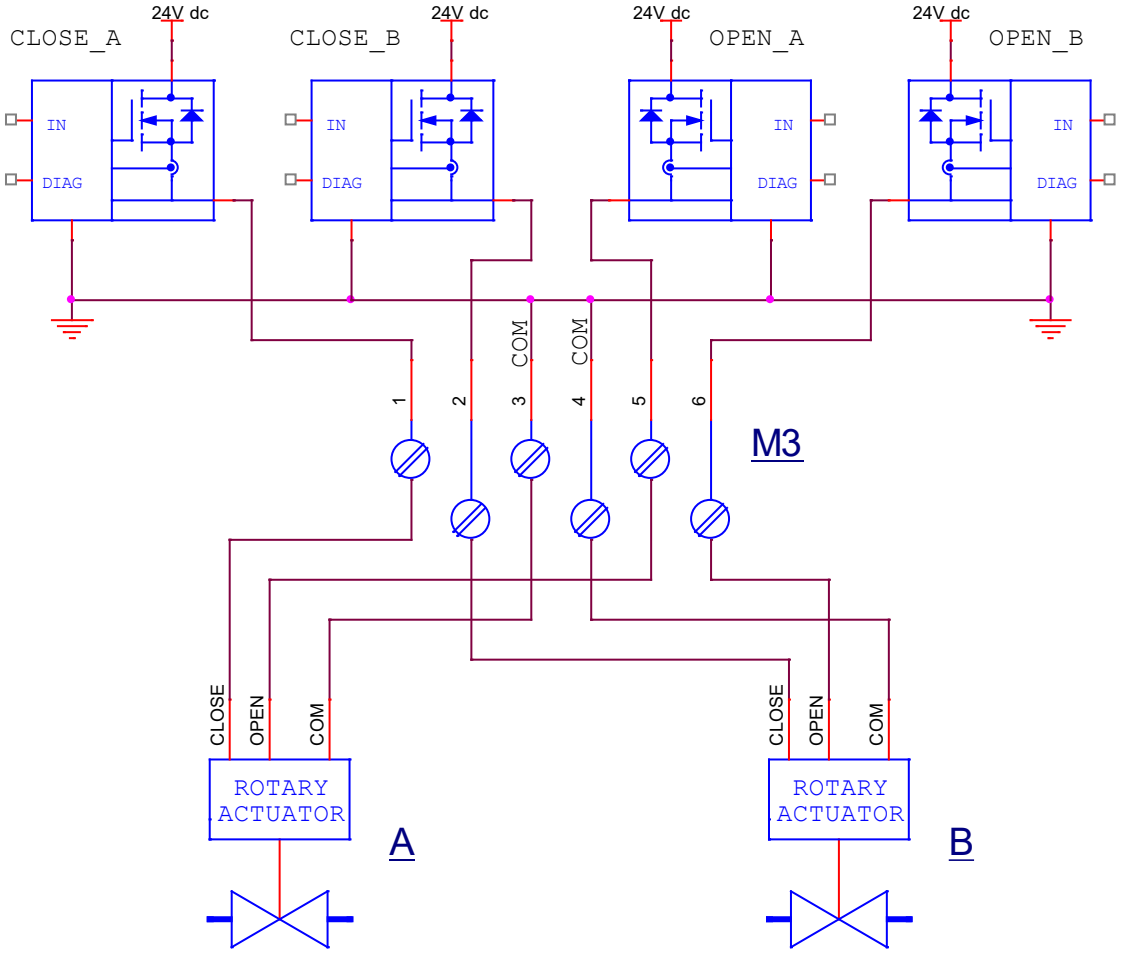

NOTE: A = B = BELIMO MODULATING ROTARY ACTUATOR LR24A-SR + BALL VALVE

3.3.4. M4 terminal board: Open / Closed solenoid valve control outputs

The **M4** terminal board is designed for connection to 3 (three) Open / Closed type solenoid valves, for system power, for draining and for controlling the pump and/or system power supply solenoid valve; use 4 (four) 16 A 250 Vac relays

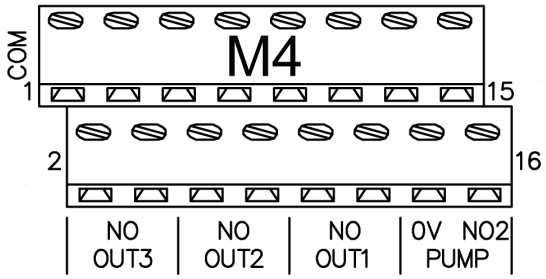

Terminal board M1			Description
1	**-**	**0 Vac**	Common 0 Vac
2	**RL3**	**Out3 NO**	NO contact NC supply solenoid valve control
3	**-**	**0 Vac**	
4	**RL3**	**Out3 NO**	
5	**-**	**0 Vac**	Common 0 Vac
6	**RL4**	**Out2 NO**	NO contact NC drain solenoid valve command
7	**-**	**0 Vac**	
8	**RL4**	**Out2 NO**	
9	**-**	**0 Vac**	Common 0 Vac
10	**RL5**	**Out1 NO**	NO contact NC system pipe drain solenoid valve control
11	**-**	**0 Vac**	
12	**RL5**	**Out1 NO**	
13	**-**	**24 Vac**	AC supply voltage output: 24 Vac
14	**-**	**0 Vac**	Common 0 Vac
15	**RL6**	**Pump NO1**	NO contact for system pump / solenoid valve supply control
16	**RL6**	**Pump NO2**	NO contact for system pump / solenoid valve supply control

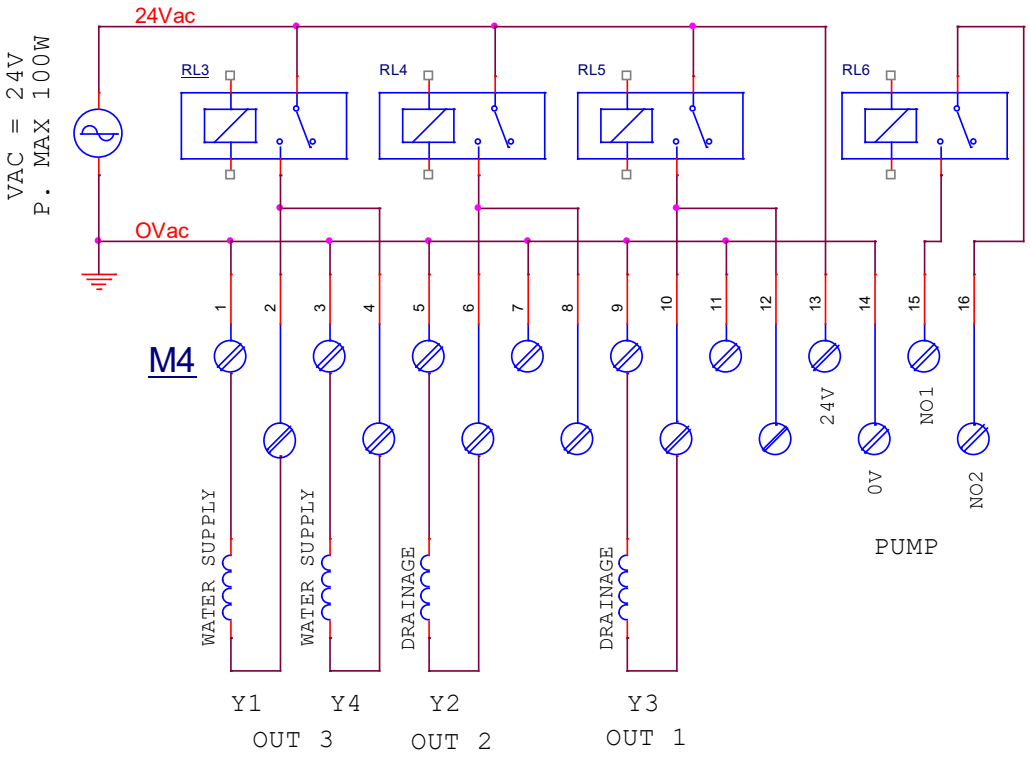

3.3.5. M5 TERMINAL BOARD: RL1 and RL2 service relays

- **RL1**: energized in the absence of device alarms in regular operation
- **RL2**: energized when the pump is running and one or more ramp power valves open, it is de-energized in "Total drain" or "Auto drain" mode

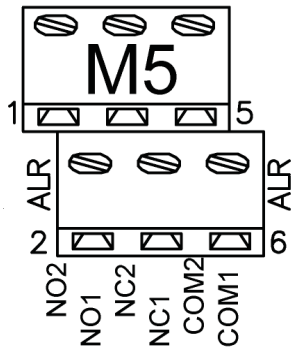

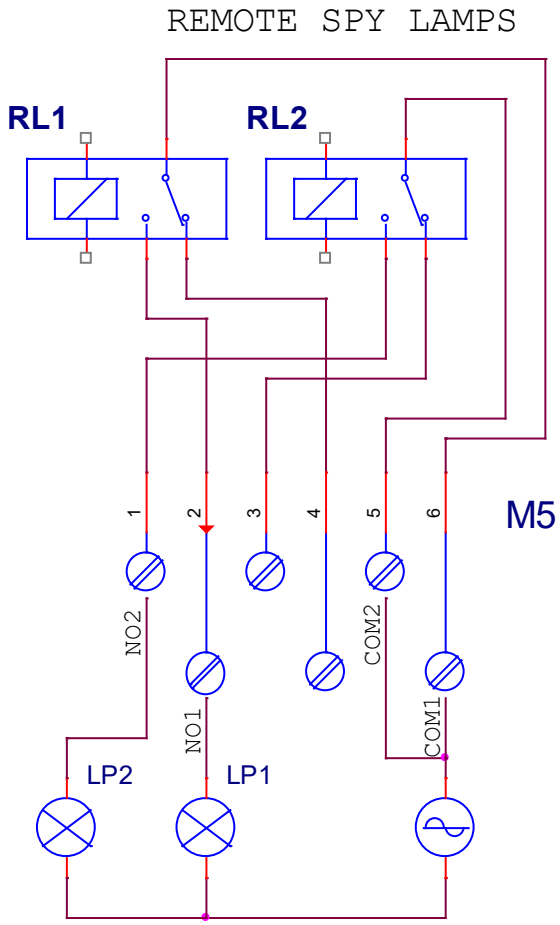

M5 terminal board		
No.	**Abbreviation**	**Description**
1	**NO2**	RL2 relay NO contact
2	**NO1**	RL1 relay NO contact
3	**NC2**	RL2 relay NC contact
4	**NC1**	RL1 relay NC contact
5	**COM2**	Common RL2 relay
6	**COM1**	Common RL1 relay

LP1 Lamp on with EPS powered and without alarms

LP2 Lamp on with water supply consent

3.3.6. PB1073C Module: for RS-485 Isolated Serial Line (ModBus)

The RS-485 MODBUS serial link (RTU) is present on the EPS controller board.
The two **M1** and **M2** terminal boards on the board (plug **PB1073C**), are used for the electrical connections of the RS-485 serial line, managed with the "Modbus RTU in SLAVE mode" protocol, for connection to the "**PC Host**".

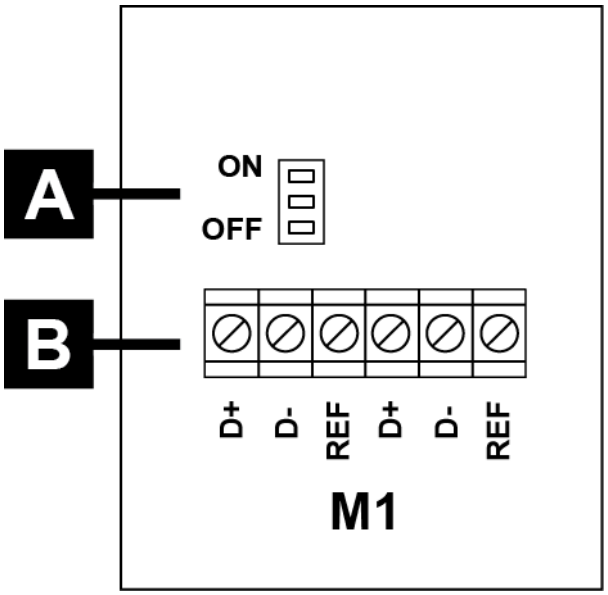

Part	Description
A	Serial Line termination jumper • **ON** (1-2): 120 Ω line termination on • **OFF** (2-3): 120 Ω line termination off
B	Modbus connections (*) • **D+**: RS485 straight (non-inverting) • **D-**: RS485 negative (inverting) • **REF**: isolated transceiver reference grounding

N.B. The **A** jumper must be set to **ON** at the end of the serial line connection

To connect the **RS-485** serial line, use an external cable specific for these applications such as an **ITC BELDEN 15S7D Serial Cable for LAN networks**. The cable length can be up to **1,000 m**

Specifications	Value
Conductor 1	CuSn 7x0.25 mm
Conductor 1 (resistance)	50 Ω/km
Conductor 2	CuSn 7x0.25 mm
Conductor 2 (resistance)	50 Ω/km
Insulation	PEE 2.35 mm
Color code	White/Orange Blue
Plate 1	AL/pet 100%
Sheath 1	CuSn 65%
Internal sheath	Oil-resistant gray flame-retardant PVC
Internal sheath (diameter)	7.6 ± 0.1 mm
External sheath	Black UV ray resistant PE
External sheath (diameter)	9.0 ± 0.1 mm
Characteristic impedance	125 ± 15 Ω
Mutual or coaxial cable capacitance	MUTUAL 36 pF/m
Propagation speed	78%
Shielding efficiency (100–900 MHz)	>85 dB
Drain wire	CuSn 7x0.20 mm

3.3.6.1. RS-485 Serial connection diagram

Connect the cable (braided and shielded + continuity conductor) of the data line (the Modbus network) to the terminals, as shown in the following diagram:

On the last interface, at the end of the line, turn the termination on (J1 = ON)

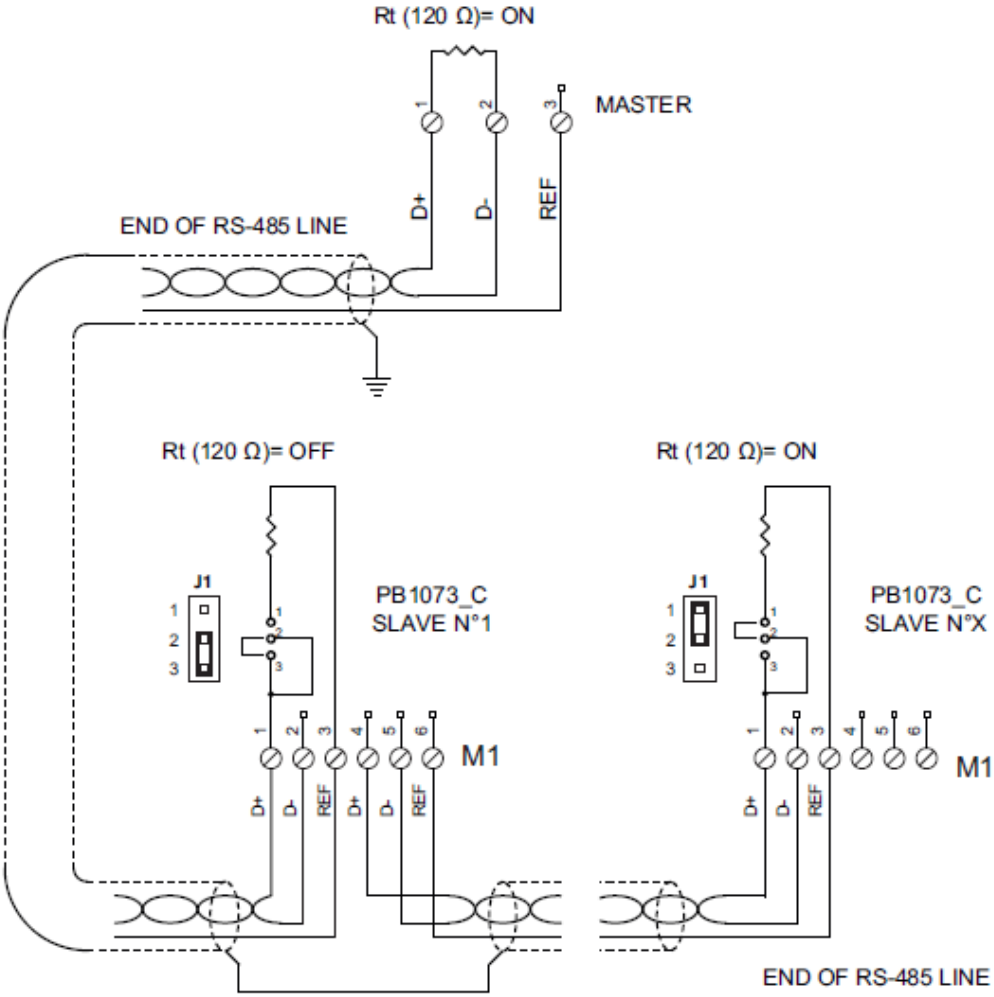

N.B.: It is absolutely essential to check the correct connection of the RS485 line;
All "**D+**", "**D-**" and "**REF**" terminals must be connected with the same cable.
The cable shield is to be grounded and connected to REF, only from the "**PC < - > RS485"** side.

- The data line cable (the Modbus network) must be connected from one controller to the next, starting from the Master unit to finish at the last device served; NO other wiring method is allowed.
- The connections must be made using cables suitable for outdoor environments, and must not exceed the maximum length of **1,000 m**.
- Make sure that you do not mix the Modbus network cable with the other system cables, especially those at the mains voltage.
- The ends of the line (Master and last device served) must be terminated with a **120 ohm** resistance.
  Activate the **120 ohm** termination on the **RS-485 < > PC Host** adapter; on the last line device, turn **J1 ON (2-1)**; on all the intermediate units, leave **J1 OFF (2-3)**.
- Ground the cable that connects all "**REF**" terminals only near the Master station so that all stations are at the same power, which is that of the **PC Host**.
- Ground the cable shield coming from the **RS-485 <> PC Host** adapter, only near the adapter itself; the shield must be connected only on the PC Host side, as shown in the diagram.
- The cable will be divided into segments, one for each section; connect the shield of the first section only from the **RS-485<>PC Host** adapter, and connect the shield of the second section only from the No.1 slave side, and so on.

4. Display and control devices

4.1. Display and buttons

The unit is equipped with a 4-row backlit LCD display, with 20 characters per row, and four function keys: “UP”, “DOWN”, “ESCAPE”, “ENTER”. The latter are used to carry out the parameter display and settings operations.

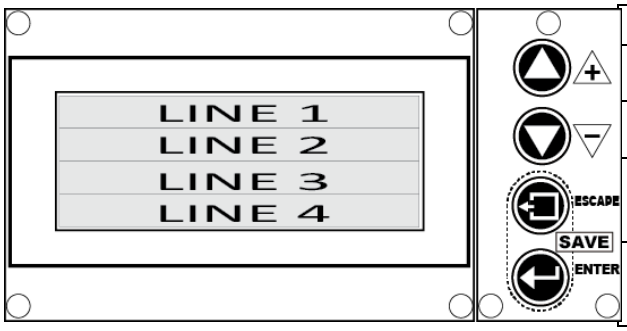

BUTTONS	Function descriptions
UP	Scroll the selected menu items upward Increase the selected value
DOWN	Scroll the selected menu items down Decrease the selected value
ESCAPE	Exit the current selection Mute alarms Pressed with ENTER: input menu / save changes
ENTER	Enter the menu or the selected parameter Temporarily save the modified value Pressed with ESCAPE: input menu / save changes

When switched on, the following appears for three seconds:

1	EPS Vr.1.0	Manufacturer's name, device model, X.Y software release
2	Water Flow	Device name
3	Digital Controller	Device name
4		

After a few seconds, if the device is in “WET READY” mode (Spray enabled), the following home page appears:

1	-- Wet Ready - 09:01	System status: see paragraph 4.2, RTC hours and minutes (*)
2	QR 0.0l/m Ta 33.0°C	Required rated water flow, in l / m; external temperature
3	QA 0.0l/m Tp -7.0°C	Effective ramp "A" water flow rate, in l / m; plenum temperature
4	QB 0.0l/m 0h 00m	Effective ramp "B" water flow rate, in l/m; value totaled by the hour meter

(*) Display row No.1 is reserved for display of the Real Time Clock **device status messages** (see paragraph 4.2).
N.B. The value totaled by the hour meter is increased every minute but only saved in EEPROM every fifteen minutes, to limit wear
N.B. To view the homepage, starting from any page of the display, press the "ESCAPE" key one or more times.

4.2. EPS status messages

They reflect the running EPS operating mode, presenting the following messages:

1	**------ Dry------- HH . MM**	Not enabled: insufficient external temperature, local clock time
1	**-- Wet Ready-- HH . MM**	Enabled: sufficient external temperature, local clock time
1	**- Wet Work - HH . MM**	Water supply, local clock time
1	**----- Stop ---- HH . MM**	Stop command, local clock time
1	**Man.Drain - HH . MM**	Manual ramp drain cycle on, local clock time
1	**Aut.Drain - HH . MM**	Automatic ramp drain cycle on, local clock time
1	**---Purging--- HH . MM**	Automatic adiabatic panel purge cycle on, local clock time
1	**--T. Ice-- HH . MM**	It concludes the EPS duty cycle and causes the system to discharge. The RL1 alarm relay is not de-energized

N.B. For alarm and warning messages, that are added to these**,** see chapter 7.

4.3. Display contrast adjustment

To change the LCD display contrast, press and hold the "ENTER" key down first and then the "UP (+)" key to increase, or "DOWN (-)" to decrease; on the display only line No. 3 is changed, which provides information on the current "dimming" level.

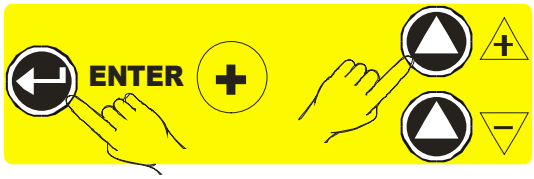

1	**---- XXXX ----**	System status
2		
3	**LCD DIMMER 235**	Current dimmer value: 0 to 255
4		

The value of the dimmer changes the contrast value on the LCD display, in steps of 5 units, from 0 to 255 in a circular manner.
For values over 190 the contrast is very low, these values must be avoided in order not to compromise the reading.

4.4. Dip switches settings: SW1

The device is equipped with No. 6 miniature switches (dip-switches) to activate special functions or modes of use, set in the basic software or customizable on request.

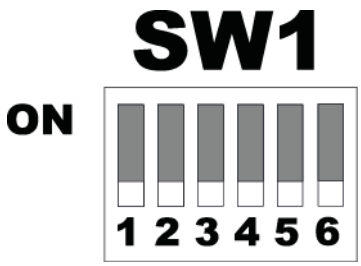

SW1		Meaning
1	ON	Allow access to the parameter change function
	OFF	Block access to the parameter change function
2	ON	Hysteresis switching temperature Dry <-> Wet 1 °C/1.8 °F
	OFF	Hysteresis switching temperature Dry <-> Wet 3 °C/5.5 °F
3	ON	STOP input active if S2 open
	OFF	STOP input active if S2 closed
4	ON	stable ModBus forcing
	OFF	momentary ModBus forcing, duration 30 seconds
5	Reserved	
6	ON	Display temperature in °F and pressure in psi
	OFF	Display temperature in °C and pressure in bar

4.5. Signal LEDs

The following signaling LEDs are included, indicating the activation of the functions described in the table below when on.

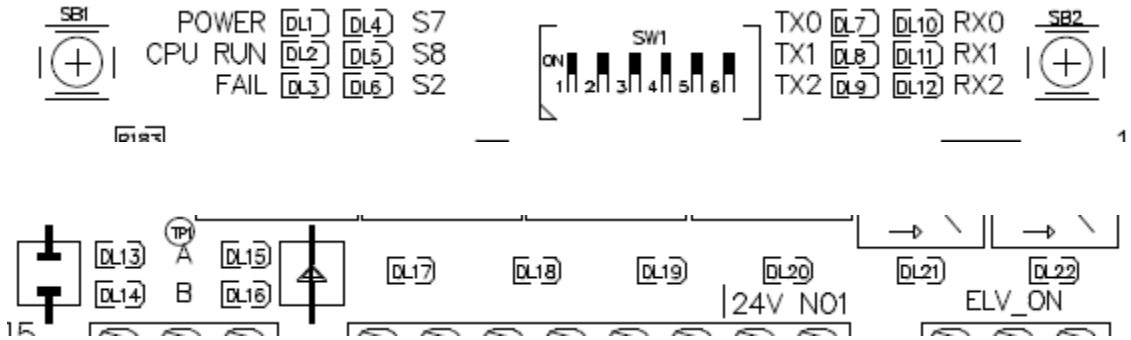

DL1	**Power**	**green**	ON = power on
DL2	**CPU Run**	**green**	ON with flashing 1 Hz = microcontroller in regular operation
			OFF / ON / irregular flashing = microcontroller failure
DL3	**Fail**	**red**	ON = FAIL: one or more alarms triggered, message on display, see chapter **7**
			OFF = OK: no alarm
DL4	**S7**	**yellow**	ON = drain manual control input on (manual drainage)
DL5	**S8**	**yellow**	ON = manual purging command for the panels
DL6	**S2**	**yellow**	ON = start consent
			OFF = forces the device into "Stand-By", closes nozzle supply valve active load
DL7	**Tx0**	**yellow**	ON = output data transmission on serial "0"
DL8	**Tx1**	**yellow**	ON = output data transmission on serial "1"
DL9	**Tx2**	**yellow**	ON = output data transmission on serial "2"
DL10	**Rx0**	**yellow**	ON = receiving input data on serial "0"
DL11	**Rx1**	**yellow**	ON = receiving input data on serial "1"
DL12	**Rx2**	**yellow**	ON = receiving input data on serial "2"
DL13	**A_Open**	**yellow**	ON = OPEN command for three-way modulating valve "A"
DL14	**B_Open**	**yellow**	ON = OPEN command for three-way modulating valve "B"
DL15	**A_Close**	**yellow**	ON = CLOSE command for three-way modulating valve "A"
DL16	**B_Close**	**yellow**	ON = CLOSE command for three-way modulating valve "B"
DL17	**Out_3**	**green**	ON = supply relay **RL3 ON**
DL18	**Out_2**	**green**	ON = drain relay **RL4 ON**
DL19	**Out_1**	**green**	ON = drain relay **RL5 ON** for external system
DL20	**Pump**	**green**	ON = supply pump relay **RL6 ON** for external system
DL21	**Alarm**	**green**	ON = relay **RL1 ON** no alarms, normal operation
			OFF = relay RL2 OFF one or more alarms triggered
DL22	**Elv_On**	**green**	ON = relay **RL2 ON** EPS running, one or more valves open
			OFF = relay RL1 OFF Spray not active

5. Operating Mode

From version 2.0 of the EPS firmware, the temperature and pressure values can be viewed with Imperial units of measure (°F e psi). Therefore, where the text indicates the unit of measure available in °C, it is considered to be °F, and where bar is indicated, it is considered to be psi. For the conversion values, use the following formulas: °F = 32 + (°C x 9/5), psi = bar x 14.5.

5.1. Start conditions

The EPS works if the following preliminary conditions are met, listed in descending order of priority.
The quantities referred to below, and the methods for their reading, are described in chapter 6.

1. **Start / Stop command (S2)**: this is a contact connected between terminals 5 and 6 of terminal board M2 (see paragraph 3.3.2 and paragraph 4.4)
2. If the status is **STOP:** EPS is not running, the "**--- Stop ---**" message appears on the first row of the display
3. If it is in the **START** state: EPS is enabled to run, one of the messages described in para 4.2 appears on the first row of the display.
4. **External temperature (Ta)** measured by the NTC probe connected to input IN2 (see paragraph 3.3.1).
   - If **Ta < TDry**: EPS is not running, and the "**--- Dry---**" message appears on the first row of the display
   - If **Ta > TDry+Hyst** and **Ta > Ice +2 °C (35,6 °F)**, EPS is enabled, the "**-Wet Ready-**" or "**-Wet Work-**" message appears on the first row of the display according to the conditions described below**.**

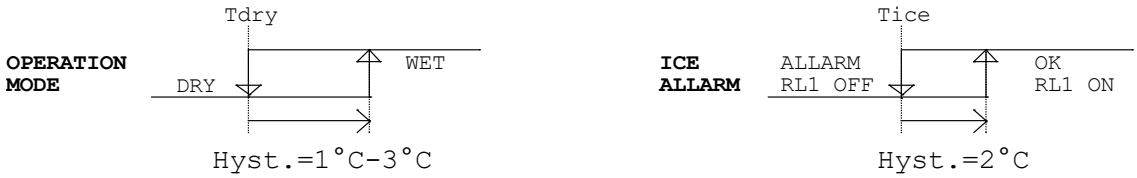

If both of the previous conditions are met, EPS behavior depends on the 1-10 Vdc command value received at the **IN** input (see para. 3.3.1) proportional to the fan speed control, coming from the controller that controls the fans.

5.2. Water supply in "Energy & Water Saving" mode

Control that minimizes both energy and water consumption; it compares the 1-10 Vdc analog signal at IN1 input with **VQmax**, **VQmin, VQstop**, **VQdrain** thresholds and controls the modulating and solenoid valves as per the following graph.

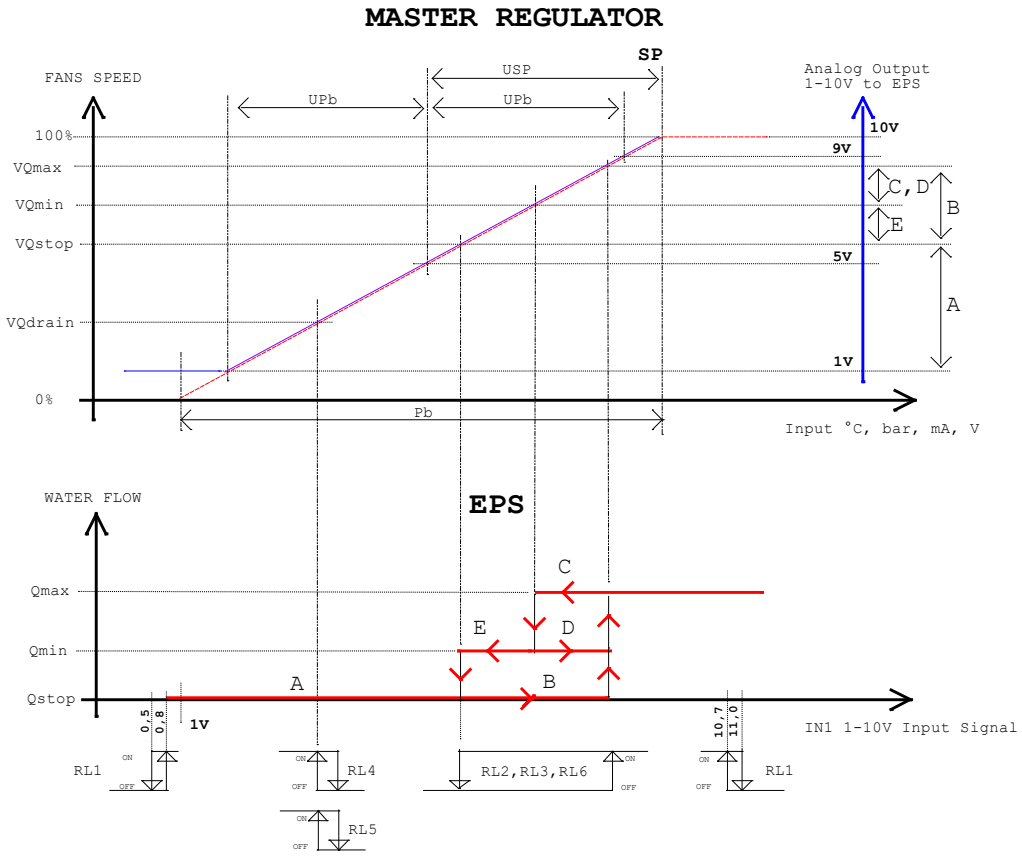

The fan speed moves freely from 0 to 100%, and consequently the 1-10V signal at input IN1

Water is supplied to the A.P.s as follows, see chart above:

- **A.** Fan speed starts at zero, if fan speed remains under **VQmax**, no supply to A.P.s.
- **B.** Fan speed increases and exceeds **VQmax** switching to “C”.
- **C.** A.P.s are powered with value **Qmax**, fan speed adjusts to the new condition, minimizing energy consumption. If the speed decreases, the quantity supplied remains **Qmax** until it drops below **VQmin**; switching to “D” or “E”, the A.P.s are supplied with the **Qmin** value minimizing water consumption.
- **D.** If the speed increases, the quantity supplied remains **Qmin** until it exceeds **VQmax**, switching to “C” and the cycle repeats.
- **E.** If the speed decreases again, the quantity supplied remains **Qmin** until it drops below **VQstop**; there is a switch to “A” or "B" and the cycle repeats**.**

B->A If the fan speed drops and remains under the **VQdrain** threshold, the "DDrain system inactivity time = Drain Wait Time” starts, default value 120 minutes. When it expires, the water contained in the system is drained.

A->B If the fan speed rises above the **VQdrain** threshold and the time has not expired, the timer is canceled along with the drain.

IN1 (Vdc)	Display			RL1	RL2	RL3	RL4	RL5	RL6
	Status Message (*)	SP (l/m)	Qdx Qsx (l/m)	Alarm	EPS On	Water Supply	Drain	Drain Aux	Pump
IN1 < 0.4V	IN1 Command Under	0	0	-	-	-	-	-	-
0.5 V < IN1 < VQmax	Wet Ready	0	0	ON	-	-	-	-	-
VQmax < IN1	Wet Work	Qmax	Qmax	ON	ON	ON	-	-	ON
11.0 V < IN1	IN1 Command Over	Qmax	Qmax	-	ON	ON	-	-	ON
VQmax < IN1	Wet Work	Qmax	Qmax	ON	ON	ON	-	-	ON
VQmin<IN1<VQmax	Wet Work	Qmax	Qmax	ON	ON	ON	-	-	ON
VQstop<IN1<VQmin	Wet Work	Qmin	Qmin	ON	ON	ON	-	-	ON
IN1< VQstop	Wet Ready	0	0	ON	-	-	-	-	-
0.5V <IN1< VQdrain	Aut. Drainage (**)	0	0	ON	-	-	ON	ON	-
0.5V <IN1< VQdrain	Wet Ready	0	0	ON	-	-	-	-	-
IN1 < 0.5V	IN1 Command Under	0	0	-	-	-	-	-	-

- = OFF

(*) If the flow rate of the water supplied is stably insufficient or excessive: QA and/or QB < -25% QR > +25% QR: the “**W. Flow Error**” alarm message appears on the first row of the display (for alarms see Chapter 8).

(**) Timed drain command; if **VQdrain< IN1** before the end of the drain time, the operation is canceled and the timer is reset.

5.3. Water supply in "Energy Saving" mode

Function that minimizes fan energy consumption; this compares the 1-10 Vdc analog signal at the IN1 input with the **VQmax**, **VQstop**, **VQdrain** thresholds and controls the modulating and solenoid valves as per the following graph
It is activated by setting **VQmin = VQmax**

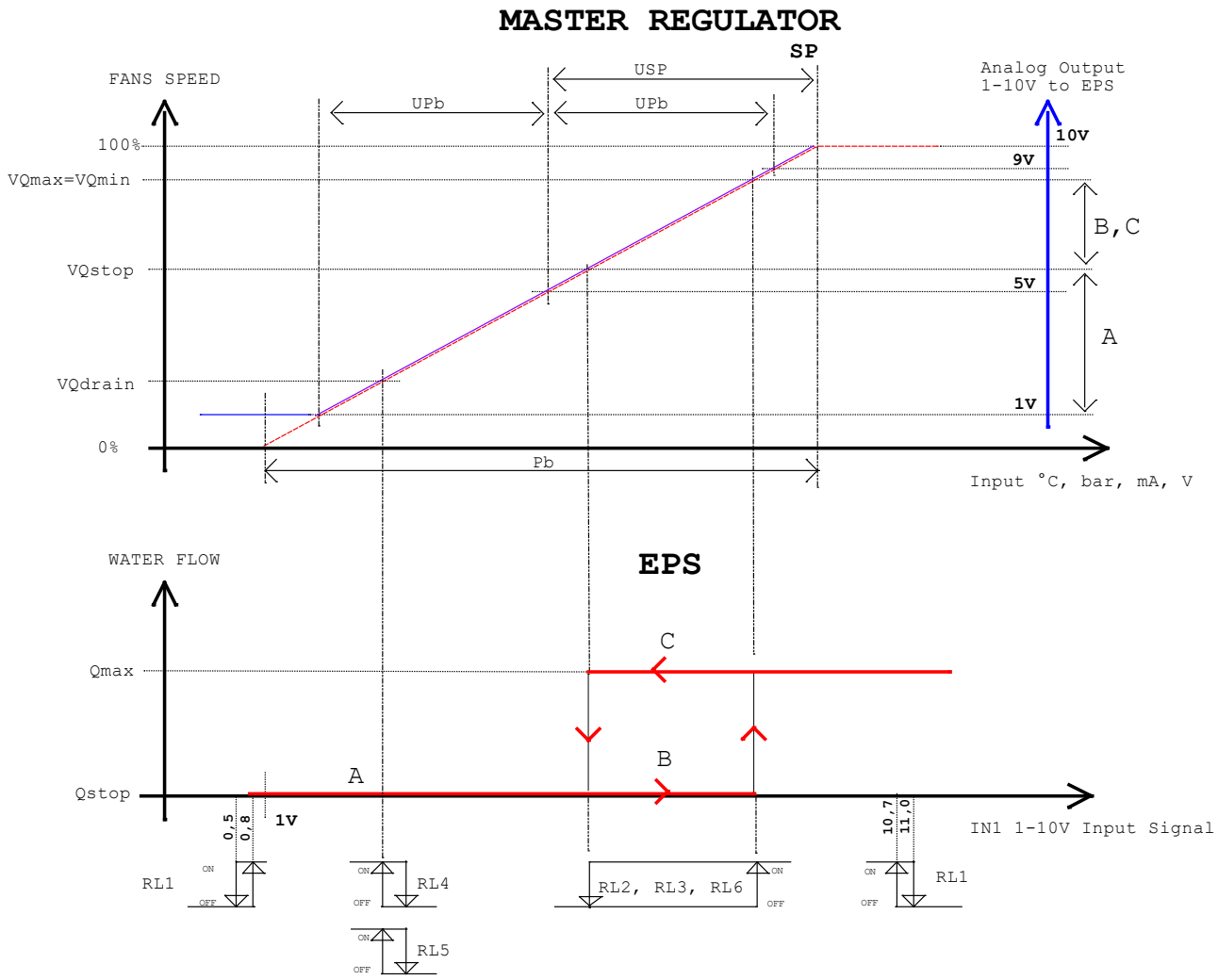

The fan speed moves freely from 0 to 100%, and consequently the 1-10V signal at input IN1
Water is supplied to the A.P.s as follows, see chart above:

- **A.** Fan speed starts at zero, if fan speed remains under **VQmax**, no supply to A.P.s.
- **B.** Fan speed increases and exceeds **VQmax** switching to “C”.
- **C.** A.P.s are supplied with value **Qmax**, fan speed adjusts to the new condition, minimizing energy consumption. If the speed decreases, the quantity supplied remains **Qmax** until the speed drops below **VQstop**; there is a switch to “A” or “B” and the cycle repeats.

B->A If fan speed drops and remains under threshold **VQdrain** the "DDrain system inactivity time = Drain Wait Time " starts, default value 120 min. When it expires, the water contained in the system is drained.
A->B If fan speed rises over the **VQdrain** threshold and the time has not expired, the timer is canceled along with the drain

IN1 (Vdc)	Display			RL1	RL2	RL3	RL4	RL5	RL6
	Status Message (*)	SP (l/m)	Qdx Qsx (l/m)	Alarm	EPS On	Water Supply	Drain	Drain Aux	Pump
IN1 < 0.4V	IN1 Command Under	0	0	-	-	-	-	-	-
0.4 V < IN1 < VQmax	Wet Ready	0	0	ON	-	-	-	-	-
VQmax < IN1	Wet Work	Qmax	Qmax	ON	ON	ON	-	-	ON
11.0 < IN1	IN1 Command Over	Qmax	Qmax	-	ON	ON	-	-	ON
VQmax < IN1	Wet Work	Qmax	Qmax	ON	ON	ON	-	-	ON
VQstop<IN1<VQmax	Wet Work	Qmax	Qmax	ON	ON	ON	-	-	ON
IN1< VQstop	Wet Ready	0	0	ON	-	-	-	-	-
0.4V <IN1< VQdrain	Aut. Drainage (**)	0	0	ON	-	-	ON	ON	-
0.4V <IN1< VQdrain	Wet Ready	0	0	ON	-	-	-	-	-
IN1 < 0.5V	IN1 Command Under	0	0	-	-	-	-	-	-

- = OFF

(*) If the flow rate of the water supplied is stably insufficient or excessive: QA and/or QB < -25% QR > +25% QR the "**W. Flow Error**" alarm message appears on the first row of the display (for alarms see Chapter 8).

(**) Timed drain command; if **VQdrain < IN1** before the end of the drain time, the operation is canceled and the timer is reset.

5.4. Drive Master Device Settings

The EPS must be driven by one of the following devices suitable for controlling fans: ECM for fans with EC motor (driven both in ModBus and in 0-10V), RGM to drive three-phase AC motors with phase cut and DSV to drive three-phase AC stepper motors.

ECM

Use the OUT1 analog output (M2, terminals 1 and 2) 0-10V command signal for the fans.
The output can be modified with parameter **C7** (default "output SLAVE 0-10V"), see paragraph 10.2.3 on page 82 of the ECM manual.
Use the OUT2 analog output (M2, terminals 3 and 4) 1-10V command signal for the Water Spray unit.
The output can be modified with parameter C8 (default "output SPRAY 1-10V"), see paragraph 10.2.3 on page 82 of the ECM manual.
For the connections, see paragraph 6.6 on page 34 of the ECM manual.
Set the values of the USP and UPb parameters on the ECM according to the following table, depending on the input configuration used, see paragraph 10.1 on page 71 of the ECM manual.

ECP

Use the OUT analog output (M1, terminals 9 and 10) 1-10V command signal for the Water Spray unit.
The output can be modified with parameter **C7** (default=1)**,** see paragraph 8.9 on page 54 of the manual.
For the connections, see paragraph 6.5 on page 27 of the manual.
Set the values of the USP and UPb parameters on the RGM according to the following table, depending on the input configuration used, see paragraph 8.2 on page 36 of the manual.

RGM

Use the OUT analog output (M1, terminals 9 and 10) 1-10V command signal for the Water Spray unit.
The output can be modified with parameter **C7** (default=1)**,** see paragraph 8.9 on page 62 of the manual.
For the connections, see paragraph 6.5 on page 28 of the manual.
Set the values of the USP and UPb parameters on the RGM according to the following table, depending on the input configuration used, see paragraph 8.2 on page 44 of the manual.

DSV

Use the OUT2 analog output (M2, terminals 3 and 4) 1-10V command signal for the Water Spray unit.
The output can be modified using the C8 parameter (default "output SPRAY 1-10V"), see paragraph 10.2.3 on page 83 of the DSV manual.
For the connections, see paragraph 6.6 on page 34 of the DSV manual.
Set the values of the USP and UPb parameters on the DSV according to the following table, depending on the input configuration used, see paragraph 10.1 on page 71 of the DSV manual.

Config.	Default		ECM, DSV, RGM		U.M.
	SP	Pb	USP	UPb	
rtE-01	45/113	7.5/45.5	-3.75/22.25	3/37.4	°C/°F
rtE-02	45/113	7.5/45.5	-3.75/22.25	3/37.4	°C/°F
rPr420	14	2.6	-1.3	1.04	mA
rPr015	10.6/153.7	2.4/34.8	-1.2/17.4	0.96/13.9	bar/psi
rPr025	17/246.5	3.5/50.7	-1.75/-25.4	1.4/20.3	bar/psi
rPr030	17/246.5	3.5/50.7	-1.75/-25.4	1.4/20.3	bar/psi
rPr045	25/362.5	5.2/75.4	-2.6/-37.7	2.08/30.16	bar/psi

Config.	Default		ECM, DSV, RGM		U.M.
	SP	Pb	USP	UPb	
rUu-05	2.9	0.8	-0.4	0.32	Vdc
rPu030	17/246.5	3.5/50.7	-1.75/-25.4	1.4/20.3	Bar/psi
rUu010	6	1.6	-0.8	0.64	Vdc
rS020	-	20	10	8	mA
rS420	-	16	8	6.4	mA
rS010	-	10	5	4	Vdc

If the Pb values used on the master controller differ from the default values, the valuesto be set on the master controller for **USP** and **UPb** are given by the following formulas:

$$USP = - Pb/2$$

$$UPb = (Pb * 0,8) / 2$$

5.5. System Water Drain (drainage)

The device is designed for the following ramp and entire system drain methods.

N.B. In the "**Ice Temperature**" state, it is not possible to manually activate the "**Man. Drainage" (**water drain) and **Purging** (P.A. Washing**).**
In the "**Wet Work**" state (water dispensing), it is not possible to manually activate the "**Man. Drainage" (**water drain) to avoid waste.
In the state "**Man. Drain"** or **"Auto Drain**" (water drain), the **"STOP"** command (input **S2**) DOES NOT interrupt any operations running.

The drain cycle is as follows:

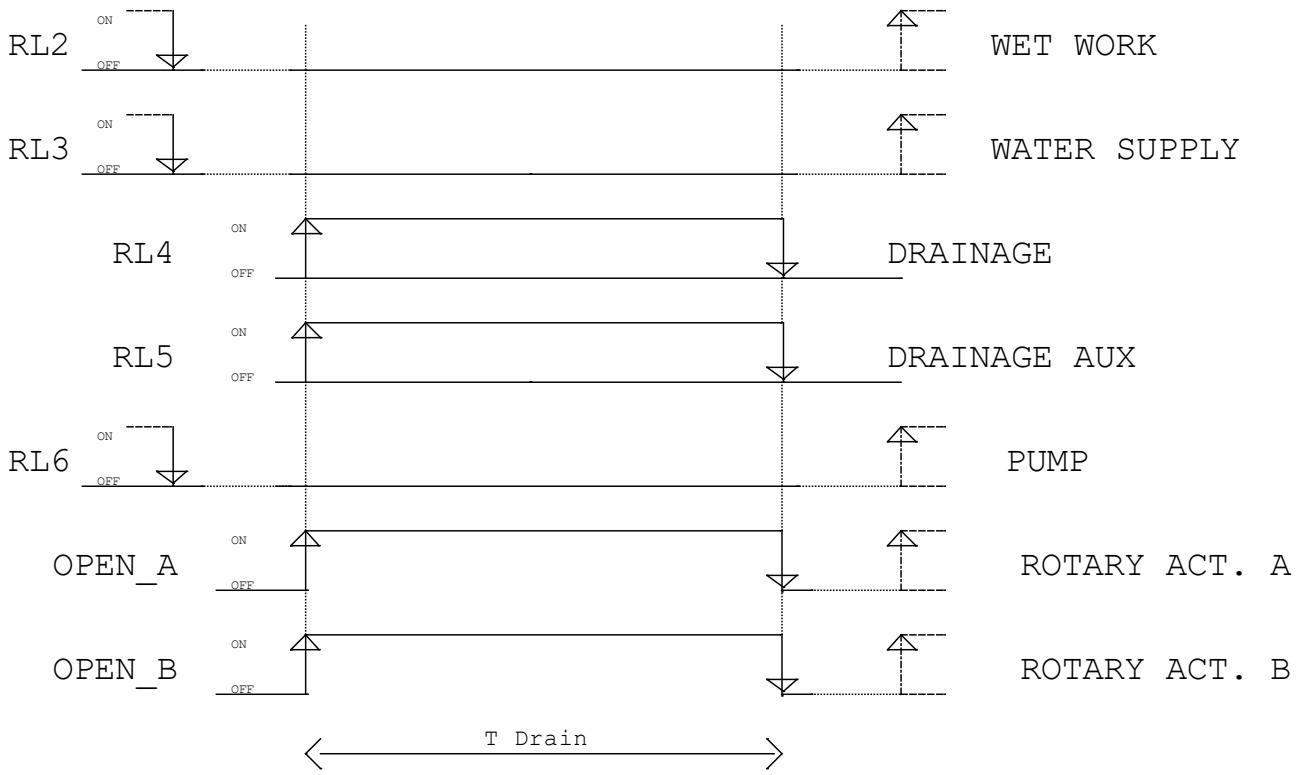

The duration is set by parameter **"T DRain = Drain ON Time"**. After this time interval, the EPS returns to the previous operating state.

5.5.1. Manual system drain ("Man. Drainage")

Fully drains water contained in the system, it is activated alternatively with one of the following methods:

1. Press and hold down the "+" and "**-**" keys simultaneously for at least two seconds (see paragraph 4.1)
2. Press the SB2 button on the board for at least two seconds (see paragraph 1.4.1, item 12)
3. Activate the remote control (S7) connected to M2 terminals 1 and 2 (see paragraph 3.3.2).

5.5.2. Auto drain: automatic system drain ("Aut. Drainage")

There are three automatic activation modes to run the "Drainage" cycle.

- When the fan speed drops steadily and remains below the threshold **VQdrain**, the "D Drain system inactivity timer = Drain Wait Time" activates; default value 120 minutes. When it expires, the water contained in the system is drained.
- With the frequency selected by the operator, using the **"Drain Rate"** and **"Drain Start"** parameters, see Chapter 6

5.6 Adiabatic Panel Purging

Allows the adiabatic panels (A.P.) to be purged, activating the water flow to the A.P. at the "**Qpurge**" flow rate for the "**Tpurge**" time. Activate the remote control (S8) connected to M2 terminals 3 and 4 (see paragraph 3.3.2).

6. Parameters

Device operations are controlled by a series of parameters whose value can be read via the display.
Some of these are read-only, others can be freely modified to adapt device operations to the user's needs. For how to view and modify the value, see the following pages.

From version 2.0 of the EPS firmware, the temperature and pressure values can be viewed with Imperial units of measure (°F e psi). Therefore, where the text indicates the unit of measure available in °C, it is considered to be °F, and where bar is indicated, it is considered to be psi. For the conversion values, use the following formulas: °F = 32 + (°C x 9.5), psi = bar x 14.5.

6.1. List of parameters visible on the display

Starting from the home page (see paragraph 3.1) press the "UP" or "DOWN" keys, the parameters listed below are shown on the display; the bold edging delimits the parameters collected on the same page of the display, in the three rows reserved for them.

Abbreviation	Display	Description
QA **QB** **Tamb** **QR** **Tplenum**	**.....** **hh.mm** **QA** **QB** **Ta** **QR** **Tp** **hhhh,mm**	**Home page**: main information for the user – Device status message – Current Real Time Clock time (hours, minutes) – Water flow supplied at ramp A (l / m) – Water flow supplied at ramp B (l / m) – External temperature (°C/°F) – Reference value of the water flow in l/m to be supplied by the two ramps A and B – Plenum temperature (°C/°F)) – Total hours and minutes of supply to the A.P.s
	Command Input	Value of the 1-10V command from which the Sp is derived in l/m
	Flowmeter A	Output value 0-10V of the ramp A flow rate meter
	Flowmeter B	Output value 0-10V of the ramp B flow rate meter
T Dry	Wet/Dry Temp.	Wet->Dry switch temperature threshold (Wet = Spray on)
T Ice	Ice Alarm T.	Ice alarm threshold temperature
-	-	
VQmax	Level VQmax	Command level percentage to start maximum flow rate
VQmin	Level VQmin	Command level percentage to start minimum flow rate
VQstop	Level VQstop	Command level percentage to start zero flow rate
VQdrain	Level VQdrain	A.P. end activity command level percentage to start automatic drain
T Drain	Drain ON Time	Valve opening time in manual or automatic cycle
D Drain	Drain Wait Time	Automatic drain valve start cycle delay (auto drain)
-	Drain Rate	Automatic drain cycle start frequency in days
-	Drain Start	Automatic drain cycle start time with system idle
-	-	-
Qmax	Flow Max	Maximum water flow, value referred to the **single** adiabatic panel
Qmin	Flow Min	Minimum water flow, value referred to the **single** adiabatic panel
Qprg	Flow Purge	Purge water flow, value referred to the **single** adiabatic panel
Pause	Pause	Idle time, maximum delay between two consecutive valve commands
Filt N	Command Filter	Filter on the 1-10 Vdc command signal, No. of samples used
TPurge	Purging Time	Purge duration with A.P. water at Qprg flow rate
C4	Alarms Page (**)	Alarms page
-	PI Regulator Page	Page with parameters shared by the two ramp A and B flow controllers
-	ModBus Page	Modbus parameter page
-	Real Time Clock Page	Real Time Clock page
TLogic	Board Temp. (°C/°F)	Real-time control board temperature in °C/°F
C3	Row Fan Number	No. of fans for each row on the machine
-	XXXXXX, YY l/m	Belimo flow transducer model, selection according to the number of fans, F.S. in l / m

(*) Alarm Flow = QA and/or QB < -25% QR > +25% QR

6.2. Unmodifiable measured quantities, minimum and maximum values

Abbreviation	Display	Value		Unit of measure
		min	Max	
QA	QA	0.0	99.9	l/m
QB	QB	0.0	99.9	l/m
Ta	Ta	-7.0/19.4 (*)	70.0/158	°C/°F
QR	QR	0.0	99.9	l/m
Tp	Tp	-7.0/19.4 (*)	70.0/158	°C/°F
-	hhhh,mm			hh,mm
IN1	Command Input	0.0	12.0	V
-	Flowmeter A	0.0	12.0	V
-	Flowmeter B	0.0	12.0	V
TLogic	Logic Board Temp. (°C)	-20.0	+90.0	°C
	Flow Transducer Type	FM015R-SZ, FM020R-SZ, FM025R-SZ		-

(*) Probe input not connected to the NTC transducer

6.3. Modifiable operating parameters, default values, minimum and maximum values

Abbreviation	Display		Value			Unit of measure
			Default	min	Max	
T Dry	Wet/Dry Temperature (Hysteresis 1 °C/33.8 °F - 3 °C/37.4 °F)		20/68	4.0/39.2	40.0/104	°C/°F
T Ice	Ice Alarm Temperature (Hysteresis 2 °C/35.6 °F)		8/46.4	2.0/35.6	12.0/53.6	°C/°F
VQmax	Level VQmax		90	15	100	%
VQmin	Level VQmin		70	15	100	%
VQstop	Level VQstp		50	15	100	%
VQdrain	Level VQdrain		20	15	100	%
T Drain	Drain ON Time		600	60	3600	s
D Drain	Drain Wait Time		120	0	240	m
-	Drain Rate		1	0	99	dd
-	Drain Start		22, 00	00.00	23.59	hh, mm
Qmax	Flow Max (*)		3	0.5	9.9	l/m
Qmin	Flow Min (*)		2	0.5	9.9	l/m
Qpurge	Flow Purge(*)		6	0.5	9.9	l/m
Pause	Pause		8.0	0.5	30.0	s
Filt N	Command Filter		16	1	20	No.
TPurge	Purging Time		5	0	60	m
-	Alarm In Com		Active	Bypass	Active	-
-	Alarm Ice Tem		Active	Bypass	Active	-
-	Alarm Flow		Active	Bypass	Active	-
P	Proportional constant	**22PF-1UC (DN15)**	-	0.1	25.2	l/m
		22PF-1UD (DN20)	-	0.1	46.8	l/m
		22PF-1UE (DN25)	-	0.1	82.8	l/m
I	Integral Constant		1	0	1000	-
Ti	Integration time		10	0	100	s
MBtype	ModBus Address		247	1……..247		-
MBrate	Baud rate		19200	4800, 9600, 19200, 38400		-
MBtype	Type		8E1	8N1, 8E1, 801		-
	Real Time Clock Page		-	hh,mm,ss dd/mm/yy		-
N	Row Fan Number		5	1	10	No.

(*) Value referred to the **single** adiabatic panel

6.4. Recall Default Configurations, Operation Mode Menu

Set the operating configuration corresponding to the intended use before starting the system!

The following procedure allows you to choose one of the 10 default configurations provided, which differ by the number of "Fan Row" fan copies used and by the model of the two flow transducers to be combined with the EPS.
N.B. This procedure is also useful for reloading the default values

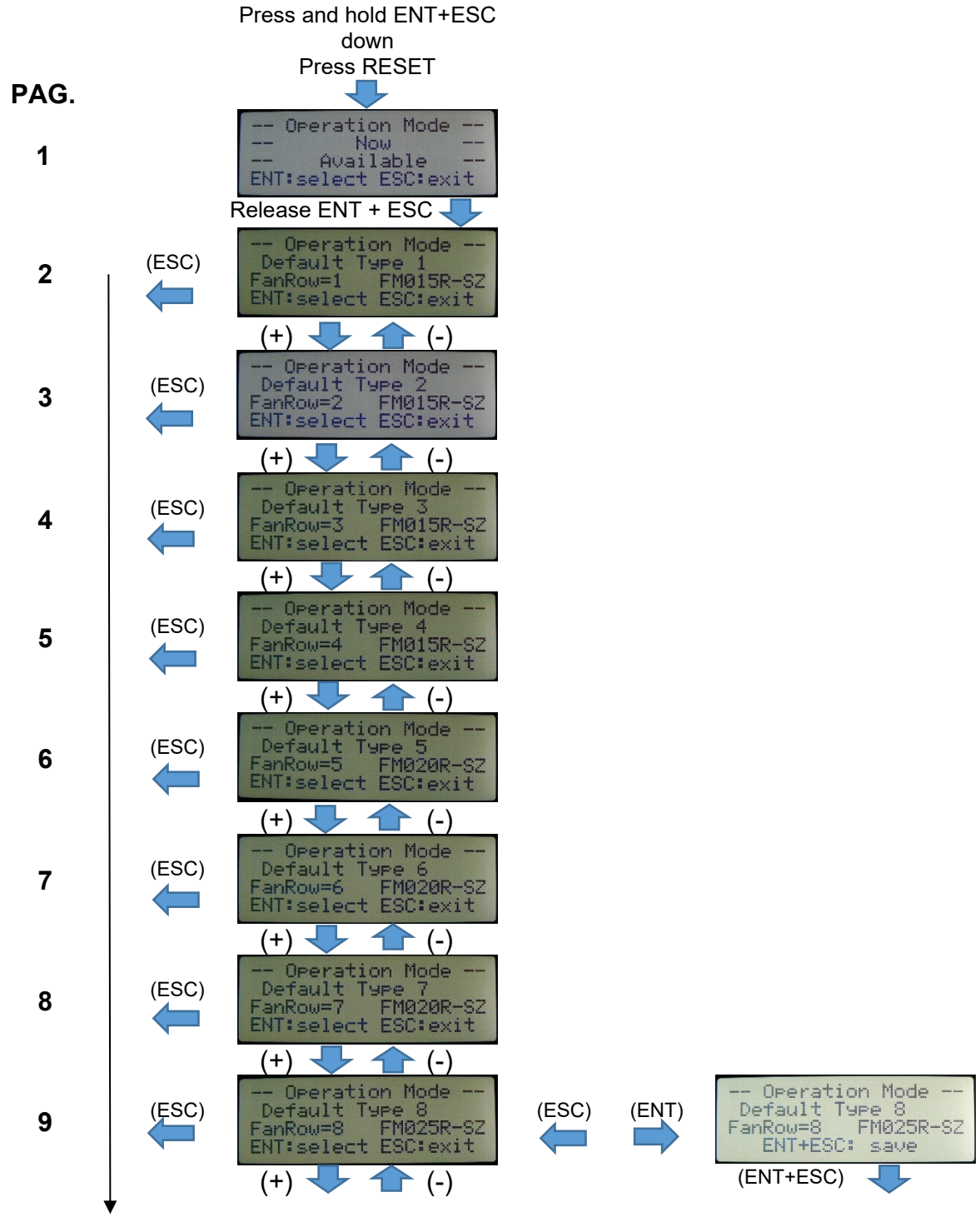

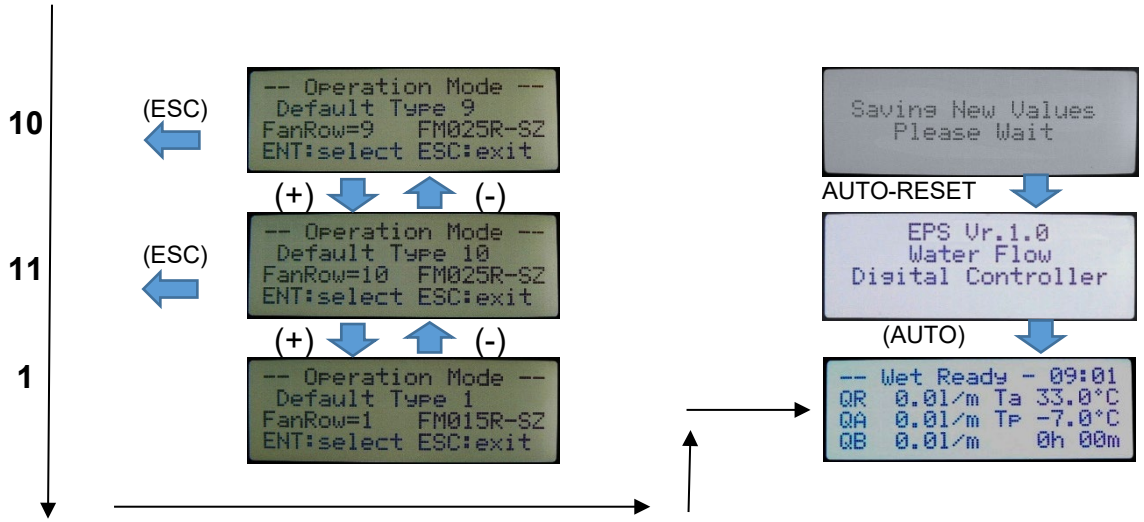

Changing the "Default" Configuration

A. Hold down the "**ENT**" and "**ESC**" keys, quickly press the **SB1 = "RESET"** key. Page 1 appears. Release the "**ENT**" and "**ESC**" keys. Page 2 appears

B. Scroll through pages **2** to **11** on the display with the "**UP**" and "**DOWN**" keys, with the number of "Fan Row" fan pairs growing from 1 to 10 to then return to 1.

C. Once the required configuration is identified, press "**ENTER**" and the "**ENT+ESC=save**" message appears on the fourth row of the display.

D. To exit and discard changes, press the **ESCAPE** key to go back one step.

E. To confirm the selection, simultaneously press "**ENT + ESC"**: the "**Saving new values, Please wait**" message appears on the display. The configuration selected is immediately used, **deleting the previous one**, along with all the changes that may have been made.

F. The controller enters regulation and the HOME page of the INFO menu appears on the display.

6.5. Display Parameters, Home & Info Menu, Edit Parameters Configuration Menu

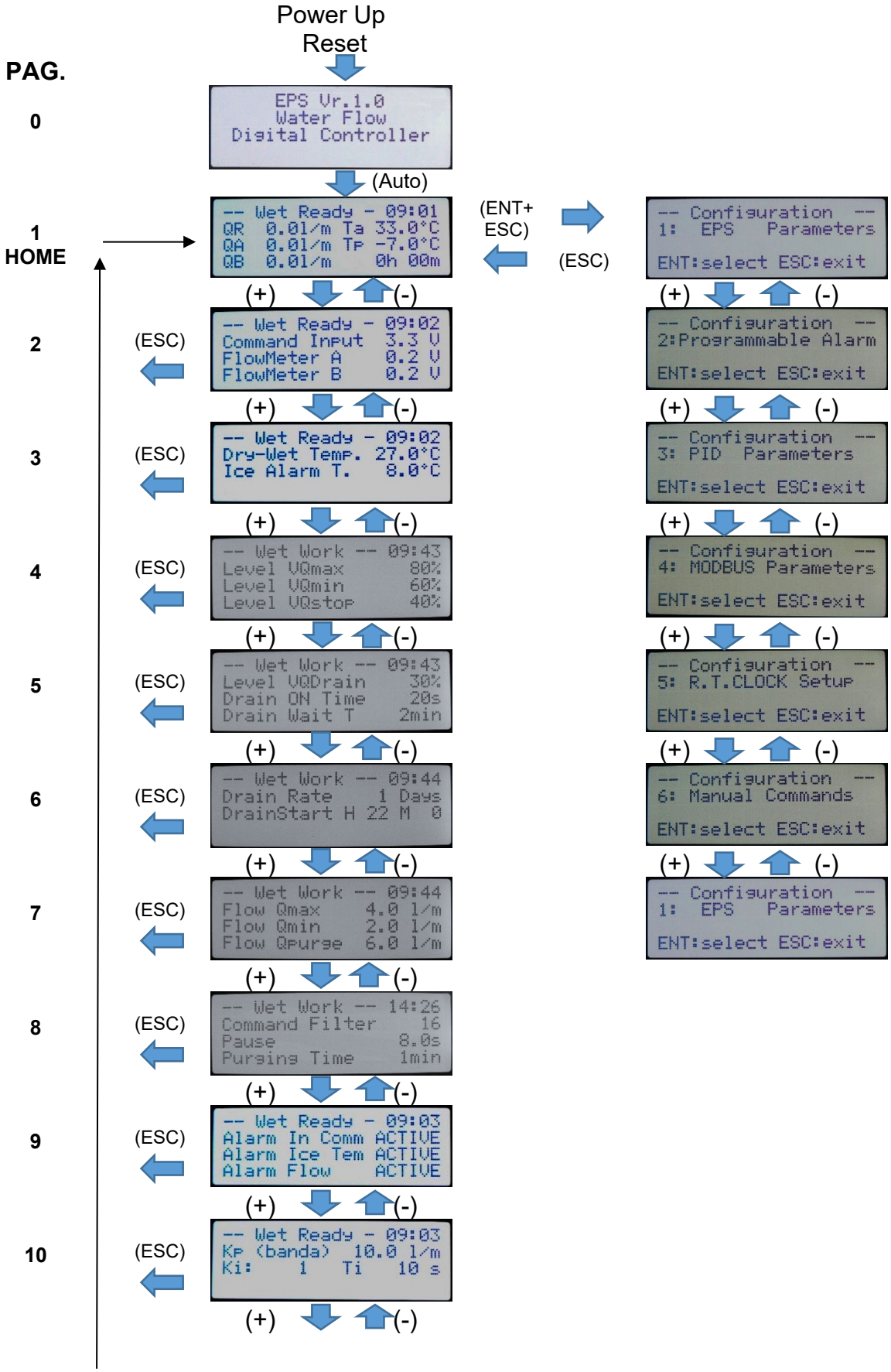

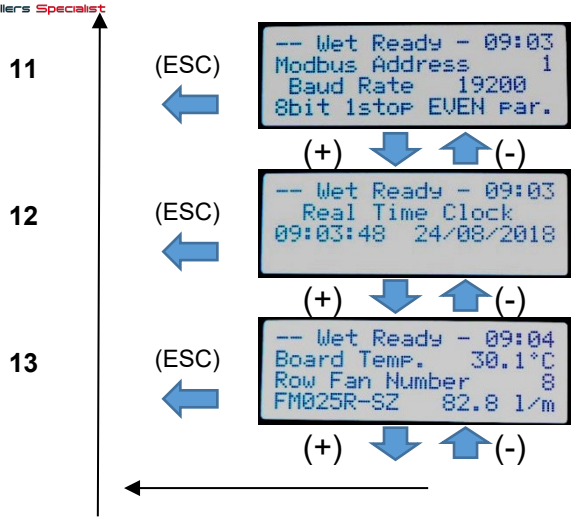

A. At start-up, or after reset, page 0 appears for a moment, and then automatically switches to page 1 "**HOME**" with the basic information on the EPS operating status, see Chapter 4 and Chapter 6.

B. Press the "+" or "-" keys to display the next or previous pages containing the values of the other parameters, Chapter 6.

C. Press the "ESC" key on any display page to return to HOME

D. To edit one or more parameters, press the "**ENT + ESC**" keys simultaneously. The "**1 – EPS Parameters**" page appears on the display: the first page in the **"Configuration"** menu. For further instructions, see the following paragraphs.

E. To select one of the sub-menus available, press the "+" or "-" keys.
Once the sub-menu has been identified, to access it, press the "**ENTER**" key.

F. Instead, to return "HOME", press "ESC".

6.5.1. “EPS Parameters”

This sub-menu allows you to read and edit EPS device operating parameters

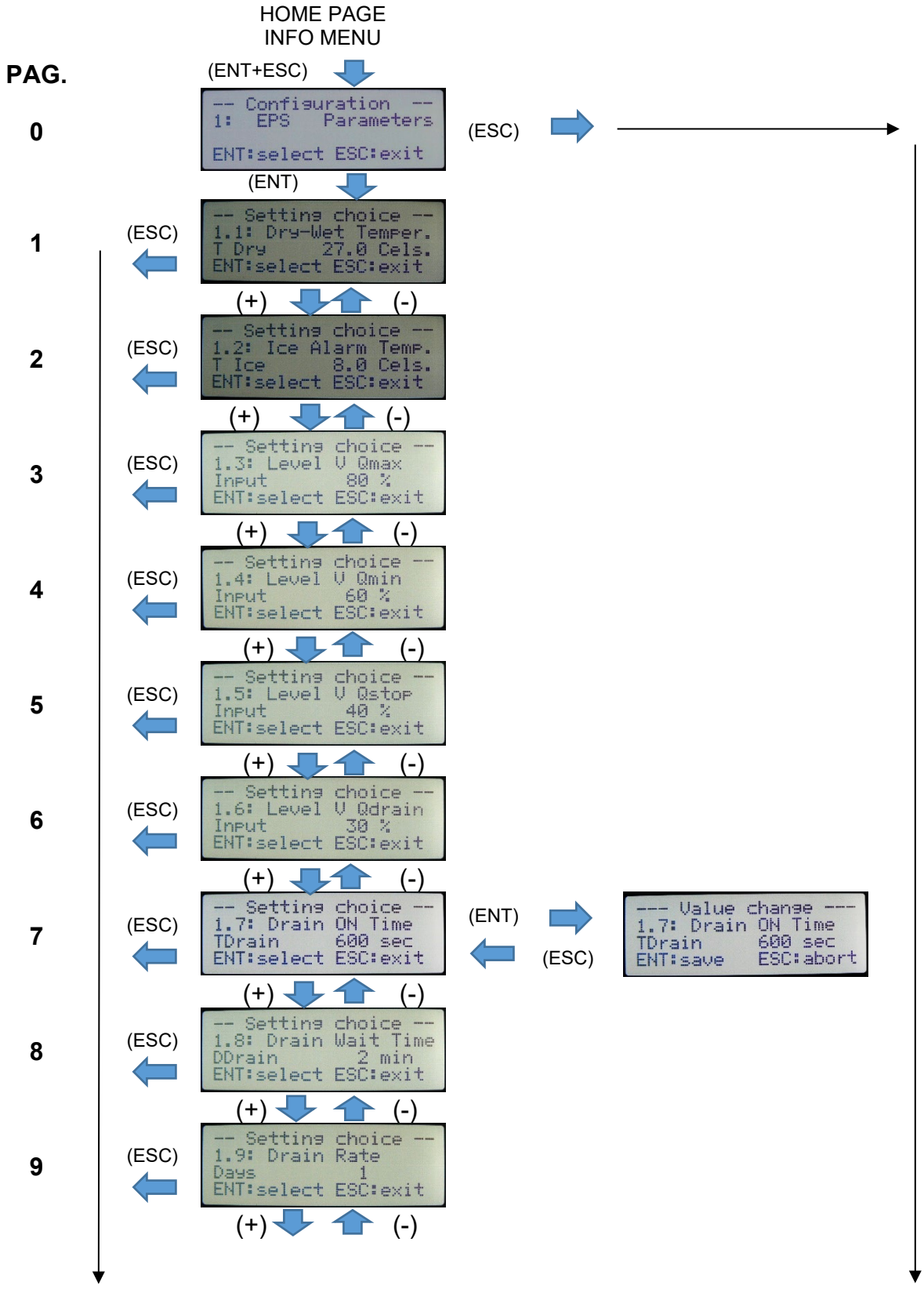

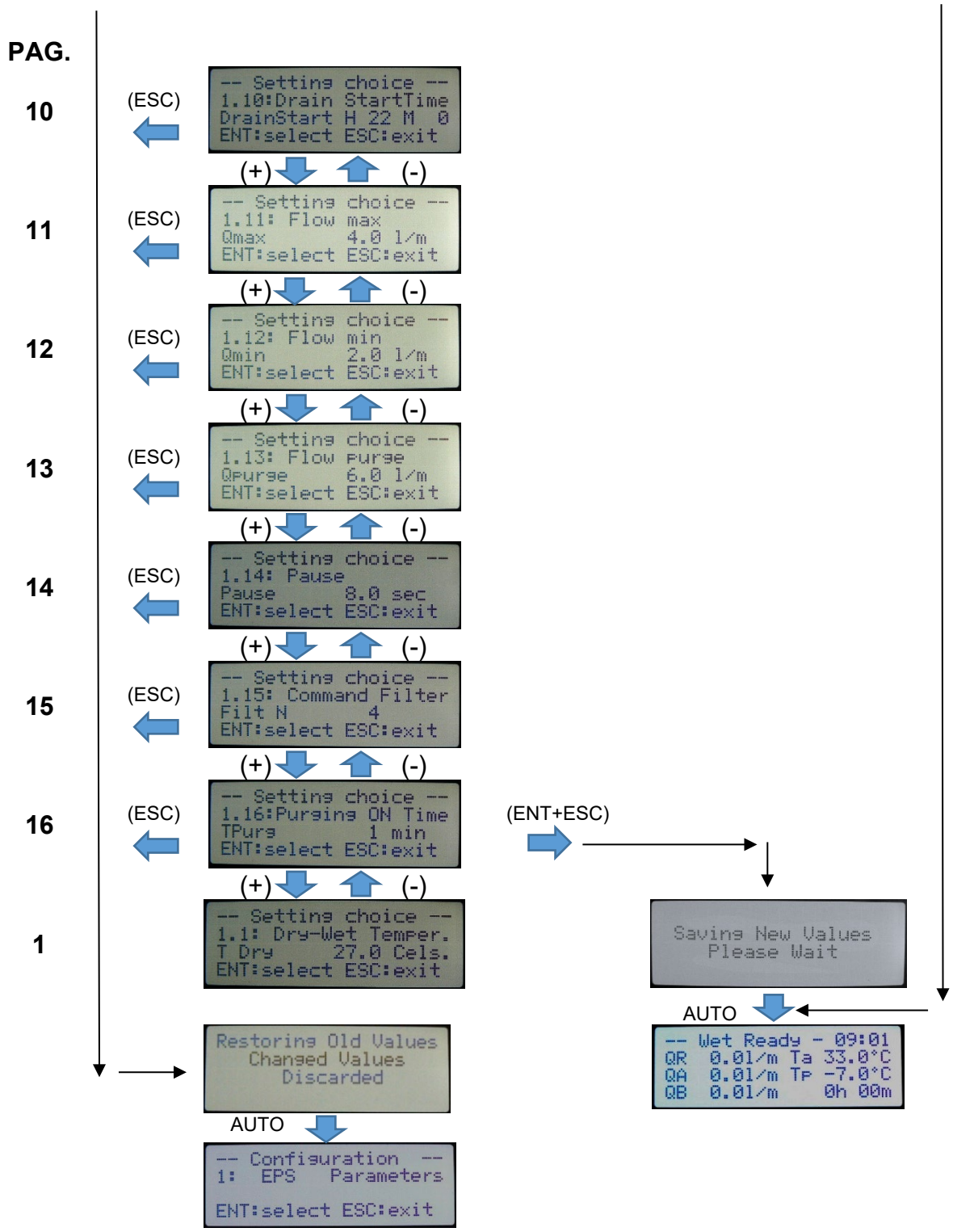
PAG.
10
11
12
13
14
15
16
1
(ESC)
(+)
(-)
-- Setting choice --
1.10:Drain StartTime
DrainStart H 22 M 0
ENT:select ESC:exit
-- Setting choice --
1.11: Flow max
Qmax 4.0 l/m
ENT:select ESC:exit
-- Setting choice --
1.12: Flow min
Qmin 2.0 l/m
ENT:select ESC:exit
-- Setting choice --
1.13: Flow purge
Qpurge 6.0 l/m
ENT:select ESC:exit
-- Setting choice --
1.14: Pause
Pause 8.0 sec
ENT:select ESC:exit
-- Setting choice --
1.15: Command Filter
Filt N 4
ENT:select ESC:exit
-- Setting choice --
1.16:Pursing ON Time
TPurg 1 min
ENT:select ESC:exit
-- Setting choice --
1.1: Dry-Wet Temper.
T Dry 27.0 Cels.
ENT:select ESC:exit
Restoring Old Values
Changed Values
Discarded
AUTO
-- Configuration --
1: EPS Parameters
ENT:select ESC:exit
(ENT+ESC)
Saving New Values
Please Wait
AUTO
-- Wet Ready - 09:01
QR 0.0l/m Ta 33.0°C
QA 0.0l/m Tp -7.0°C
QB 0.0l/m 0h 00m

A. Starting from sub-menu page No. 1, “Configuration, 1: EPS Parameters”; press “**ENT**” to display page 1; the “**Setting choice**” message appears in the first row.

B. Scroll the display with the “**UP**” or “**DOWN**” keys. The following pages from 2 to 16 contain the descriptions and the values of the other parameters. If you go further you return to page 1.

C. After selecting the required parameter, for example “**1.7: Drain ON Time**”, press **“ENT”**; the message in the first row switches from “**Setting choice**” to “**Value change**”.

D. Use the “**UP**” or “**DOWN**” keys to change the value in row 3 to the desired value. Hold the key down to speed up settings.

A. Press “**ESCAPE**” to discard settings or press “**ENTER**” to confirm changes. The “**Setting choice**” message appears in the first row. If another parameter must be changed, use the “**UP**” or “**DOWN**” keys to select it as described in point “B”.

E. Press “**ESC**” once or twice at any time to return to the sub-menu No. 1 page, “Configuration, 1: EPS Parameters“ and to discard changes.

F. After setting the new values, press the “**ENT**+**ESC**” keys simultaneously to confirm and save the changes. Once saved the “**HOME**” page opens

Edit a parameter

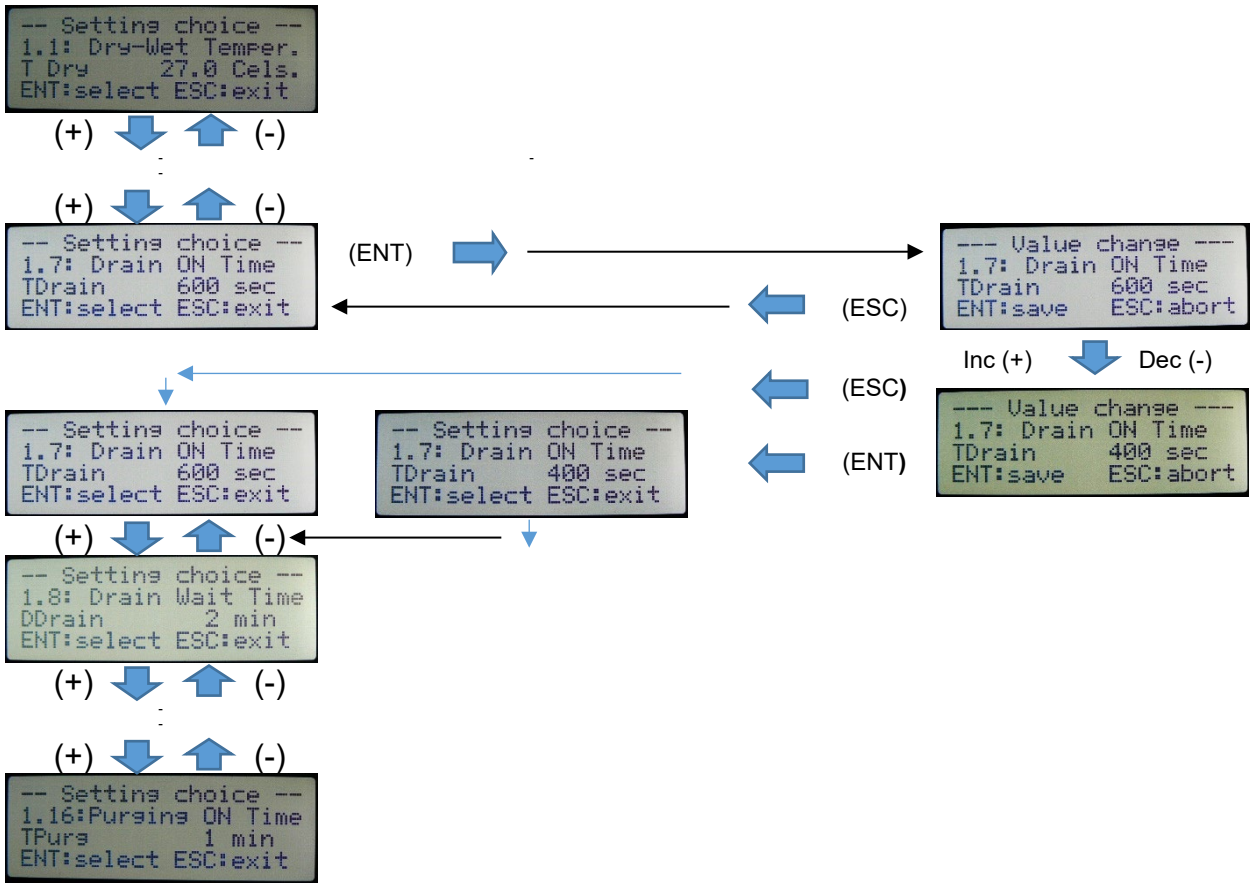

6.5.2. "Programmable Alarm"

It allows you to read, enable or disable programmable alarms.
N.B. By loading a new default configuration, the default alarm configuration is also re-established as per paragraph 6.3

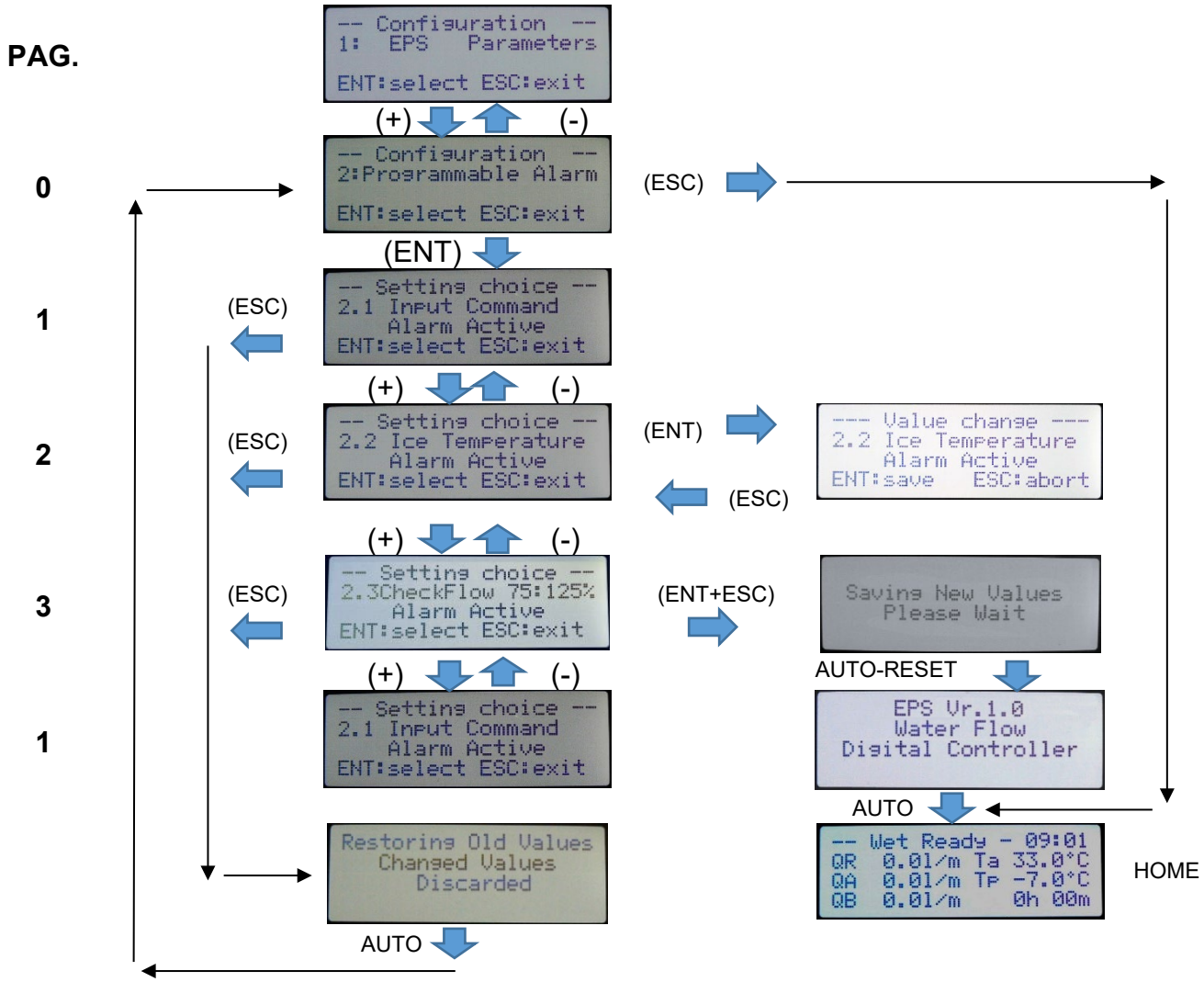

A. Starting from the page in sub-menu No. 2: "Configuration, 2: Programmable Alarm"; press "ENT", page **1** is displayed and the "**Setting choice**" message appears in the first row.

B. Use the "**UP**" or "**DOWN**" keys to scroll forward or back through the following pages **2** and **3** that contain the description and the value of the following parameters. Continue scrolling to return to page **1**.

C. Once the required parameter is selected, for example "**2.2 Ice Temperature**", press "**ENT**"; the "**Setting choice**" message switches to "**Value change**" in the first row. Use the "**UP**" or "**DOWN**" keys to change the value in row No.3 from "**Active**" to "**Bypass**" and vice versa.

D. Press the "**ESC**" key to delete the settings or press "**ENT**" to confirm changes. The "**Setting choice**" message appears in the first row. If another parameter must be changed, use the "**UP**" or "**DOWN**" keys to select it as described in point "B".

E. Press "**ESC**" once or twice at any time to return to the sub-menu No.2 page: "Configuration, 2: Programmable Alarm" and the changes are discarded.

F. After setting new values, press the "**ENT**+**ESC**" keys simultaneously to confirm and save the changes. Once saved the "**HOME**" page opens

6.5.3. "PID Parameters"

It lets you read and change parameters of the two PI flow regulators of the two modulating valves. The two regulators use the same values.

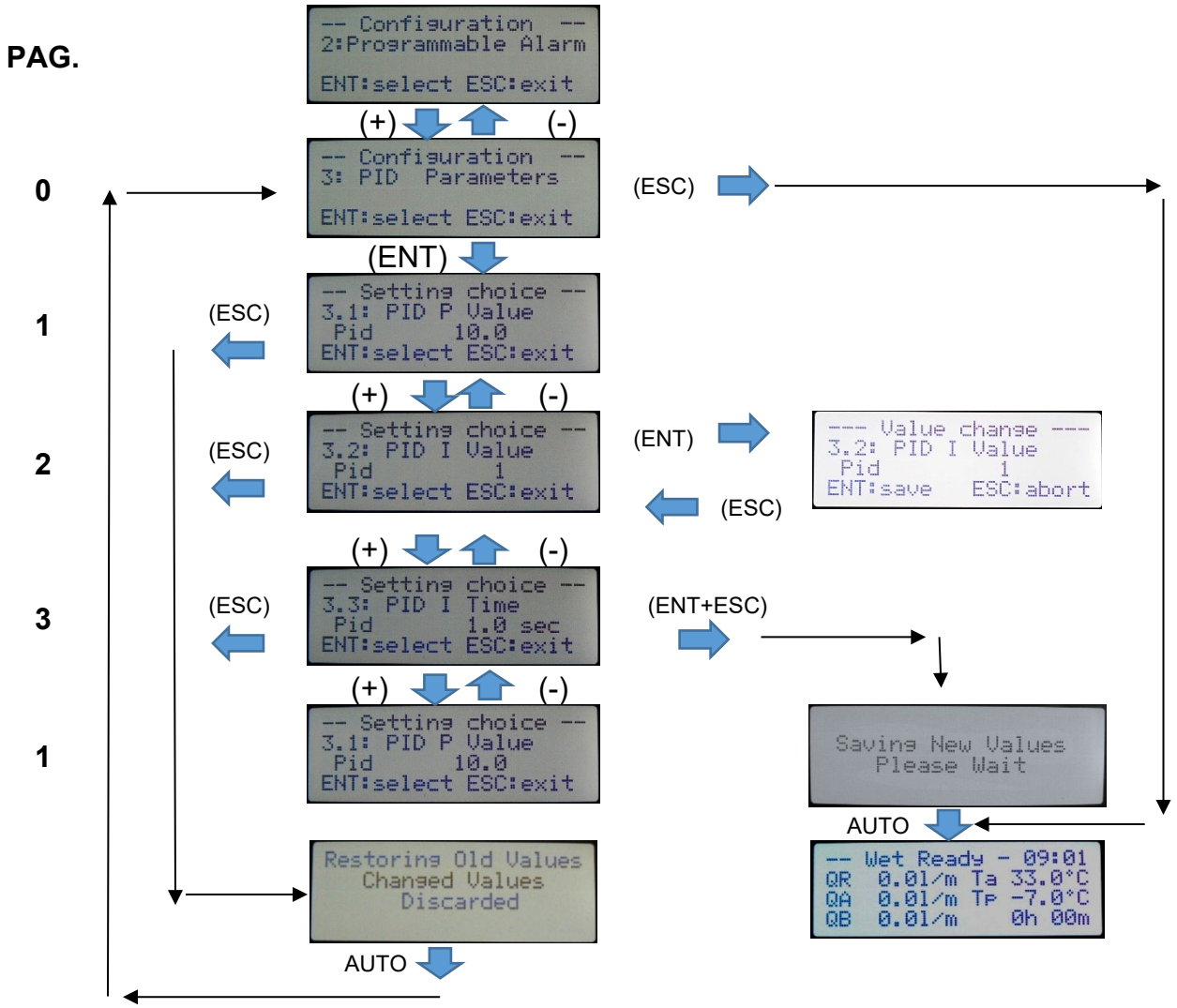

A. Starting from the page in sub-menu No. 3: "Configuration, 3: PID Parameters"; press "ENT" and page **1** is displayed; the "**Setting choice**" message appears in the first row.

B. Use the "**UP**" or "**DOWN**" keys to scroll forward or back through the following pages **2** and **3** that contain the description and the value of the following parameters. Continue scrolling to return to page **1**.

C. Once the required parameter is selected, for example "**3.2 PI I Value**", press "**ENT**"; "**Setting choice**" switches to "**Value change**" in the first row. Use the "**UP**" or "**DOWN**" keys to change the value displayed in row No.3.

D. Press "**ESCAPE**" to discard settings or press "**ENTER**" to confirm changes. The "**Setting choice**" message appears in the first row. If another parameter must be changed, use the "**UP**" or "**DOWN**" keys to select it as described in point "B".

E. Press "**ESC**" once or twice at any time to return to the sub-menu No.3 page: "Configuration, 3 PID Parameters" and the changes are discarded.

F. After setting the new values, press the "**ENT**+**ESC**" keys simultaneously to confirm and save the changes. Once saved the "**HOME**" page opens

6.5.4. "MODBUS Parameters"

The following parameters are for the use of the **RS-485 serial** for the connection to the master unit (PC Host).

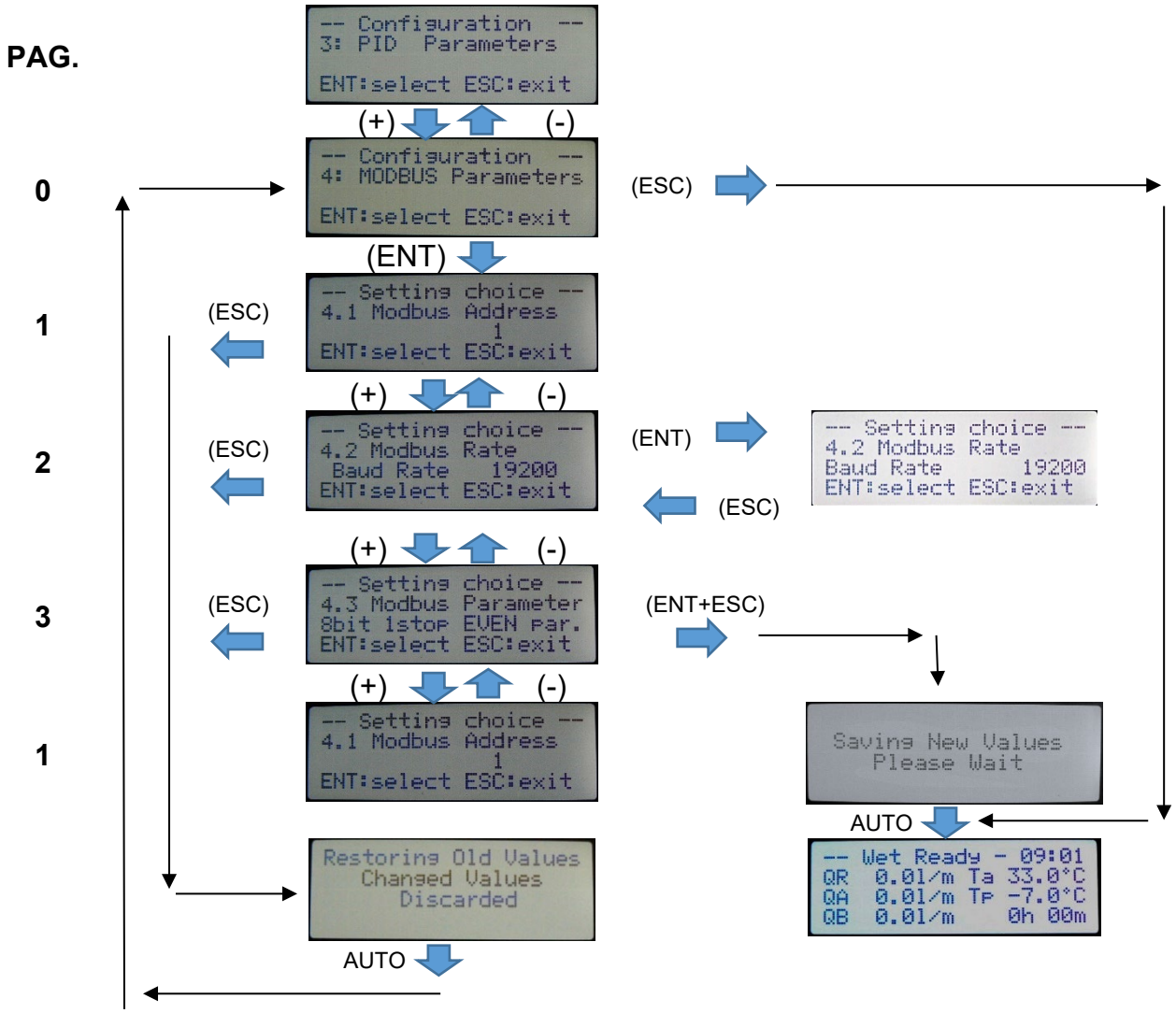

A. Starting from the page in sub-menu No. 4: "Configuration, 4: MODBUS Parameters"; press "ENT" and page **1** is displayed; the "**Setting choice**" message appears in the first row.

B. Use the "**UP**" or "**DOWN**" keys to scroll forward or back through the following pages **2** and **3** that contain the description and the value of the following parameters. Continue scrolling to return to page **1**.

C. Once the required parameter is selected, for example "**4.2 Modbus Rate**", press "**ENT**"; "**Setting choice**" message switches to "**Value change**" in the first row. Use the "**UP**" or "**DOWN**" keys to change the value displayed in row No.3.

D. Press the "**ESC**" key to delete the settings or press "**ENT**" to confirm changes. The "**Setting choice**" message appears in the first row. If another parameter must be changed, use the "**UP**" or "**DOWN**" keys to select it as described in point "B".

E. Press "ESC" once or twice at any time to return to the sub-menu No. 4 page: "Configuration, 4: MODBUS Parameters" and the changes are discarded.

F. After setting new values, press the "**ENT** + **ESC**" to save the changes. Once saved the "**HOME**" page opens.

6.5.5. "RTC: Real Time Clock"

Lets you read and edit the internal clock value (RTC: Real Time Clock).

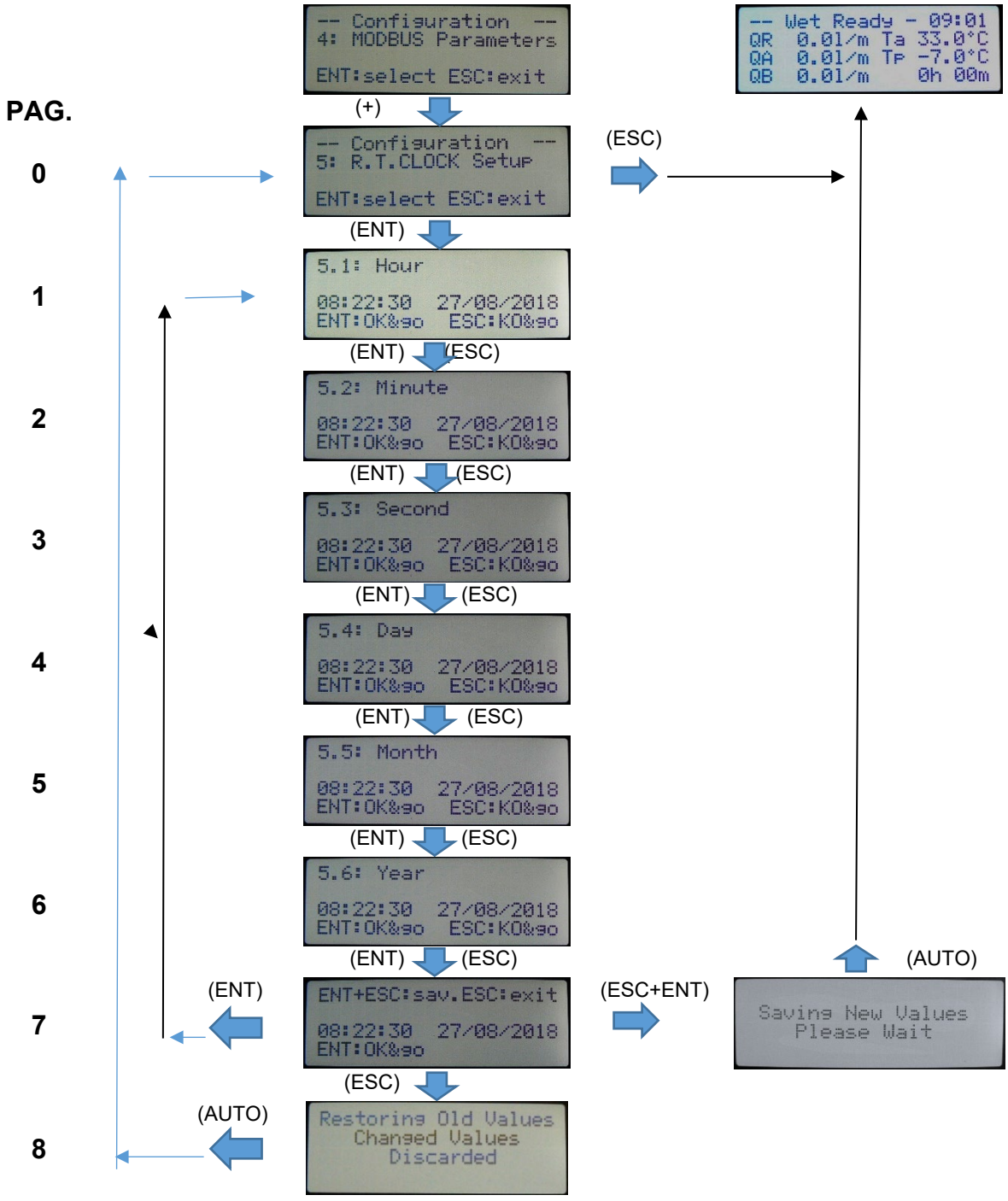

A. Starting from the page in sub-menu No. 5: "Configuration, 5: R.T.CLOCK Setup"; press "**ENT**", to view page **1**, "**5.1 Hour**" appears in the first row, the current value in the third row. During Set-Up, the time remains the input time during set-up plus any changes made.

B. Use the "**UP**" or "**DOWN**" keys to change the hour value, indicated in the third row; press "**ENT**" to switch to minutes saving changes, press "**ESC**" to switch to minutes without saving changes.

C. Continue in the same way for the next pages. Upon reaching the last page, page 7, press "**ENT+ESC**" to save changes and return to the "**HOME**" page. Press "**ENT**" to return to page 1. To discard changes and return to page 0 press "**ESC**".

7. Manual output control

Manual relay and static power output control; lets you check correct wiring and operations of the actuators used. Specifically, you can control relays RL1, RL2, RL3, RL4, RL5, RL6 and static outputs “A - Open”, “A - Close”, “B - Open” and “B - Close”. The current status of the selected output is displayed. This can be changed by pressing “**ENTER**”. The output changes status whenever the key is pressed.
The “**6.11 Calibration”** function lets you power the system, close drains and force maximum valve A and B opening, and to read the corresponding QA and QB flow rates to calibrate any downstream flow balancing valves.
From version 2.0 of the EPS firmware, the temperature and pressure values can be viewed with Imperial units of measure (°F and psi). Therefore, where the text indicates the unit of measure available in °C, it is considered to be °F, and where bar is indicated, it is considered to be psi. For the conversion values, use the following formulas: °F = 32 + (°C x 9/5), psi = bar x 14.5.

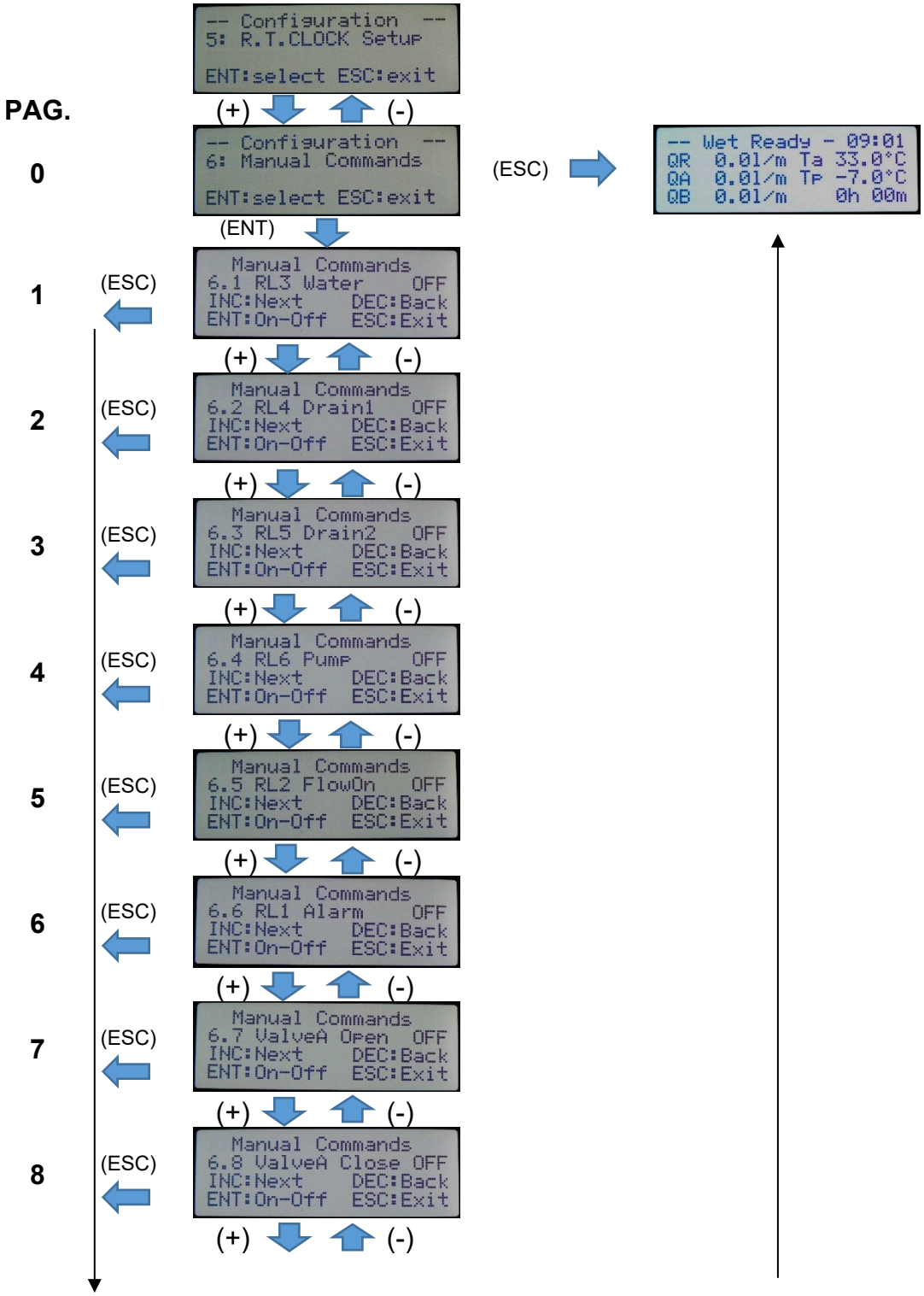

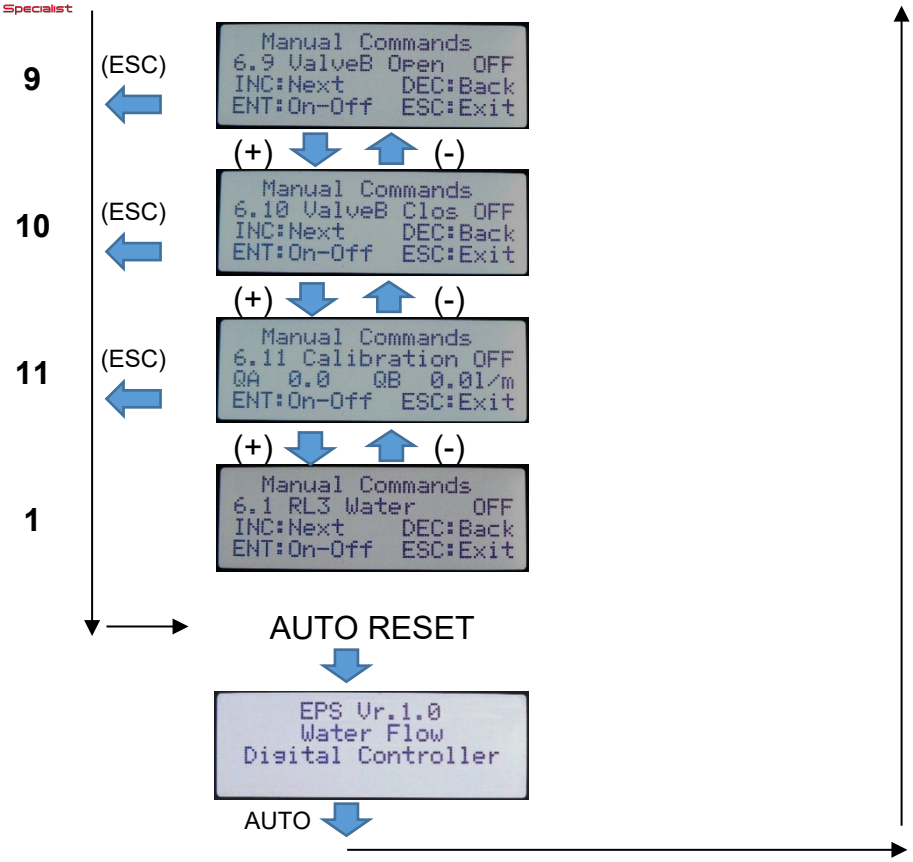
9
(ESC)
Manual Commands
6.9 ValveB Open OFF
INC:Next DEC:Back
ENT:On-Off ESC:Exit
(+)
(-)
10
(ESC)
Manual Commands
6.10 ValveB Clos OFF
INC:Next DEC:Back
ENT:On-Off ESC:Exit
(+)
(-)
11
(ESC)
Manual Commands
6.11 Calibration OFF
QA 0.0 QB 0.0l/m
ENT:On-Off ESC:Exit
(+)
(-)
1
Manual Commands
6.1 RL3 Water OFF
INC:Next DEC:Back
ENT:On-Off ESC:Exit
AUTO RESET
EPS Vr.1.0
Water Flow
Digital Controller
AUTO

8. Alarm and warning messages

Alarm messages are linked to situations that cause EPS regulation to stop. Instead, **Warning messages** are linked to faults that do not block operations.

From version 2.0 of the EPS firmware, the temperature and pressure values can be viewed with Imperial units of measure (°F and psi). Therefore, where the text indicates the unit of measure available in °C, it is considered to be °F, and where bar is indicated, it is considered to be psi. For the conversion values, use the following formulas: °F = 32 + (°C x 9/5), psi = bar x 14.5.

When the device is running normally, the home page is displayed:

1	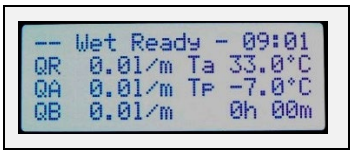	System status: see paragraph 4.2; RTC hours and minutes
2		Required rated water flow, in l/m; external temperature in °C/°F
3		Effective ramp "A" water flow rate ramp , in l/m; plenum temperature in °C/°F
4		Effective ramp "B" water flow rate, in l/m; value totaled by the hour meter

If an alarm is triggered, the corresponding message is displayed **in the first row of the display**; for example, if the external temperature drops below the value set for the ice alarm, the following message appears:

1	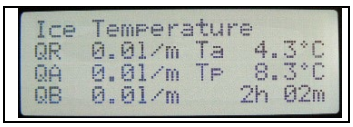	System status: ice alarm (**Ta** < **T Ice**)
2		Input pressure 5.0 bar, control voltage 1.0 V
3		Temperature plenum = **-7.0** °C (19.4 °F), output control relays on: none
4		Value totaled by the liter meter (l/m), value totaled by the hour meter

The cause of the alarm is indicated in the first row of the display with a specific message. If the device is in the normal working phase, the display starts to blink to attract the operator's attention. If in the programming phase, the error is displayed when exiting this phase. **In any case, alarm relay RL1 is de-energized (see paragraph 3.3.5) and LED DL3 turns on and the EPS adjustment cycle is interrupted**

- Alarm messages are displayed one at a time in decreasing order of priority, as per the following table that indicates the relevant cause. A higher priority alarm prevents the display of those with lower priority.

1	**Alarm Power V. MOT**	Power alarm (probable short circuit) on the power supply of motorized valve **(2)**
1	**Fault Motor Valve A**	Fault (overload or open circuit) on motorized valve drive “A” **(3)**
1	**Fault Motor Valve B**	Fault (overload or open circuit) on motorized valve drive “B” **(4)**
1	**Alarm Power ELV**	Power alarm (probable short circuit) on open/closed solenoid valve power **(1)**
1	**Board Overheating**	Stop due to logic board temperature **> 85 °C (185 °F)**
1	**Ice Temperature**	Ice alarm: external temperature below **Ice Alarm Temperature**
1	**IN2 Under or Open**	Input signal IN2 under minimum value (< -4 °C/24.8 °F) or open
1	**IN2 Over or Short**	Input signal IN2 higher than maximum value (> 68 °C/154.4 °F) or short-circuit
1	**IN4 Under or Open**	Input signal IN1 under minimum value (< 1 Vdc) or open
1	**IN4 Over**	Input signal IN1 over maximum value (> 11 Vdc)
1	**IN5 Under or Open**	Input signal IN1 under minimum value (< 1 Vdc)
1	**IN5 Over**	Input signal IN4 over maximum value (> 11V)
1	**IN1 Under or Open**	Input signal IN1 under minimum value (< 1 Vdc)
1	**IN1 Over**	Input signal IN1 over maximum value (> 11 Vdc)

1	**Valve A UnderFlow 75%**	Valve A Flow Rate insufficient (<25%) see note (1)
1	**Valve A OverFlow 125%**	Valve B Flow Rate insufficient (<25%) see note (1)
1	**Valve B UnderFlow75%**	Valve A Flow Rate excessive (>125%) see note (2)
1	**Valve B OverFlow 125%**	Valve B Flow Rate excessive (>125%) see note (2)

Note (1) UnderFlow: error signal with message on the display, RL1 relay open, DL3 turn on but does not adjust the EPS, continuous water distribution

Note (2) OverFlow: error, control is cut-ff; it can be canceled by the reset button, ModBus control, stop/start command. It is automatically reset when the command falls below the Stop threshold for the spray and makes a new attempt.

- All described alarm conditions are self-resetting and automatically canceled when the cause is removed, except for flow rate errors, see Note (1) and Note (2).

9. EC - Declaration of conformity

Direttiva	Codice norma CE	Versione
EMC 2014/30/UE	EN IEC 61800-3 EN IEC 61000-6-2 EN 61000-6-3 EN IEC 55014-1 EN IEC 55014-2	2018 2019 2007 +A1:2011 2021 2021
Safety 2014/35/UE	EN 61800-5-1 EN 60335-1 EN 60730-1	2007 +A1:2017 +A11:2021 2012 +A13:2017 +A2:2019 2017
RoHS 2012/19/UE	EN 50581	2012

9.1. UK - Declaration of conformity

Subject	Name	Version
EMC	BS EN IEC 61800-3 BS EN IEC 61000-6-2 BS EN 61000-6-3 BS EN IEC 55014-1 BS EN IEC 55014-2	2018 2019 2007 +A1:2011 2021 2021

10.Product disposal

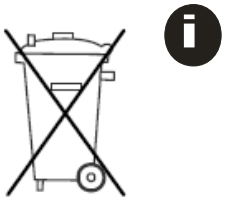

PRODUCT Disposal

The device must be discarded separately according to current local regulations on waste