EMK210: 2-CH SINGLE PHASE MODBUS SLAVE REGULATOR

1. SAFETY INSTRUCTIONS

1.1. Important

- Read these instructions carefully before installation.
- Before use, follow all the installation and electrical connection instructions.
- Keep these instructions with the regulator for future use.
- Observe current technical and safety regulations.
- The device must be professionally installed and commissioned by a qualified technician. INCORRECT installation may cause damages.
- Before turning on device power, always check that it is correctly grounded.
- DO NOT tamper with or REMOVE internal regulator components; this NULL AND VOIDS THE WARRANTY and can cause damages.
- The user must be protected against electrical shock and the motor must be equipped with overload protection, as per current pertinent regulations.
- According to safety regulations, protection against any contact with live parts must be ensured by correct device installation; all parts that ensure protection must be secured so as irremovable without the help of a tool.
- DO NOT turn on the regulator without the protection lid.
- NEVER touch electrical circuit parts when the power is on.
- Install the regulator away from direct sunlight so as not to overheat the case.
- Make sure working conditions (working temperature, humidity, etc.) are within the indicated limits (see point 7).
- Do not install the device near heat sources (resistances, hot air ducts, etc.) where room temperature can exceed 50 °C, devices that generate strong magnetic fields, sites subject to rain, humidity, dust, excessive mechanical vibrations or shocks.

2. EMK REGULATOR UNIT DESCRIPTION

2.1. Overview

The EMK series single phase regulator is characterized by the ability to independently control two ventilation units, called A and B.

The system exclusively works via ModBus commands, that allow the Master controller to manage all parameters, both in read and write.

The Vac voltage value of each output depends on the command percentage written by the Master controller in the specific holding register 200 (see point 5.2.1).

The output matches the written value with an acceleration/deceleration ramp of 6" on a 100% variation.

The content of this register must be refreshed at a frequency under the value written in holding register 201 (see point 5.2.2), otherwise the fans are controlled at the emergency speed set by dip switch SW1 (see point 3.3). The emergency speed is shared by both regulators, A and B, while refresh, in order to be valid, must be individual for regulators A and B. The unit is equipped with inputs for three thermal contacts for controlled ventilation units A and B. This allows overload protections in series with the fan power to be checked, readable from ModBus.

The electronics are located on a multi-layer vetronite support housed in a GW PLAST™ IP56 plastic case (V0 level technopolymer).

The control system is positioned on the upper part of the board with a power connection zone in the lower part.

The control area houses regulation, connection and signaling parts.

2.2. Key

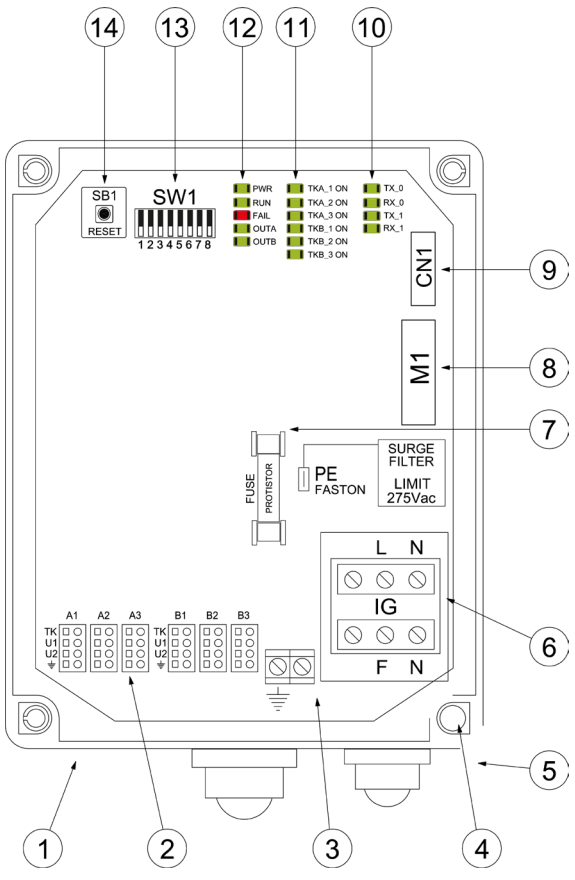

EMK Key		
1	-	Cable clamps - connection cables
2	M9-M4	Mono-phase output terminal board (TK-U1-U2-GND) direct fan connection
3	-	Mono-phase power terminal board (N/F + F/F) + PE
4	-	TPN lock screw with max 2.5 Nm torque
5	-	Wall mount fin
6	IG	Main ON-OFF switch
7	-	CH 10x38 protection fuse (Protistor fuse)
8	M1	ModBus RTU control terminal board
9	CN1	ModBus RTU auxiliary connector for the display
10	TX-RX	ModBus communication signal led unit
11	TK	Motor overload status signal led unit
12	DLx	EMK regulator status signal led unit
13	SW1	Programming dip switch
14	SB1	Reset button

2.3. Mechanical dimensions

Model	Plate data			Mechanical dimensions (mm)					Weight (*) (kg)
	A	W	IP	A	B	C	E	F	
EMK210	2x10	2x2300	55	290	200	183	169	272	2.35

(*) Packaging included

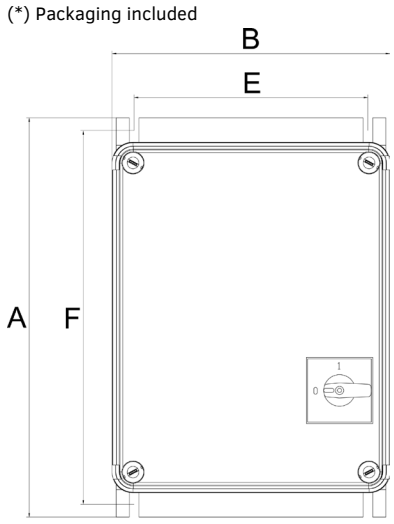

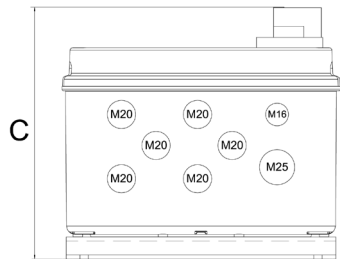

Ø Cable clamp Input		
Input	Min	Max
M25	11 mm	17 mm
M16	6.5 mm	10 mm
6xM20	9 mm	13 mm
Mount	D = 6mm	

3. SAFETY INSTRUCTIONS

3.1. Installation

The regulator can be installed: vertically, horizontally and on the floor.

To permit correct heat dissipation, guarantee 50 mm clearance around the regulator case.

CAUTION! Check correct cable dimensions.

CAUTION! Check the position (0-1) of the IG switch handle and do NOT force switch rotation if NOT correctly positioned.

CAUTION! Check cable clamp closure on the input, the gasket position with screws fully tightened and external protective cover to guarantee IP55 for the device.

3.2. Electrical connections

Flexible cable section.

CAUTION! Use cables suitably dimensioned for the cable clamp holes on the cable input side

ModBus signal: Use ITC BELDEN 15S7D cable

Power: EMK210 ≤ 10 mm² (8 AWG)

N.B.: Protection devices: see point 8.

3.2.1. Power connection (IG) and load (U1/U2)

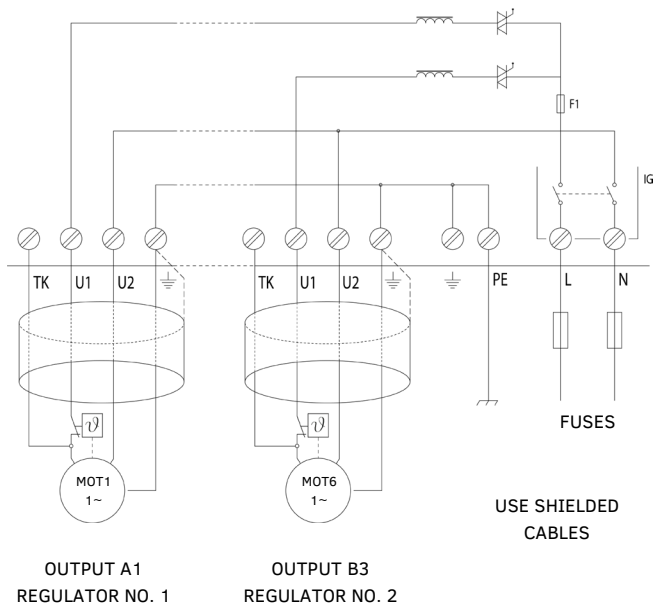

IG	L-N (o L1-L2): power connection 230 Vac (±10%)
PE	Grounding connection PE
Ax,Bx	TK, U1, U2, GND: auxiliary terminals to connect up to two groups of 3 single phase fans + grounding and overloads

3.2.2. Command signal connections (M1)

M1	Terminal	Label	Description
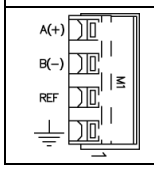	4	A(+)	Positive ModBus signal
	3	B(-)	Negative ModBus signal
	2	REF.	Reference signal
	1	GND	Grounding

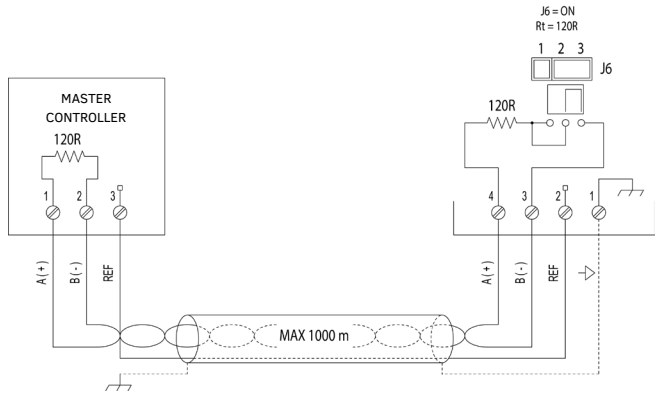

3.2.3. Remote display connection (CN1) (Optional)

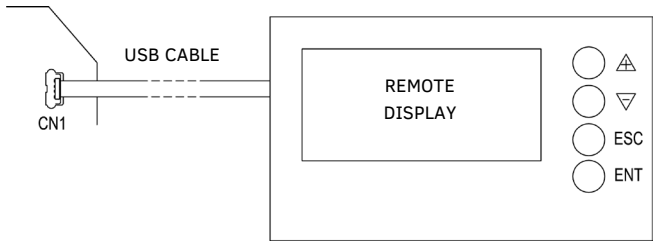

3.3. Function settings via dip switch (SW1 – SW8)

SW1 status				ModBus addresses	
1	2	3	4		
OFF	OFF	OFF	OFF	Address A = 1	Address B = 2
ON	OFF	OFF	OFF	Address A = 3	Address B = 4
…	…	…	…	…	…
OFF	ON	ON	OFF	Address A = 13	Address B = 14
…	…	…	…	…	…
OFF	ON	ON	ON	Address A = 29	Address B = 30
ON	ON	ON	ON	Address A = 31	Address B = 32

SW1 status	ModBus Baud rate
5	
OFF	9600
ON	19200

SW1 status	ModBus communication settings
6	
OFF	8 bit , no parity, 1 stop bit
ON	8 bit , even parity, 1 stop bit

SW1 status		Emergency/Test speed
7	8	
OFF	OFF	0%
ON	OFF	33%
OFF	ON	66%
ON	ON	100%

Default settings are displayed on a gray background

3.3.1. SW1 default settings

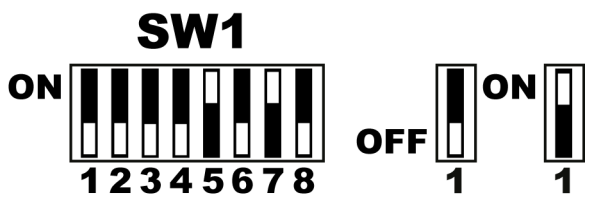

4. FUNCTIONAL CHARACTERISTIC

4.1. Command output

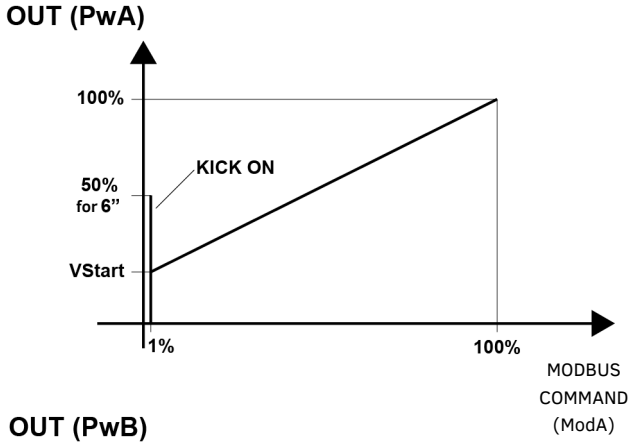

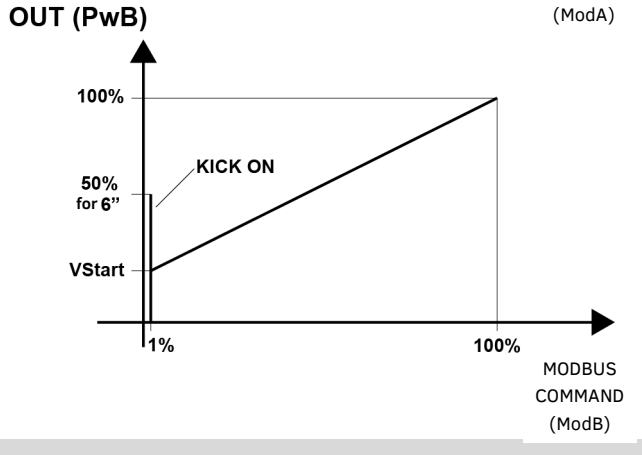

EMK210: 2-CH SINGLE PHASE MODBUS SLAVE REGULATOR

5. EMK REGULATOR MODBUS REGISTERS

The two single-phase regulators A and B, which drive the ventilation units respectively, are equipped with two ModBus register sets. Each register input set from 100 to 107 contains values shared by both regulators while the following registers, both input and holding, are actually differentiated.

5.1. Input register (read only)

5.1.1. I. register 100

Equipment type / Control input settings			
Byte HI: Device type		Byte LO: Input settings	
Value	Description	Value	Description
10	EMK or EMC	20	ModBus input

5.1.2. I. register 101

Hw/Sw: Board used / Software Version			
Byte HI: Board code		Byte LO: Installed SW version	
61	1124-00	Major Version	Minor Version

5.1.3. I. register 102

SW1 dip switch settings					
SW1 status				ModBus addresses	
1	2	3	4		
0	0	0	0	Address A = 1	Address B = 2
1	0	0	0	Address A = 3	Address B = 4
…	…	…	…	…	…
0	1	1	0	Address A = 13	Address B = 14
…	…	…	…	…	…
0	1	1	1	Address A = 29	Address B = 30
1	1	1	1	Address A = 31	Address B = 32
SW1 status				ModBus Baud rate	
5					
0				9600	
1				19200	
SW1 status				ModBus communication settings	
6					
0				8 bit , no parity, 1 stop bit	
1				8 bit , even parity, 1 stop bit	
SW1 status				Emergency/Test speed	
7	8				
0	0			0%	
1	0			33%	
0	1			66%	
1	1			100%	

Positions from SW1-15 to SW1-19 are reserved

5.1.4. I. register 103

MBaddr: Device address on Modbus RTU	
Value	Description
1…..32	ModBus address

5.1.5. I. register 104

MBrate: Baud rate		
Value	Label	Description
19200	19200	Baud Rate 19200
9600	9600	Baud Rate 9600

5.1.6. I. register 105

MBtype: Communication settings		
Value	Label	Description
0	8N1	8 bit , no parity, 1 stop bit
1	8E1	8 bit , even parity, 1 stop bit

5.1.7. I. register 106

Internal board temperature			
Rough values	Actual values	Unit of measure	Conversion rule
0….900 (bit15 = 1 if negative)	-20.0….+90.0	°C	$80C8= -20 ; $0384 = 90

5.1.8. I. register 107

Co: Output value (in percent power voltage)			
Rough values	Actual values	Unit of measure	Conversion rule
0….100	0….100	%	0= 0% ; 100= 100%

5.1.9. I. register 108

In: ModBus Control			
Rough values	Actual values	Unit of measure	Conversion rule
0….100	0….100	%	0= 0% ; 100= 100%

5.1.10. I. register 109

Byte LO: Overload status / Byte HI: Error code N.B. There must be output voltage to correctly read overload status (H.register 200 >0). Otherwise, the reading may be incorrect	
Bit 0	Overload status TK1, 0= OK, 1= error
Bit 1	Overload status TK2, 0= OK, 1= error
Bit 2	Overload status TK3, 0= OK, 1= error
Bit 3…7	Reserved
Bit 8	Board temperature > 85°C, output forced to 0%
Bit 9…15	Reserved

5.2. Holding register (read and write)

N.B. The value written in holding registers is immediately executed but not saved.

5.2.1. H. register 200

CMD: Command from Master Modbus in value 0-100% with an acceleration/deceleration ramp of 6" on a 100% variation				
Rough values	Actual values	Default	Unit of measure	Conversion rule
0….100	0….100	0	%	0= 0% ; 100= 100%

5.2.2. H. register 201

Time: Maximum time between two ModBus communications N.B. Without communications for the set time, fans are controlled at emergency/test speed (see point 3.3). Both A and B regulators are refreshed				
Rough values	Actual values	Default	Unit of measure	Conversion rule
2….60	2….60	10	seconds	2= 2s ; 60= 60s

5.2.3. H. register 202

Cosfi: Motor power factor N.B. Only edit the parameter with motors stopped (H. register 200=0)				
Rough values	Actual values	Default	Unit of measure	Conversion rule
0….100	0….100	20	%	0= 0% ; 100= 100%

H. register 203

Commands and forcing (valid for both channels)	
Bit 0	Reset microprocessor: 0= run ; 1= reset
Bit 1	Reload default values
Bit 2	Kick On: forces output 50% for 6" when H. register 200 becomes > 0
Bit 3	Kick Off: disables Kick On
Bit 4…15	Reserved

5.2.4. H. register 204

VStart: Regulation start voltage N.B. Only edit the parameter with motors stopped (H. register 200=0)				
Rough values	Actual values	Default	Unit of measure	Conversion rule
0….50	0….50	0	%	0= 0% ; 50= 50%

6. SIGNALS

6.1. Led

LED	COLOR	LABEL	DESCRIPTION
	GREEN	PWR	Power on (light on)
	GREEN	RUN	Microprocessor running (blinking light)
	RED	FAIL	Fault alarm Internal temperature > 85°C
	GREEN	OUTA	Address A output command (light on)
	GREEN	OUTB	Address B output command (light on)
	GREEN	TKA_1 ON	A1 overload output closed (light on) (*)
	GREEN	TKA_2 ON	A2 overload output closed (light on) (*)
	GREEN	TKA_3 ON	A3 overload output closed (light on) (*)
	GREEN	TKB_1 ON	B1 overload output closed (light on) (*)
	GREEN	TKB_2 ON	B2 overload output closed (light on) (*)
	GREEN	TKB_3 ON	B3 overload output closed (light on) (*)
	GREEN	TX_0	ModBus address A write command on (blinking light)
	GREEN	RX_0	ModBus address A read command on (blinking light)
	GREEN	TX_1	ModBus address B write command on (blinking light)
	GREEN	RX_1	ModBus address B read command on (blinking light)

(*) WARNING: If there is no output voltage (OUTA and/or OUTB LEDs off), TKA and/or TKB LEDs may not be able to indicate correctly the status of the thermals.

7. TECHNICAL SPECIFICATIONS

7.1. Power supply

Voltage: 230 Vac (±10%) mono-phase (Phase/Neutral or Phase/Phase)
Frequency: 50/60 Hz automatically recognized
Surge: for installation category II (4 kV) (> 500 Vac surge filters ON)

7.2. Rated current (RMS) @ 50 °C (room temperature)

Load current: For each output: 10 A < 50 °C; > 50 °C -0.6 A/°C
Overload current: 250% of rated current (max 10'' every 100'')
Absorbed power: 5 V A (command circuits)
Dissipated power in the room: For each output 20 W @ 10 A
Functional characteristic: SLAVE regulator with ModBus command

7.3. Input signals and contacts

Command channel RS485 (M1): RS485 isolated, with ModBus-RTU slave protocol for remote control.
Service channel RS485 (CN1) RS485 not isolated with ModBus-RTU master protocol for remote display (see point 3.2.3)

7.4. Output signals and contacts

Motor drive and overload read: Two pairs of 3 4-polar terminal boards: Overload status read (TK), Load step phase (U1), Neutral (U2) and protection grounding.

7.5. Alarms

Command input: No ModBus communications
Fans run at emergency speed set by SW1.
Regulator: Working temperature control with internal probe (T > 85 °C).

7.6. Protections

Surge: As per EN 61000-4-5: surge category II (4 kV).
Internal temperature: Internal heat protection.
Power module: Standard fuse 10x38 25 A 690 V model FR10GR69V25 (Protistor).

7.7. Case

Materials: GW-PLAST™ in V0 technopolymer (temperature < 85 °C) and aluminum.
Pollution: 2 using the supplied cable clamp kit
Fire resistance: category D.
Protection grade: IP55

7.8. Insulation

Case: Class I (use of grounded PE protection conductor).
Command: 4000 V between command input and mains voltage parts.

7.9. Working conditions

Working temperature: from -25 °C to 50 °C
Storage temperature: from -30 °C to 85 °C
Humidity: from 0% to 85% non-condensing relative humidity
Vibrations: ≤ 1 g (9.8 m/s²)

7.10. Assembly

Assembly: vertical, horizontal or on the floor

8. CIRCUIT BREAKER AND SHORT CIRCUIT PROTECTION

A series of fuses (Protistor fuses) are installed on the EMK regulator to protect the power module.

Model	Circuit breaker protection	Protection fuses - SRC			
		Type	Vac	Amp	P/N
EMK210	20 A	10x38	690	25	FR10GR69V25

To complete, we recommend to protect the power line by providing a circuit breaker with AC trigger curve and current threshold over 20 A installed upstream from the regulator or a pair of fuses.
The use of both protections safeguard regulation device and connection cable electrical integrity.

SURGE ARRESTER :
Electrical protection inserted between the regulator power supply and grounding, that protects the device from transitory power surges.

WARNING Disconnect the faston contact from the PE ground reference, in the electrical rigidity test.

WARNING For DIFFERENTIAL protection systems, use components with grounded current dispersion ≥ 60 mA.

EMK has a grounded current dispersion of about 1 mA.

9. MANUFACTURER'S DECLARATION

This instrument was designed and constructed for use in industrial environments and meets the following community directives:

- Low Voltage Directive (LVD) 201/35/EU
- Electromagnetic Compatibility Directive (EMC) 2014/30/EU

10. DIRECTIVES AND TECHNICAL STANDARDS

The essential directive requirements are met by compliance with "generic standards" for the industrial environment

10.1. CE – Declaration of conformity

Directive	Standard code	Version
EMC 2014/30/EU	EN 55014-1	2021
	EN 55014-2	1997 + A1:2001 + IS1:2007 + A2:2008
	EN 61000-3-2	2014
	EN 61000-3-3	2013
	EN 61000-6-2	2019
	EN 61000-6-3	2007 +A1:2011
	EN 61800-3	2018
Safety 2014/30/EU	EN 60335-1	2012 +A13:2017 +A2:2019
	EN 60730-1	2017
	EN 61800-5-1	2007 +A1:2017 +A11:2021
RoHS	EN 50581	2012

10.2. UK – Declaration of conformity

Subject	Name	Version
EMC	BS EN 55014-1	2021
	BS EN 55014-2	1997 + A1:2001 + IS1:2007 + A2:2008
	BS EN 61000-3-2	2014
	BS EN 61000-3-3	2013
	BS EN 61000-6-2	2019
	BS EN 61000-6-3	2007 +A1:2011
	BS EN 61800-3	2018
Safety	BS EN 60335-1	2012 +A13:2017 +A2:2019
	BS EN 60730-1	2017
	BS EN 61800-5-1	2007 +A1:2017 +A11:2021
RoHS	BS EN 50581	2012

With reference to EMC compatibility, according to markings:

The instrument must be disposed of according to local electric and electronic device disposal regulations.