ECN - DIGITAL REGULATOR FOR MASTER MANAGEMENT OF HEAT EXCHANGERS WITH EC FANS

1. SAFETY INSTRUCTIONS

1.1. Important

- Read these instructions carefully before installation.
- Before use, follow all the installation and electrical connection instructions.
- Keep these instructions with the regulator for future use.
- Observe current technical and safety regulations.
- The controller must be professionally installed and commissioned by a qualified technician; INCORRECT installation may cause damages.
- Before turning on controller power, always check that it is correctly grounded.
- DO NOT tamper with or REMOVE internal regulator components; this NULL AND VOIDS THE WARRANTY and can cause damages.
- The user must be protected against electrical shock and the motor must be equipped with overload protection, as per current pertinent regulations.
- According to safety regulations, protection against any contact with live parts must be ensured by correct controller installation; all parts that ensure protection must be secured so as irremovable without the help of a tool.
- DO NOT turn on the regulator without the protection lid.
- NEVER touch electrical circuit parts when the power is on.
- Install the controller away from direct sunlight so as not to overheat the case.
- Make sure working conditions (working temperature, humidity, etc.) are within the indicated limits (see point 7).
- Do not install the controller near heat sources (resistances, hot air ducts, etc.) where room temperature can exceed 50 °C, devices that generate strong magnetic fields, sites subject to rain, humidity, dust, excessive mechanical vibrations or shocks.

2. DESCRIPTION OF ECN

2.1. Overview

The EC Nano (ECN) control system is a simple, functional digital control unit, suitable for managing motorized actuators, with remove control input 0(1)-10 V.

The integrated software is specialized for the dynamic management of electronic switching (EC) motors used on fan cooled heat exchangers, for the Dry-Cooler and Remote Condenser modes.

The controller can manage the temperature or work pressure, managing the regulation both in PID mode (with IES algorithm: Intelligent Energy Saving) and in Proportional mode, to maintain the desired Pressure or Temperature value of the exiting fluid.

The FRIENDLY setting of the Set-Point (SP) allows for rapid commissioning of the system; the working parameters are set using digital switches that guarantee and maintain stable the value of the work point selected.

The ECN controller is available in three (3) versions, with two (2) surveillance inputs per 4 - 20 mA transducer and NTC sensor (10 kOhm @ 25 °C).

In the standard version, one (1) input per transducer is supplied in current 4 - 20 mA and one (1) for NTC sensor (as per point 3.2.5).

The controller automatically selects the channel with the largest value.

The ECN system can be powered either using 24 Vac or 20 Vdc; the maximum current supplied must support the transducers (max 2 x 20 mA) connected to the reading inputs (M2)

It is available in two different mechanical versions:

- for DIN-rail assembly (IP00);
- for outdoor assembly (IP66);

The functions provided and available for selection using the Dip-Switches complete the technical offering for efficient, effective control.

2.2. Key

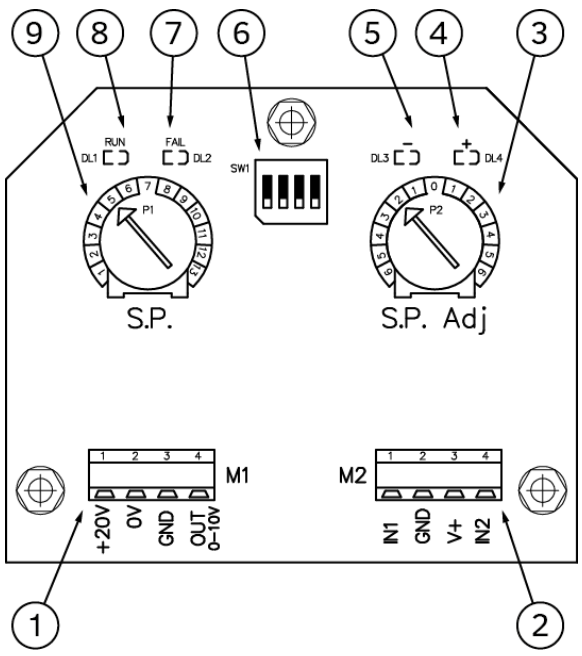

ECN Key		
1	M1	Power supply terminal board and 0(1) - 10 V output
2	M2	Surveillance sensor input terminal board
3	P2	Trimmer for fine adjustment of the Set Point
4	DL4	Signal LED input value greater than Set Point
5	DL3	Signal LED input value less than Set Point
6	SW1	Dip Switches for Configuration
7	DL2	Alarm signal LED
8	DL1	Power supply OK LED
9	P1	Trimmer for the working set point selection

2.3. Mechanical dimensions

Model	Plate Data			Mechanical Dimensions					Weight (*)
	IP	A	W	A	B	C	E	F	Kg
ECN	00	-	-	76	91	49	-	-	0.1
ECN	66	12	2400	110	110	57	90	90	0.2

(*) Packaging included

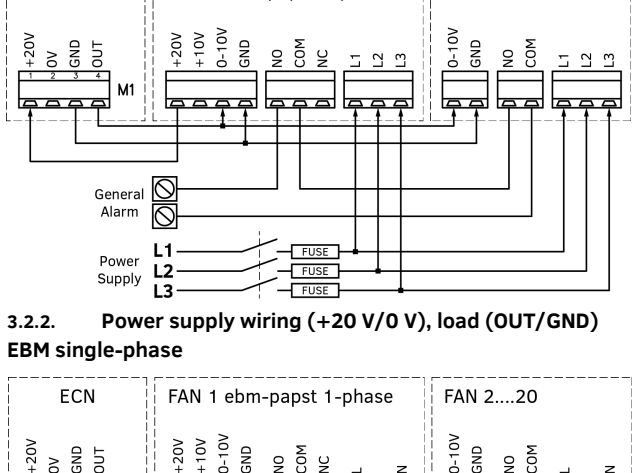

3. INSTALLATION

3.1. Installation

Vertically install the device with the wire inlet facing down.

Reassemble and make sure the external protection lid is fully closed.

3.2. Electrical connections

Nominal flexible cable maximum section.

Signal (Input): ≤ 2.5 mm² (14 AWG) Torque: ≤ 0.5 Nm

Signal (Output): ≤ 2.5 mm² (14 AWG) ≤ 0.5 Nm

Power supply: ≤ 2.5 mm² (14 AWG) ≤ 0.5 Nm

3.2.1. Power supply wiring (+20 V/0 V), load (OUT/GND) EBM three-phase

3.2.2. Power supply wiring (+20 V/0 V), load (OUT/GND) EBM single-phase

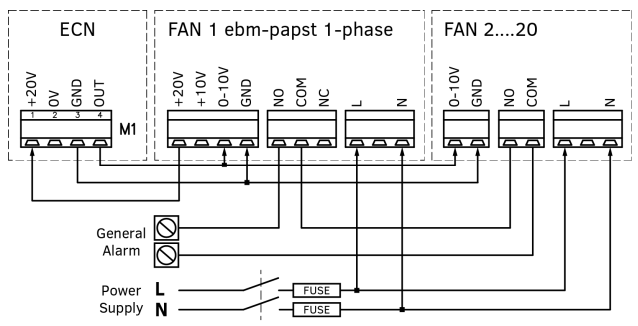

3.2.3. Power supply wiring (+20 V/0 V), load (OUT/GND) ZIEHL three-phase

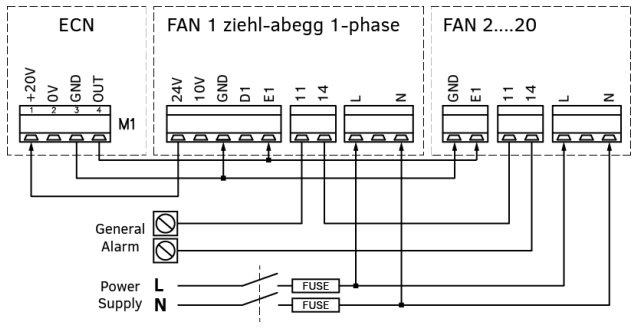

3.2.4. Power supply wiring (+20 V/0 V), load (OUT/GND) ZIEHL single-phase

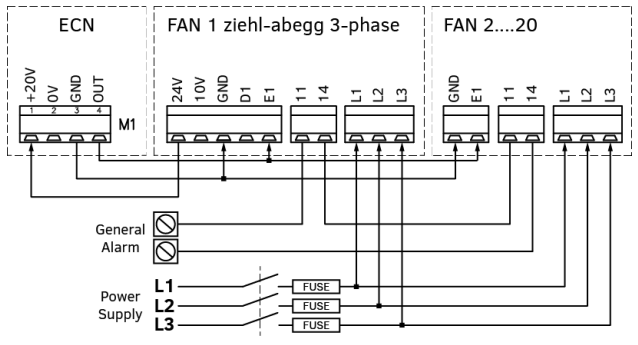

3.2.5. Command signal connections (M2)

M2	Terminal	Label	Description
IN1 GND V+ IN2	1	IN1	Input NTC 10 K@25 °C or 4 - 20 mA (depends on the input configuration chosen)
	2	GND	Reference grounding
	3	V+	Reference voltage output +22.0 Vdc (± 20 %)
	4	IN2	Input NTC 10 K@25 °C or 4 - 20 mA (depends on the input configuration chosen)

3.2.5.1. Model “D” input connections (IN1 = NTC, IN2 = 4 - 20 mA)

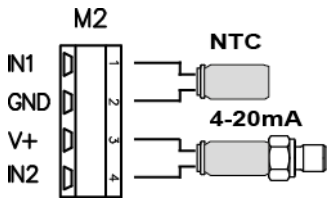

3.2.5.2. Model “M” input connections (IN1 = IN2 = 4 - 20 mA)

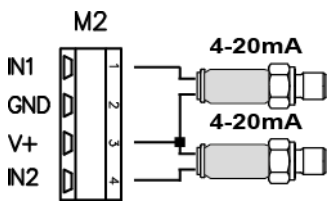

N.B. If there is a double current transducer, it is not recommended to power the controller using the 20 V from the fan.

3.2.5.3. Model “T” input connections (IN1 = IN2 = NTC)

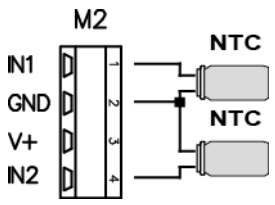

3.3. Function settings via SW1

SW1	Description			
1	**OFF***	Proportional Control	ON	PID control
2	**OFF***	Direct Mode	ON	Reverse mode
3	**OFF***	Output 0 - 10 Vdc	ON	Output 1 - 10
4	Reserved			

(*) Factory selection

3.4. SW1 default configuration



4. FUNCTION SPECIFICATIONS

4.1. Proportional operating dynamics: Direct and reverse

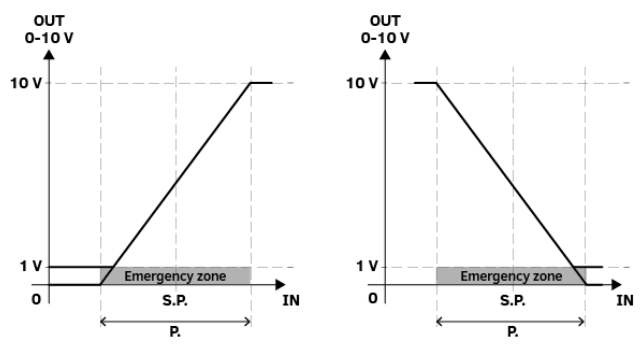

4.2. PID operating dynamics: Direct and reverse

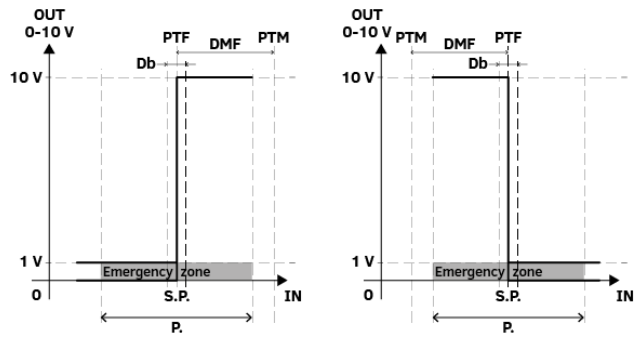

OUT	Command value 0(1) - 10 V at output
IN	Signal value at selected/active input
SP	Set Point Value (SP + SP Adj)
P.	Proportional band
PTF	**Minimum** design pressure or temperature
PTM	**Maximum** design pressure or temperature
DMF	Difference between PTM and PTF
Db	Dead band, equal to ±2.5% of P.

ECN - DIGITAL REGULATOR FOR MASTER MANAGEMENT OF HEAT EXCHANGERS WITH EC FANS

5. SETTINGS

5.1. Set Point Settings

The Set Point value is given by the algebraic sum of the SP plus the SP Adj.
The Set Point (SP) is at the center of the proportional band.

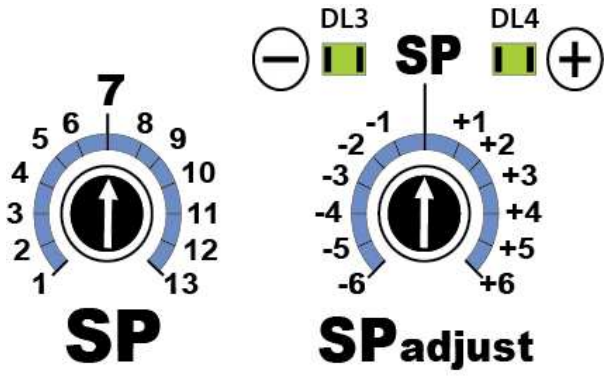

5.2. Default values

Control Scale	Working set point (Set Point)	Proportional band
4 - 20 mA	12.0 mA	2.5 mA
0 - 15 bar	7.5 bar	2.4 bar
0 - 25 bar	12.5 bar	3.9 bar
0 - 30 bar	15.0 bar	4.7 bar
0 - 45 bar	22.5 bar	7.0 bar
5 - 65 °C	35.0 °C	7.0 °C

5.3. SP and SP Adj Range

5.3.1. Scale 4 - 20 mA (Proportional Band 2.5 mA)

- SP Adj						mA		+ SP Adj					
-6	-5	-4	-3	-2	-1	SP		+1	+2	+3	+4	+5	+6
5.4	5.5	5.6	5.7	5.8	5.9	**1**	**6**	6.1	6.2	6.3	6.4	6.5	**6.6**
6.4	6.5	6.6	6.7	6.8	6.9	**2**	**7**	7.1	7.2	7.3	7.4	7.5	**7.6**
7.4	7.5	7.6	7.7	7.8	7.9	**3**	**8**	8.1	8.2	8.3	8.4	8.5	**8.6**
8.4	8.5	8.6	8.7	8.8	8.9	**4**	**9**	9.1	9.2	9.3	9.4	9.5	**9.6**
9.4	9.5	9.6	9.7	9.8	9.9	**5**	**10**	10.1	10.2	10.3	10.4	10.5	**10.6**
10.4	10.5	10.6	10.7	10.8	10.9	**6**	**11**	11.1	11.2	11.3	11.4	11.5	**11.6**
11.4	11.5	11.6	11.7	11.8	11.9	**7**	**12**	12.1	12.2	12.3	12.4	12.5	**12.6**
12.4	12.5	12.6	12.7	12.8	12.9	**8**	**13**	13.1	13.2	13.3	13.4	13.5	**13.6**
13.4	13.5	13.6	13.7	13.8	13.9	**9**	**14**	14.1	14.2	14.3	14.4	14.5	**14.6**
14.4	14.5	14.6	14.7	14.8	14.9	**10**	**15**	15.1	15.2	15.3	15.4	15.5	**15.6**
15.4	15.5	15.6	15.7	15.8	15.9	**11**	**16**	16.1	16.2	16.3	16.4	16.5	**16.6**
16.4	16.5	16.6	16.7	16.8	16.9	**12**	**17**	17.1	17.2	17.3	17.4	17.5	**17.6**
17.4	17.5	17.6	17.7	17.8	17.9	**13**	**18**	18.1	18.2	18.3	18.4	18.5	**18.6**

5.3.2. Scale 0 - 15 bar (Proportional Band 2.4 bar)

- SP Adj						bar		+ SP Adj					
-6	-5	-4	-3	-2	-1	SP		+1	+2	+3	+4	+5	+6
1.28	1.38	1.48	1.58	1.68	1.78	**1**	1.88	1.98	2.08	2.18	2.28	2.38	**2.48**
2.21	2.31	2.41	2.51	2.61	2.71	**2**	2.81	2.91	3.01	3.11	3.21	3.31	**3.41**
3.15	3.25	3.35	3.45	3.55	3.65	**3**	3.75	3.85	3.95	4.05	4.15	4.25	**4.35**
4.09	4.19	4.29	4.39	4.49	4.59	**4**	4.69	4.79	4.89	4.99	5.09	5.19	**5.29**
5.03	5.13	5.23	5.33	5.43	5.53	**5**	5.63	5.73	5.83	5.93	6.03	6.13	**6.23**
5.96	6.06	6.16	6.26	6.36	6.46	**6**	6.56	6.66	6.76	6.86	6.96	7.06	**7.16**
6.90	7.00	7.10	7.20	7.30	7.40	**7**	**7.5**	7.60	7.70	7.80	7.90	8.00	**8.10**
7.84	7.94	8.04	8.14	8.24	8.34	**8**	8.44	8.54	8.64	8.74	8.84	8.94	**9.04**
8.78	8.88	8.98	9.08	9.18	9.28	**9**	9.38	9.48	9.58	9.68	9.78	9.88	**9.98**
9.71	9.81	9.91	10.01	10.11	10.21	**10**	10.3	10.41	10.51	10.61	10.71	10.81	**10.91**
10.65	10.75	10.85	10.95	11.05	11.15	**11**	11.2	11.35	11.45	11.55	11.65	11.75	**11.85**
11.59	11.69	11.79	11.89	11.99	12.09	**12**	12.1	12.29	12.39	12.49	12.59	12.69	**12.79**
12.53	12.63	12.73	12.83	12.93	13.03	**13**	13.1	13.23	13.33	13.43	13.53	13.63	**13.73**

5.3.3. Scale 0 - 25 bar (Proportional Band 3.9 bar)

- SP Adj						bar		+ SP Adj					
-6	-5	-4	-3	-2	-1	SP		+1	+2	+3	+4	+5	+6
2.53	2.63	2.73	2.83	2.93	3.03	**1**	3.13	3.23	3.33	3.43	3.53	3.63	**3.73**
4.09	4.19	4.29	4.39	4.49	4.59	**2**	4.69	4.79	4.89	4.99	5.09	5.19	**5.29**
5.65	5.75	5.85	5.95	6.05	6.15	**3**	6.25	6.35	6.45	6.55	6.65	6.75	**6.85**
7.21	7.31	7.41	7.51	7.61	7.71	**4**	7.81	7.91	8.01	8.11	8.21	8.31	**8.41**
8.78	8.88	8.98	9.08	9.18	9.28	**5**	9.38	9.48	9.58	9.68	9.78	9.88	**9.98**
10.34	10.44	10.54	10.64	10.74	10.84	**6**	10.94	11.04	11.14	11.24	11.34	11.44	**11.54**
11.90	12.00	12.10	12.20	12.30	12.40	**7**	**12.5**	12.60	12.70	12.80	12.90	13.00	**13.10**
13.46	13.56	13.66	13.76	13.86	13.96	**8**	14.06	14.16	14.26	14.36	14.46	14.56	**14.66**
15.03	15.13	15.23	15.33	15.43	15.53	**9**	15.63	15.73	15.83	15.93	16.03	16.13	**16.23**
16.59	16.69	16.79	16.89	16.99	17.09	**10**	17.19	17.29	17.39	17.49	17.59	17.69	**17.79**
18.15	18.25	18.35	18.45	18.55	18.65	**11**	18.75	18.85	18.95	19.05	19.15	19.25	**19.35**
19.71	19.81	19.91	20.01	20.11	20.21	**12**	20.31	20.41	20.51	20.61	20.71	20.81	**20.91**
21.28	21.38	21.48	21.58	21.68	21.78	**13**	21.88	21.98	22.08	22.18	22.28	22.38	**22.48**

5.3.4. Scale 0 - 30 bar (Proportional Band 4.7 bar)

- SP Adj						bar		+ SP Adj					
-6	-5	-4	-3	-2	-1	SP		+1	+2	+3	+4	+5	+6
3.15	3.25	3.35	3.45	3.55	3.65	**1**	3.75	3.85	3.95	4.05	4.15	4.25	**4.35**
5.03	5.13	5.23	5.33	5.43	5.53	**2**	5.63	5.73	5.83	5.93	6.03	6.13	**6.23**
6.90	7.00	7.10	7.20	7.30	7.40	**3**	7.50	7.60	7.70	7.80	7.90	8.00	**8.10**
8.78	8.88	8.98	9.08	9.18	9.28	**4**	9.38	9.48	9.58	9.68	9.78	9.88	**9.98**
10.65	10.75	10.85	10.95	11.05	11.15	**5**	11.25	11.35	11.45	11.55	11.65	11.75	**11.85**
12.53	12.63	12.73	12.83	12.93	13.03	**6**	13.13	13.23	13.33	13.43	13.53	13.63	**13.73**
14.40	14.50	14.60	14.70	14.80	14.90	**7**	**15.00**	15.10	15.20	15.30	15.40	15.50	**15.60**
16.28	16.38	16.48	16.58	16.68	16.78	**8**	16.88	16.98	17.08	17.18	17.28	17.38	**17.48**
18.15	18.25	18.35	18.45	18.55	18.65	**9**	18.75	18.85	18.95	19.05	19.15	19.25	**19.35**
20.03	20.13	20.23	20.33	20.43	20.53	**10**	20.63	20.73	20.83	20.93	21.03	21.13	**21.23**
21.90	22.00	22.10	22.20	22.30	22.40	**11**	22.50	22.60	22.70	22.80	22.90	23.00	**23.10**
23.78	23.88	23.98	24.08	24.18	24.28	**12**	24.38	24.48	24.58	24.68	24.78	24.88	**24.98**
25.65	25.75	25.85	25.95	26.05	26.15	**13**	26.25	26.35	26.45	26.55	26.65	26.75	**26.85**

5.3.5. Scale 0 - 45 bar (Proportional Band 7 bar)

- SP Adj						bar		+ SP Adj					
-6	-5	-4	-3	-2	-1	SP		+1	+2	+3	+4	+5	+6
5.03	5.13	5.23	5.33	5.43	5.53	**1**	5.63	5.73	5.83	5.93	6.03	6.13	6.23
7.84	7.94	8.04	8.14	8.24	8.34	**2**	8.44	8.54	8.64	8.74	8.84	8.94	9.04
10.65	10.75	10.85	10.95	11.05	11.15	**3**	11.25	11.35	11.45	11.55	11.65	11.75	11.85
13.46	13.56	13.66	13.76	13.86	13.96	**4**	14.06	14.16	14.26	14.36	14.46	14.56	14.66
16.28	16.38	16.48	16.58	16.68	16.78	**5**	16.88	16.98	17.08	17.18	17.28	17.38	17.48
19.09	19.19	19.29	19.39	19.49	19.59	**6**	19.69	19.79	19.89	19.99	20.09	20.19	20.29
21.90	22.00	22.10	22.20	22.30	22.40	**7**	**22.50**	22.60	22.70	22.80	22.90	23.00	23.10
24.71	24.81	24.91	25.01	25.11	25.21	**8**	25.31	25.41	25.51	25.61	25.71	25.81	25.91
27.53	27.63	27.73	27.83	27.93	28.03	**9**	28.13	28.23	28.33	28.43	28.53	28.63	28.73
30.34	30.44	30.54	30.64	30.74	30.84	**10**	30.94	31.04	31.14	31.24	31.34	31.44	31.54
33.15	33.25	33.35	33.45	33.55	33.65	**11**	33.75	33.85	33.95	34.05	34.15	34.25	34.35
35.96	36.06	36.16	36.26	36.36	36.46	**12**	36.56	36.66	36.76	36.86	36.96	37.06	37.16
38.78	38.88	38.98	39.08	39.18	39.28	**13**	39.38	39.48	39.58	39.68	39.78	39.88	39.98

5.3.6. NTC Scale 5 - 65 °C (Proportional Ban = 7 °C)

- SP Adj						°C		+ SP Adj					
-6	-5	-4	-3	-2	-1	SP		+1	+2	+3	+4	+5	+6
2.0	2.5	3.0	3.5	4.0	4.5	1	5	5.5	6.0	6.5	7.0	7.5	8.0
7.0	7.5	8.0	8.5	9.0	9.5	2	10	10.5	11.0	11.5	12.0	12.5	13.0
12.0	12.5	13.0	13.5	14.0	14.5	3	15	15.5	16.0	16.5	17.0	17.5	18.0
17.0	17.5	18.0	18.5	19.0	19.5	4	20	20.5	21.0	21.5	22.0	22.5	23.0
22.0	22.5	23.0	23.5	24.0	24.5	5	25	25.5	26.0	26.5	27.0	27.5	28.0
27.0	27.5	28.0	28.5	29.0	29.5	6	30	30.5	31.0	31.5	32.0	32.5	33.0
32.0	32.5	33.0	33.5	34.0	34.5	**7**	**35**	35.5	36.0	36.5	37.0	37.5	38.0
37.0	37.5	38.0	38.5	39.0	39.5	8	40	40.5	41.0	41.5	42.0	42.5	43.0
42.0	42.5	43.0	43.5	44.0	44.5	9	45	45.5	46.0	46.5	47.0	47.5	48.0
47.0	47.5	48.0	48.5	49.0	49.5	10	50	50.5	51.0	51.5	52.0	52.5	53.0
52.0	52.5	53.0	53.5	54.0	54.5	11	55	55.5	56.0	56.5	57.0	57.5	58.0
57.0	57.5	58.0	58.5	59.0	59.5	12	60	60.5	61.0	61.5	62.0	62.5	63.0
62.0	62.5	63.0	63.5	64.0	64.5	13	65	65.5	66.0	66.5	67.0	67.5	68.0

5.4. Examples of settings

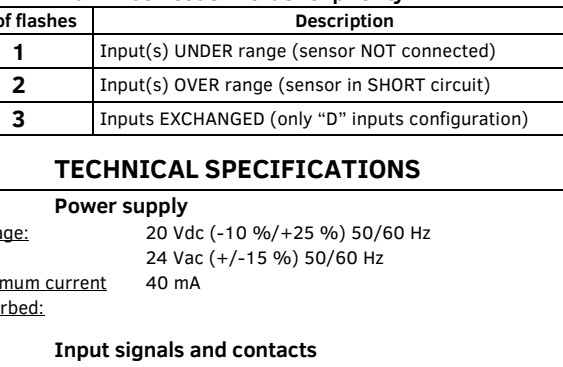

Control Scale	Working set point (Set Point)	Proportional band
4 - 20 mA	10.4 mA	2.5 mA
0 - 15 bar	6.03 bar	2.4 bar
0 - 25 bar	9.78 bar	3.9 bar
0 - 30 bar	11.65 bar	4.7 bar
0 - 45 bar	17.28 bar	7.0 bar
5 - 65 °C	27.0 °C	7.0 °C

6. SIGNALS

6.1. LED

LED	Color	Label	Description
	GREEN	**RUN**	Power on (light on)
	RED	**FAIL**	Fault alarm (flashing light) see point 6.2
	GREEN	**–**	Signal in input lower than SP (flashing light)
	GREEN	**+**	Signal in input greater than SP (flashing light)

N.B. If the "+" and "-" LEDs flash at the same time, the input signal is equal to the SP

6.2. Alarm flash code in order of priority

No. of flashes	Description
1	Input(s) UNDER range (sensor NOT connected)
2	Input(s) OVER range (sensor in SHORT circuit)
3	Inputs EXCHANGED (only "D" inputs configuration)

7. TECHNICAL SPECIFICATIONS

7.1. Power supply

Voltage: 20 Vdc (-10 %/+25 %) 50/60 Hz
24 Vac (+/-15 %) 50/60 Hz
Maximum current absorbed: 40 mA

7.2. Input signals and contacts

Analog: NTC 10K@25 °C
4 - 20 mA (Ri = 100 Ω)

7.3. Output signals and contacts

Auxiliary power: 20 Vdc (±20%), ≤ 20 mA not stabilized and protected against short circuit
Analog output: 0/1-10 V (±1 %)

7.4. Alarms

Command input: 4 - 20 mA
NTC: cut off (or T < 0 °C)
short circuit (or T > 75 °C)

7.5. Case (only IP66)

Materials: Polypropylene and reinforced fiberglass (T < 100 °C)
Pollution: High pollution
Fire resistance: Header with hot wire 750 °C, compliant with EN 60695-2-11

7.6. Working conditions

Working temperature: From -20 °C to 50 °C
Storage temperature: From -25 °C to 65 °C
Humidity: From 0% to 85% non-condensing relative humidity
Vibrations: ≤ 1 g (9.8 m/s²)

8. CODE CRITERIA

The following table shows the code construction rules

ZD ECN	a	bbb	c	d	e	f	g	h	i

a	power supply	**1**	single phase	
bbb	power supply voltage	**020**	20 Vdc (-10 %/+25 %) 24 Vac (+/- 15 %)	
c	power type	**D**	Vac/Vdc	
d	Set Point no.	**1**	SP (SP+SP Adj)	
e	input type		Input 1	Input 2
		D	0 - 70 °C	4 - 20 mA
		M	4 - 20 mA	4 - 20 mA
		T	0 - 70 °C	0 - 70 °C
f	case	**B**	DIN-rail (IP00)	
		S	IP66	
g	not used	**0**	not used	
h	reserved	**0**	reserved character	
i	revision index	**1**	last revision codified	

9. MANUFACTURER'S DECLARATION

This instrument was designed and constructed for use in industrial environments and meets the following community directives:

- Low Voltage Directive (LVD) 2014/35/EU
- Electromagnetic Compatibility Directive (EMC) 2014/30/EU

10. DIRECTIVES AND TECHNICAL STANDARDS

The essential directive requirements are met by compliance with product standards.

10.1. CE – Declaration of conformity

Directive	Standard code	Version
EMC 2014/30/EU	EN 55014-1	2021
	EN 55014-2	1997 + A1:2001 + IS1:2007 + A2:2008
	EN 61000-3-2	2014
	EN 61000-3-3	2013
	EN 61000-6-2	2019
	EN 61000-6-3	2007 +A1:2011
	EN 61800-3	2018
Safety 2014/35/EU	EN 60335-1	2012 +A13:2017 +A2:2019
	EN 60730-1	2017
	EN 61800-5-1	2007 +A1:2017 +A11:2021
RoHS	EN 50581	2012

10.2. UK – Declaration of conformity

Subject	Name	Version
EMC	BS EN 55014-1	2021
	BS EN 55014-2	1997 + A1:2001 + IS1:2007 + A2:2008
	BS EN 61000-3-2	2014
	BS EN 61000-3-3	2013
	BS EN 61000-6-2	2019
	BS EN 61000-6-3	2007 +A1:2011
	BS EN 61800-3	2018
Safety	BS EN 60335-1	2012 +A13:2017 +A2:2019
	BS EN 60730-1	2017
	BS EN 61800-5-1	2007 +A1:2017 +A11:2021
RoHS	BS EN 50581	2012

With reference to EMC compatibility, according to markings:

The instrument must be disposed of according to local electric and electronic device disposal regulations