ECB REGULATOR EC BASIC

1. SAFETY INSTRUCTIONS

1.1. Important

- Read these instructions carefully before installation.
- Before use, follow all the installation and electrical connection instructions.
- Keep these instructions with the regulator for future use.
- Observe current technical and safety regulations.
- The device must be professionally installed and commissioned by a qualified technician. INCORRECT installation may cause damages.
- Before turning on device power, always check that it is correctly grounded.
- DO NOT tamper with or REMOVE internal regulator components; this NULL AND VOIDS THE WARRANTY and can cause damages.
- The user must be protected against electrical shock and the motor must be equipped with overload protection, as per current pertinent regulations.
- According to safety regulations, protection against any contact with live parts must be ensured by correct device installation; all parts that ensure protection must be secured so as irremovable without the help of a tool.
- DO NOT turn on the regulator without the protection lid.
- NEVER touch electrical circuit parts when the power is on.
- Install the regulator away from direct sunlight so as not to overheat the case.
- Make sure working conditions (working temperature, humidity, etc.) are within the indicated limits (see point 0).
- Do not install the device near heat sources (resistances, hot air ducts, etc.) where room temperature can exceed 50 °C, devices that generate strong magnetic fields, sites subject to rain, humidity, dust, excessive mechanical vibrations or shocks.

2. ECB100 REGULATOR UNIT DESCRIPTION

2.1. Overview

ECB is a compact and configurable digital controller, designed for proportional or PI control of EC motors in HVAC/R systems, such as remote condensers, dry coolers and high-efficiency cooling units. It supports 24 Vac, 230 Vac or 400 Vac power supply (±10%), with automatic 50/60 Hz frequency selection.

The two analogue outputs, one voltage output (0-10 Vdc) and one current output (4-20 mA), allow direct control of up to 30 EC motors, offering flexible management even on extended systems. The outputs are short-circuit protected. The controller features two programmable analogue inputs, operating in parallel, with automatic selection of the higher value. Control can be set in direct or reverse proportional mode, or the PI algorithm can be enabled. Thanks to an optional plug, a second setpoint selectable via an ON-OFF input can be enabled. ECB offers four programmable digital inputs and one alarm relay, and is available in IP55 or IP00 version..

2.2. Key

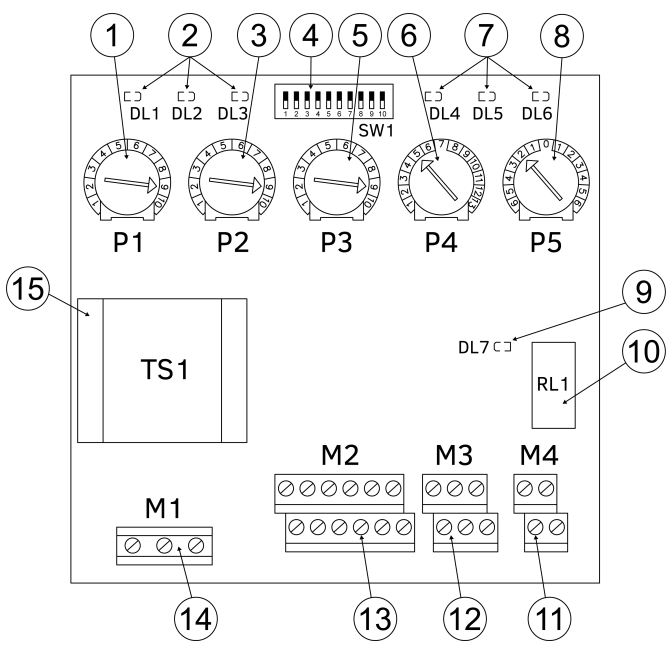

No.	Label	ECB100 Key
1	MAX	Maximum trimmer (see 5.1).
2	DL1, 2 and 3	Signal LED (see 6.1).
3	MIN	Minimum trimmer (see 5.1).
4	SW1_1-10	Settings SW1 (see 3.6).
5	PB	P.B. trimmer (see 5.2).
6	SP	S.P. trimmer (see 5.2).
7	DL4, 5 and 6	Signal LED (see 6.1).
8	SP ADJ	S.P. Adj. trimmer (see 5.2).
9	DL7	Signal LED (see 6.1).
10	RL1	Relay
11	M4	Relay connection terminal board (see 3.5).
12	M3	ON-OFF input connection terminal board (see point 3.2.3).
13	M2	Control signal connection terminal board (see point 3.2.2).
14	M1	Power connection terminal board (only if ≥ 230 Vac) (see point 3.2.1).
15	TS1	Transformer

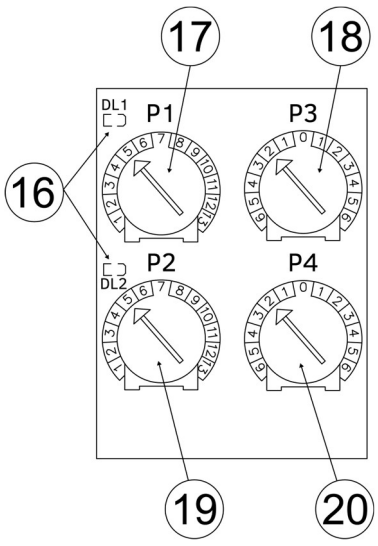

No.	Label	Optional plug key
16	DL1 and 2	Signal LED (see 6.1).
17	SP1	Set Point 1 Trimmer
18	SP ADJ1	Set Point 1 fine tuning trimmer
19	SP2	Set Point 2 trimmer
20	SP ADJ2	Set Point 1 fine tuning trimmer

2.3. Mechanical dimensions

Model	Plate data			Mechanical dimensions (mm)					Weight (*)
	A	V A	IP	A	B	C	E	F	kg
ECB1024 ECB1230 ECB1400	-	3	00	125	120	63	-	-	0.8 kg
	-	3	55	199	203	85	172	55	1 kg

* Packaging included

2.3.1. IP00

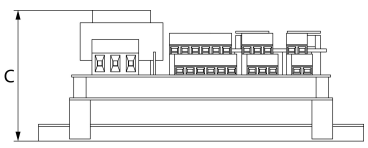

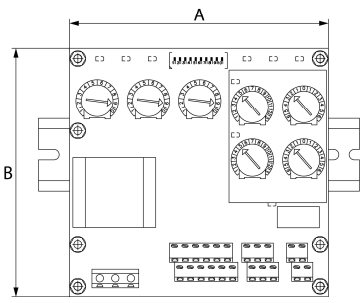

2.3.2. IP55

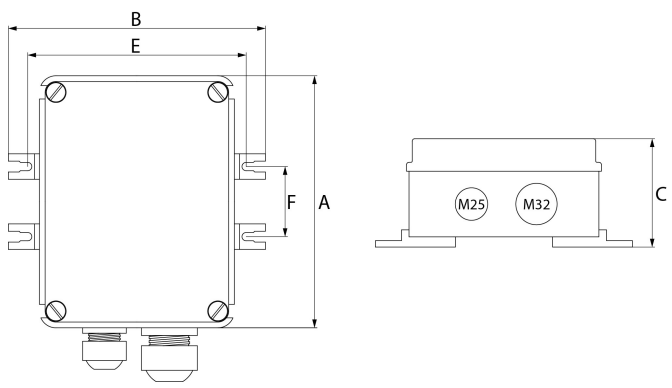

3. INSTALLATION

3.1. Installation (IP55 only)

Use the four supplied brackets for wall mount. Vertically install the device with the wire inlet facing down. Reassemble and make sure the external protection lid is fully closed.

3.2. Electrical connections

Flexible wire section.

Signal: rated section 1.5 mm² (15 AWG)

Power: rated section ≥ 1.5 mm² (15 AWG)

N.B. Protection devices: see point 8.

3.2.1. Power connection (M1)

24, 230 or 400 Vac power

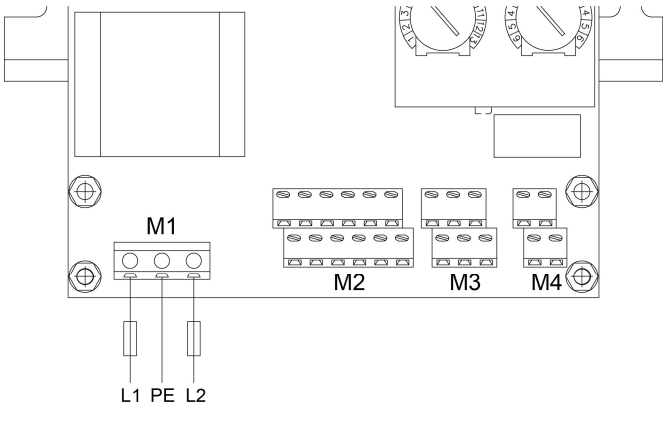

3.2.2. Command signal connections (M2)

M2	Terminal	Label	Description
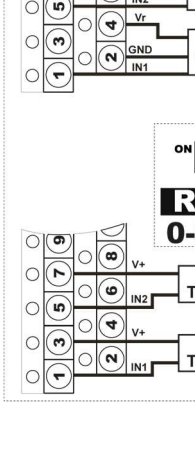	1	IN1	Transducer signal input
	2	GND	Reference grounding
	3	V+	Power voltage output +20.0 Vdc (±20%)
	4	Vr	Reference voltage output +5,0 / +10,0 Vdc (±1,0%)
	5	IN2	Transducer signal input
	6	GND	Reference grounding
	7	V+	Power voltage output +20.0 Vdc (±20%)
	8	Vr	Reference voltage output +5,0 / +10,0 Vdc (±1,0%)
	9	OUT1	0-10 Vdc analog output
	10	GND	Reference grounding
	11	OUT2	0-20 mA analog output
	12	GND	Reference grounding

ECB REGULATOR EC BASIC

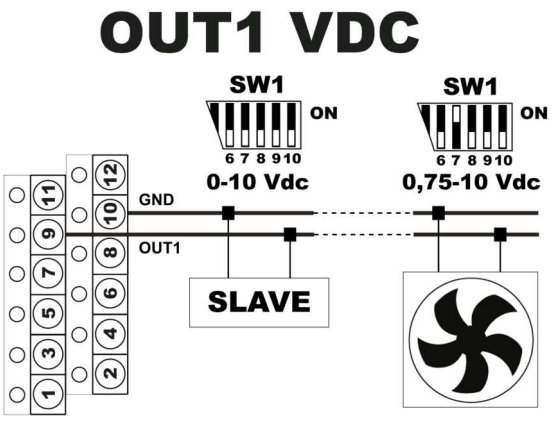

The 0-10 Vdc output emits 15 mA maximum current.
The same connected device resistance values cannot thus exceed 700 Ω.
For example, with an EBM-PAPST motor type A3G800AT21-01, that has 100 kΩ input resistance, up to 100 fans can be driven.

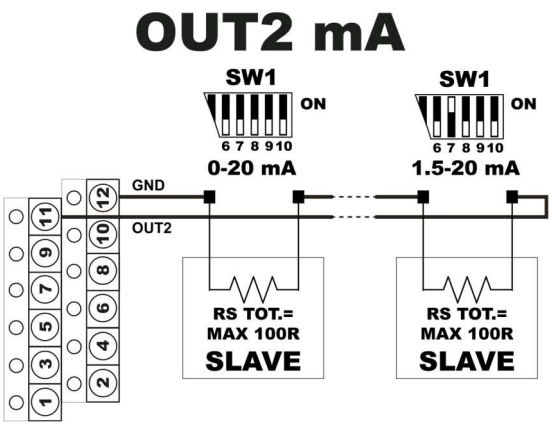

For the 0-20 mA output, the series of connected device resistance values cannot exceed 800 Ω.
For example, with an EBM-PAPST motor type A3G800AT21-01, that has 100 kΩ input resistance, up to 8 fans can be driven.

3.2.3. ON-OFF input connections (M3)

M3	Termin	Label	Description
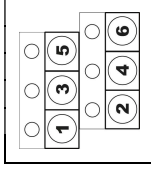	1	S1	"Reverse" function
	2	S2	“Set Point no. 2” function
	3	GND	Reference grounding
	4	GND	Reference grounding
	5	S3	“MAX” function
	6	S4	“Start/Stop” function

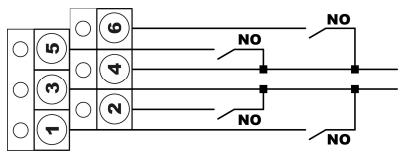

3.2.3.1. “Reverse” function

With the "Reverse" function on, the output decreases as the input increases. With the same settings, the functional characteristics mirror those shown in the graphs (see point 4).

3.2.3.2. “Set Point no. 2” function

If the optional plug is installed for the second Set Point, this function remotely selects one of the two Set Points.

3.2.3.3. “MAX” function

This function turns on:
- night limit;
- fixed speed.

based on DSw4 and DSw5 settings (see point 3.7.2).
The "night limit" function lets you remotely turn maximum speed limitation set via the P1 trimmer on or off.
The “fixed speed” function allows, when activated, to force the output to a predefined value, adjustable via trimmer P1, and it also operates when the controller is in an alarm state.

3.2.3.4. “Start/Stop” function

This function lets you force the output to 0 Vdc.
We recommend you use this function instead of shutdown if the regulator is exposed to temperatures under 0 °C.

N.B. Do not work on the regulator with the power on.

3.5. Alarm relay connection (M4)

M4	Terminal	Label	Description
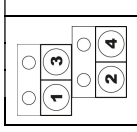	1	NC	Normally closed contact
	2	COM	Shared terminal
	3	NO	Normally open contact
	4	COM	Shared terminal

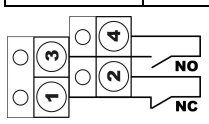

3.6. Dip-Switch function settings (SW1_1-10)

SW1	Status	Description
1,2,3		Input configuration selection (see section 3.7.1)
4,5	-	Maximum trimmer operating mode selection (P1) (see point 3.7.2)
6	OFF	MIN: The output does not drop under the MIN value
	ON	CUT-OFF: The output turns off when MIN is reached
7	ON	Lower output limit at 0.75 Vdc on
8	ON	PI regulation mode on
9	OFF	Master control mode
	ON	Slave control mode (only for 0–10 Vdc, 0–20 mA and 4–20 mA)
10	OFF	Activate Unlock/Antilock function

3.7. SW1 default settings

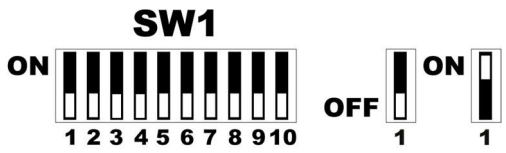

3.7.1. Command input function programming

SW1_1	SW1_2	SW1_3	Description
OFF	OFF	OFF	Transducer 0-10 Vdc
OFF	ON	OFF	Transducer 0-5 Vdc
ON	OFF	OFF	Transducer 4-20 mA
ON	ON	OFF	Sensor NTC 10 kΩ 25 °C
OFF	OFF	ON	Transducer 0-20 mA

3.7.2. Functional programming for maximum trimmer (P1)

SW1_4	SW1_5	Description
OFF	OFF	MAX limitation, not affected by S3 status
OFF	ON	S3= ON, fixed speed on (adjustable via P1)
ON	OFF	S3= ON, night limit on (adjustable via P1)
ON	ON	Not used

4. FUNCTIONAL CHARACTERISTIC

SLAVE

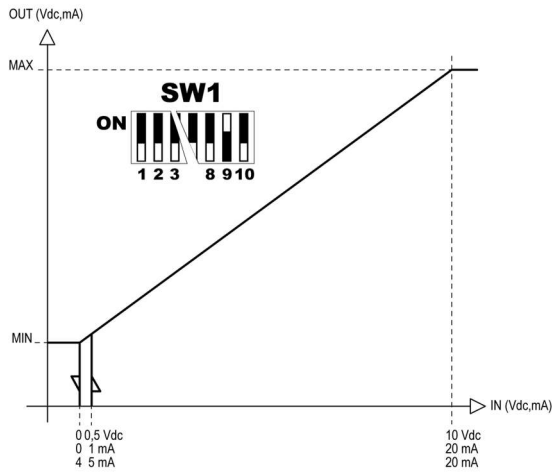

SLAVE REVERSE (S1 contact closed on GND)

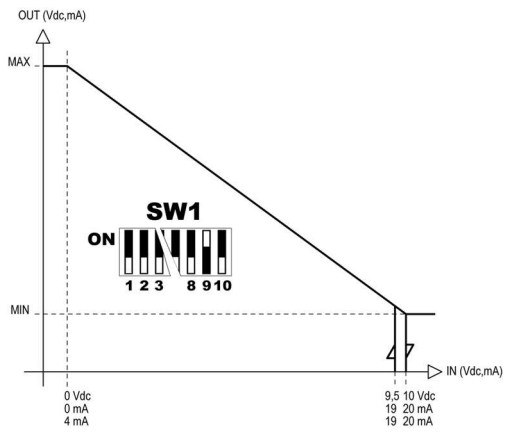

Label	Description
OUT	0-10 Vdc/4-20 mA output command value
IN	Prevalent input signal value
MAX	Maximum speed limitation
MIN	Minimum speed

The command changes as the prevalent input signal changes.
The action can be direct or reverse.

MASTER “P”

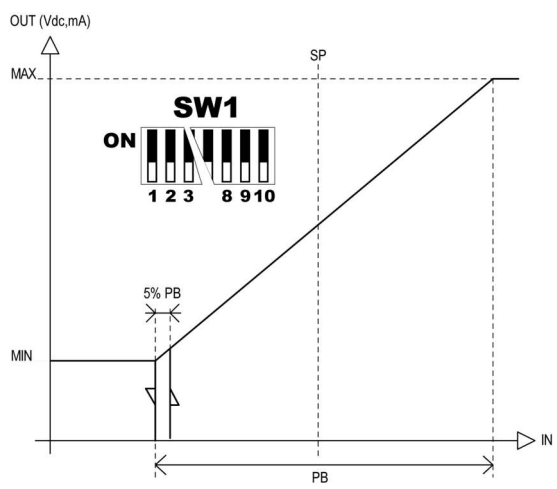

MASTER “P” REVERSE (S1 contact closed on GND)

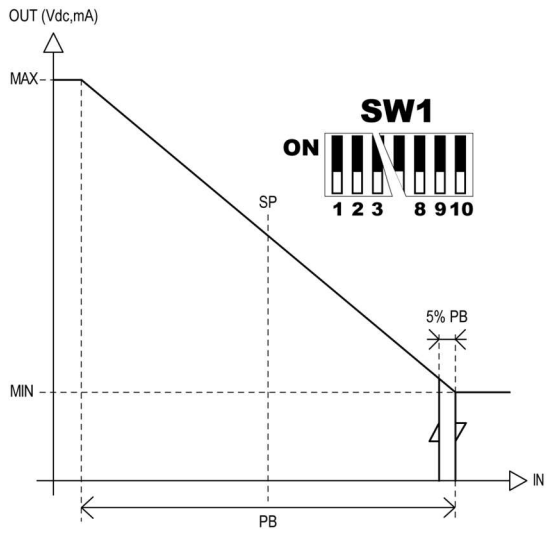

Label	Description
OUT	0-10 Vdc/4-20 mA output command value
IN	Prevalent input signal value
S.P.	Set Point
MAX	Maximum speed limitation
P.B.	Proportional band
MIN	Minimum speed

The command changes to keep the prevalent input within the proportional band (P.B.).
The action can be direct or reverse.

MASTER “PI”

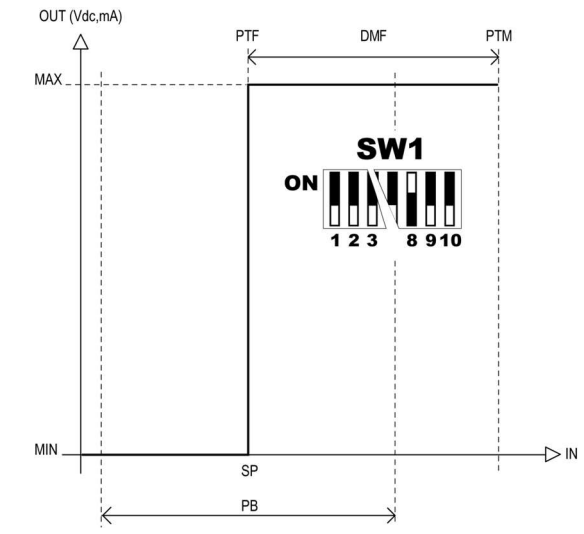

MASTER “PI” REVERSE (S1 contact closed on GND)

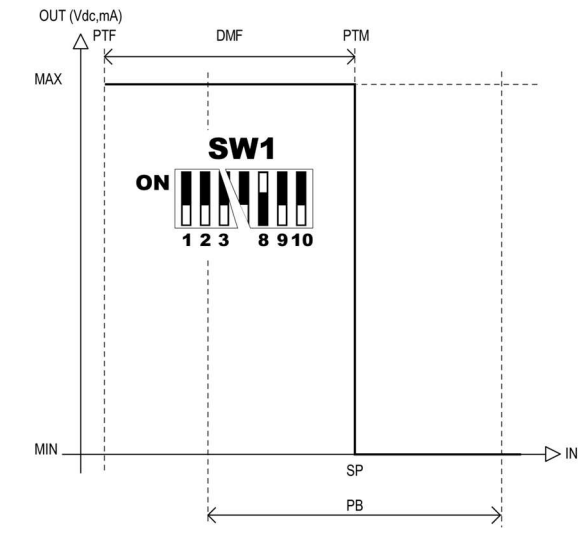

Label	Description
OUT	0-10 Vdc/4-20 mA output command value
IN	Prevalent input signal value
S.P.	Set Point
MAX	Maximum speed limitation
PB	Proportional band
MIN	Minimum speed
PTF	MINIMUM working input value Set the lowest value possible to obtain the highest energy savings.
PTM	MAXIMUM working input value
DMF	Difference between PTM and PTF

The command changes to keep the prevalent input at Set Point (S.P.).
The action can be direct or reverse.

ECB REGULATOR EC BASIC

UNLOCK/ANTILOCK FUNCTION (SW1_10=OFF)

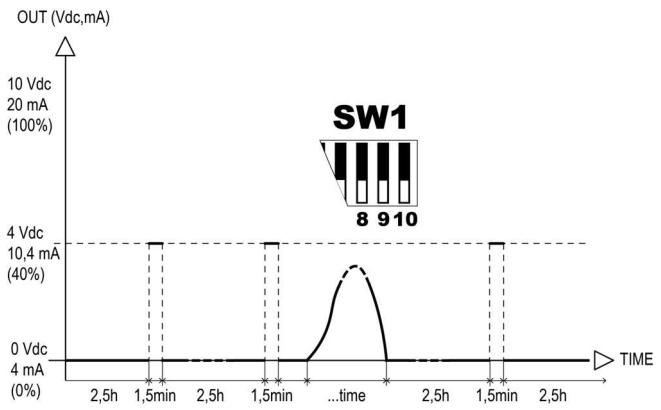

Label	Description
OUT	0-10 Vdc/4-20 mA output command value
TIME	Time axis

The Unlock/Antilock function allows, in compliance with the indications provided in the manuals of the main electronic fan manufacturers, the fans to be forced to rotate for 1.5 minutes at 40% speed if the fans have not been operated for 2.5 consecutive hours. Each time the fans are operated, or the controller is switched off or reset, the internal 2.5-hour timer is reset. Once the output forcing cycle at 40% of the command has started, the controller must be switched off or the function must be disabled by setting dip switch SW1_10 to ON in order to stop the fans. Any other operation has no effect on the forcing cycle.

N.B. Disabling the function during the forcing cycle does not reset the timer. If the function is re-enabled and the forcing cycle has not yet ended, the fans are forced again to 40% until the end of the overall 1.5 minutes. The timing values cannot be modified.

5. TRIMMER SETTINGS

5.1. Regulation limits

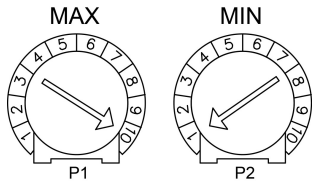

Trimmer	Label	Description
P1	**MAX**	Maximum speed limitation settings (see 3.7.2). It prevails over Minimum speed limitation
P2	**MIN**	Minimum speed settings (depends on SW1_6 status)

5.2. Proportional band and set-point settings

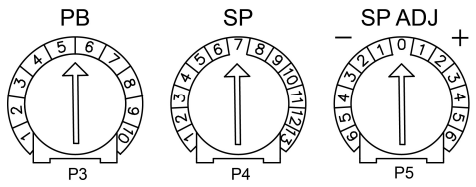

Trimmer	Label	Description
P3	**P.B.**	Proportional band settings (see point 5.5)
P4	**S.P.**	Set point settings (see point 5.3)
P5	**S.P. Adj**	Set point fine tuning settings (see point 5.3)

5.3. P4 (S.P.) Set-point and P5 (S.P.Adj) fine tuning

The set-point value is given by adding or subtracting S.P. Adj. with S.P. The set point is at the center of the proportional band.

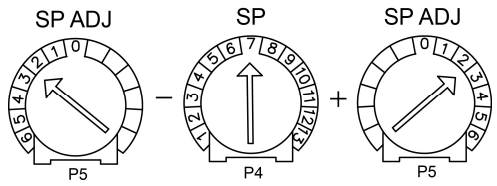

5.4. Range S.P. and S.P. Adj

5.4.1. Scale 0-10 Vdc

- S.P. Adj						Vdc		+ S.P. Adj					
-6	-5	-4	-3	-2	-1	SP		+1	+2	+3	+4	+5	+6
0.64	0.70	0.76	0.82	0.88	0.94	**1**	**1.00**	1.06	1.12	1.18	1.24	1.30	**1.36**
1.30	1.36	1.42	1.48	1.54	1.60	**2**	**1.66**	1.72	1.78	1.84	1.90	1.96	**2.02**
1.98	2.04	2.10	2.16	2.22	2.28	**3**	**2.34**	2.40	2.46	2.52	2.58	2.64	**2.70**
2.64	2.70	2.76	2.82	2.88	2.94	**4**	**3.00**	3.06	3.12	3.18	3.24	3.30	**3.36**
3.30	3.36	3.42	3.48	3.54	3.60	**5**	**3.66**	3.72	3.78	3.84	3.90	3.96	**4.02**
3.98	4.04	4.10	4.16	4.22	4.28	**6**	**4.34**	4.40	4.46	4.52	4.28	4.34	**4.40**
4.64	4.70	4.76	4.82	4.88	4.94	**7**	**5.00**	5.06	5.12	5.18	5.24	5.30	**5.36**
5.30	5.36	5.42	5.48	5.54	5.60	**8**	**5.66**	5.72	5.78	5.84	5.90	5.96	**6.02**
5.98	6.04	6.10	6.16	6.22	6.28	**9**	**6.34**	6.40	6.46	6.52	6.58	6.64	**6.70**
6.64	6.70	6.76	6.82	6.88	6.94	**10**	**7.00**	7.06	7.12	7.18	7.24	7.30	**7.36**
7.30	7.36	7.42	7.48	7.54	7.60	**11**	**7.66**	7.72	7.78	7.84	7.90	7.96	**8.02**
7.98	8.04	8.10	8.16	8.22	8.28	**12**	**8.34**	8.40	8.46	8.52	8.58	8.64	**8.70**
8.64	8.70	8.76	8.82	8.88	8.94	**13**	**9.00**	9.06	9.12	9.18	9.24	9.30	**9.36**

5.4.2. Scale 0-20 mA

- S.P. Adj						mA		+ S.P. Adj					
-6	-5	-4	-3	-2	-1	SP		+1	+2	+3	+4	+5	+6
5.4	5.5	5.6	5.7	5.8	5.9	**1**	**6**	6.1	6.2	6.3	6.4	6.5	**6.6**
6.4	6.5	6.6	6.7	6.8	6.9	**2**	**7**	7.1	7.2	7.3	7.4	7.5	**7.6**
7.4	7.5	7.6	7.7	7.8	7.9	**3**	**8**	8.1	8.2	8.3	8.4	8.5	**8.6**
8.4	8.5	8.6	8.7	8.8	8.9	**4**	**9**	9.1	9.2	9.3	9.4	9.5	**9.6**
9.4	9.5	9.6	9.7	9.8	9.9	**5**	**10**	10.1	10.2	10.3	10.4	10.5	**10.6**
10.4	10.5	10.6	10.7	10.8	10.9	**6**	**11**	11.1	11.2	11.3	11.4	11.5	**11.6**
11.4	11.5	11.6	11.7	11.8	11.9	**7**	**12**	12.1	12.2	12.3	12.4	12.5	**12.6**
12.4	12.5	12.6	12.7	12.8	12.9	**8**	**13**	13.1	13.2	13.3	13.4	13.5	**13.6**
13.4	13.5	13.6	13.7	13.8	13.9	**9**	**14**	14.1	14.2	14.3	14.4	14.5	**14.6**
14.4	14.5	14.6	14.7	14.8	14.9	**10**	**15**	15.1	15.2	15.3	15.4	15.5	**15.6**
15.4	15.5	15.6	15.7	15.8	15.9	**11**	**16**	16.1	16.2	16.3	16.4	16.5	**16.6**
16.4	16.5	16.6	16.7	16.8	16.9	**12**	**17**	17.1	17.2	17.3	17.4	17.5	**17.6**
17.4	17.5	17.6	17.7	17.8	17.9	**13**	**18**	18.1	18.2	18.3	18.4	18.5	**18.6**

5.4.3. Scale 0-5 Vdc

- S.P. Adj						Vdc		+ S.P. Adj					
-6	-5	-4	-3	-2	-1	SP		+1	+2	+3	+4	+5	+6
0.32	0.35	0.38	0.41	0.44	0.47	**1**	**0.50**	0.53	0.56	0.59	0.62	0.65	**0.68**
0.65	0.68	0.71	0.74	0.77	0.80	**2**	**0.83**	0.86	0.89	0.92	0.95	0.98	**1.01**
0.99	1.02	1.05	1.08	1.11	1.14	**3**	**1.17**	1.20	1.23	1.26	1.29	1.32	**1.35**
1.32	1.35	1.38	1.41	1.44	1.47	**4**	**1.50**	1.53	1.56	1.59	1.62	1.65	**1.68**
1.65	1.68	1.71	1.74	1.77	1.80	**5**	**1.83**	1.86	1.89	1.92	1.95	1.98	**2.01**
1.99	2.02	2.05	2.08	2.11	2.14	**6**	**2.17**	2.20	2.23	2.26	2.29	2.32	**2.35**
2.32	2.35	2.38	2.41	2.44	2.47	**7**	**2.50**	2.53	2.56	2.59	2.62	2.65	**2.68**
2.65	2.68	2.71	2.74	2.77	2.80	**8**	**2.83**	2.86	2.89	2.92	2.95	2.98	**3.01**
2.99	3.02	3.05	3.08	3.11	3.14	**9**	**3.17**	3.20	3.23	3.26	3.29	3.32	**3.35**
3.32	3.35	3.38	3.41	3.44	3.47	**10**	**3.50**	3.53	3.56	3.59	3.62	3.65	**3.68**
3.65	3.68	3.71	3.74	3.77	3.80	**11**	**3.83**	3.86	3.89	3.92	3.95	3.98	**4.01**
3.99	4.02	4.05	4.08	4.11	4.14	**12**	**4.17**	4.20	4.23	4.26	4.29	4.32	**4.35**
4.32	4.35	4.38	4.41	4.44	4.47	**13**	**4.50**	4.53	4.56	4.59	4.62	4.65	**4.68**

5.4.4. Scale 4-20 mA

- S.P. Adj						mA		+ S.P. Adj					
-6	-5	-4	-3	-2	-1	SP		+1	+2	+3	+4	+5	+6
5.4	5.5	5.6	5.7	5.8	5.9	**1**	**6**	6.1	6.2	6.3	6.4	6.5	**6.6**
6.4	6.5	6.6	6.7	6.8	6.9	**2**	**7**	7.1	7.2	7.3	7.4	7.5	**7.6**
7.4	7.5	7.6	7.7	7.8	7.9	**3**	**8**	8.1	8.2	8.3	8.4	8.5	**8.6**
8.4	8.5	8.6	8.7	8.8	8.9	**4**	**9**	9.1	9.2	9.3	9.4	9.5	**9.6**
9.4	9.5	9.6	9.7	9.8	9.9	**5**	**10**	10.1	10.2	10.3	10.4	10.5	**10.6**
10.4	10.5	10.6	10.7	10.8	10.9	**6**	**11**	11.1	11.2	11.3	11.4	11.5	**11.6**
11.4	11.5	11.6	11.7	11.8	11.9	**7**	**12**	12.1	12.2	12.3	12.4	12.5	**12.6**
12.4	12.5	12.6	12.7	12.8	12.9	**8**	**13**	13.1	13.2	13.3	13.4	13.5	**13.6**
13.4	13.5	13.6	13.7	13.8	13.9	**9**	**14**	14.1	14.2	14.3	14.4	14.5	**14.6**
14.4	14.5	14.6	14.7	14.8	14.9	**10**	**15**	15.1	15.2	15.3	15.4	15.5	**15.6**
15.4	15.5	15.6	15.7	15.8	15.9	**11**	**16**	16.1	16.2	16.3	16.4	16.5	**16.6**
16.4	16.5	16.6	16.7	16.8	16.9	**12**	**17**	17.1	17.2	17.3	17.4	17.5	**17.6**
17.4	17.5	17.6	17.7	17.8	17.9	**13**	**18**	18.1	18.2	18.3	18.4	18.5	**18.6**

5.4.5. Scale 0-15 bar

- S.P. Adj						bar		+ S.P. Adj					
-6	-5	-4	-3	-2	-1	SP		+1	+2	+3	+4	+5	+6
1.31	1.41	1.50	1.59	1.69	1.78	**1**	**1.88**	1.97	2.06	2.16	2.25	2.34	**2.44**
2.25	2.34	2.44	2.53	2.63	2.72	**2**	**2.81**	2.91	3.00	3.09	3.19	3.28	**3.38**
3.19	3.28	3.38	3.47	3.56	3.66	**3**	**3.75**	3.84	3.94	4.03	4.13	4.22	**4.31**
4.13	4.22	4.31	4.41	4.50	4.59	**4**	**4.69**	4.78	4.88	4.97	5.06	5.16	**5.25**
5.06	5.16	5.25	5.34	5.44	5.53	**5**	**5.63**	5.72	5.81	5.91	6.00	6.09	**6.19**
6.00	6.09	6.19	6.28	6.38	6.47	**6**	**6.56**	6.66	6.75	6.84	6.94	7.03	**7.13**
6.94	7.03	7.13	7.22	7.31	7.41	**7**	**7.50**	7.59	7.69	7.78	7.88	7.97	**8.06**
7.88	7.97	8.06	8.16	8.25	8.34	**8**	**8.44**	8.53	8.63	8.72	8.81	8.91	**9.00**
8.81	8.91	9.00	9.09	9.19	9.28	**9**	**9.38**	9.47	9.56	9.66	9.75	9.84	**9.94**
9.75	9.84	9.94	10.03	10.13	10.22	**10**	**10.31**	10.41	10.50	10.59	10.69	10.78	**10.88**
10.69	10.78	10.88	10.97	11.06	11.16	**11**	**11.25**	11.34	11.44	11.53	11.63	11.72	**11.81**
11.63	11.72	11.81	11.91	12.00	12.09	**12**	**12.19**	12.28	12.38	12.47	12.56	12.66	**12.75**
12.56	12.66	12.75	12.84	12.94	13.03	**13**	**13.13**	13.22	13.31	13.41	13.50	13.59	**13.69**

5.4.6. Scale 0-25 bar

- S.P. Adj						bar		+ S.P. Adj					
-6	-5	-4	-3	-2	-1	SP		+1	+2	+3	+4	+5	+6
2.19	2.34	2.50	2.66	2.81	2.97	**1**	**3.13**	3.28	3.44	3.59	3.75	3.91	**4.06**
3.75	3.91	4.06	4.22	4.38	4.53	**2**	**4.69**	4.84	5.00	5.16	5.31	5.47	**5.63**
5.31	5.47	5.63	5.78	5.94	6.09	**3**	**6.25**	6.41	6.56	6.72	6.88	7.03	**7.19**
6.88	7.03	7.19	7.34	7.50	7.66	**4**	**7.81**	7.97	8.13	8.28	8.44	8.59	**8.75**
8.44	8.59	8.75	8.91	9.06	9.22	**5**	**9.38**	9.53	9.69	9.84	10.00	10.16	**10.31**
10.00	10.16	10.31	10.47	10.63	10.78	**6**	**10.94**	11.09	11.25	11.41	11.56	11.72	**11.88**
11.56	11.72	11.88	12.03	12.19	12.34	**7**	**12.50**	12.66	12.81	12.97	13.13	13.28	**13.44**
13.13	13.28	13.44	13.59	13.75	13.91	**8**	**14.06**	14.22	14.38	14.53	14.69	14.84	**15.00**
14.69	14.84	15.00	15.16	15.31	15.47	**9**	**15.63**	15.78	15.94	16.09	16.25	16.41	**16.56**
16.25	16.41	16.56	16.72	16.88	17.03	**10**	**17.19**	17.34	17.50	17.66	17.81	17.97	**18.13**
17.81	17.97	18.13	18.28	18.44	18.59	**11**	**18.75**	18.91	19.06	19.22	19.38	19.53	**19.69**
19.38	19.53	19.69	19.84	20.00	20.16	**12**	**20.31**	20.47	20.63	20.78	20.94	21.09	**21.25**
20.94	21.09	21.25	21.41	21.56	21.72	**13**	**21.88**	22.03	22.19	22.34	22.50	22.66	**22.81**

5.4.7. Scale 0-30 bar

- S.P. Adj						bar		+ S.P. Adj					
-6	-5	-4	-3	-2	-1	SP		+1	+2	+3	+4	+5	+6
2.63	2.81	3.00	3.19	3.38	3.56	**1**	**3.75**	3.94	4.13	4.31	4.50	4.69	**4.88**
4.50	4.69	4.88	5.06	5.25	5.44	**2**	**5.63**	5.81	6.00	6.19	6.38	6.56	**6.75**
6.38	6.56	6.75	6.94	7.13	7.31	**3**	**7.50**	7.69	7.88	8.06	8.25	8.44	**8.63**
8.25	8.44	8.63	8.81	9.00	9.19	**4**	**9.38**	9.56	9.75	9.94	10.13	10.31	**10.50**
10.13	10.31	10.50	10.69	10.88	11.06	**5**	**11.25**	11.44	11.63	11.81	12.00	12.19	**12.38**
12.00	12.19	12.38	12.56	12.75	12.94	**6**	**13.13**	13.31	13.50	13.69	13.88	14.06	**14.25**
13.88	14.06	14.25	14.44	14.63	14.81	**7**	**15.00**	15.19	15.38	15.56	15.75	15.94	**16.13**
15.75	15.94	16.13	16.31	16.50	16.69	**8**	**16.88**	17.06	17.25	17.44	17.63	17.81	**18.00**
17.63	17.81	18.00	18.19	18.38	18.56	**9**	**18.75**	18.94	19.13	19.31	19.50	19.69	**19.88**
19.50	19.69	19.88	20.06	20.25	20.44	**10**	**20.63**	20.81	21.00	21.19	21.38	21.56	**21.75**
21.38	21.56	21.75	21.94	22.13	22.31	**11**	**22.50**	22.69	22.88	23.06	23.25	23.44	**23.63**
23.25	23.44	23.63	23.81	24.00	24.19	**12**	**24.38**	24.56	24.75	24.94	25.13	25.31	**25.50**
25.13	25.31	25.50	25.69	25.88	26.06	**13**	**26.25**	26.44	26.63	26.81	27.00	27.19	**27.38**

5.4.8. Scale 0-45 bar

- S.P. Adj						bar		+ S.P. Adj					
-6	-5	-4	-3	-2	-1	SP		+1	+2	+3	+4	+5	+6
3.94	4.22	4.50	4.78	5.06	5.34	**1**	**5.63**	5.91	6.19	6.47	6.75	7.03	**7.31**
6.75	7.03	7.31	7.59	7.88	8.16	**2**	**8.44**	8.72	9.00	9.28	9.56	9.84	**10.13**
9.56	9.84	10.13	10.41	10.69	10.97	**3**	**11.25**	11.53	11.81	12.09	12.38	12.66	**12.94**
12.38	12.66	12.94	13.22	13.50	13.78	**4**	**14.06**	14.34	14.63	14.91	15.19	15.47	**15.75**
15.19	15.47	15.75	16.03	16.31	16.59	**5**	**16.88**	17.16	17.44	17.72	18.00	18.28	**18.56**
18.00	18.28	18.56	18.84	19.13	19.41	**6**	**19.69**	19.97	20.25	20.53	20.81	21.09	**21.38**
20.81	21.09	21.38	21.66	21.94	22.22	**7**	**22.50**	22.78	23.06	23.34	23.63	23.91	**24.19**
23.63	23.91	24.19	24.47	24.75	25.03	**8**	**25.31**	25.59	25.88	26.16	26.44	26.72	**27.00**
26.44	26.72	27.00	27.28	27.56	27.84	**9**	**28.13**	28.41	28.69	28.97	29.25	29.53	**29.81**
29.25	29.53	29.81	30.09	30.38	30.66	**10**	**30.94**	31.22	31.50	31.78	32.06	32.34	**32.63**
32.06	32.34	32.63	32.91	33.19	33.47	**11**	**33.75**	34.03	34.31	34.59	34.88	35.16	**35.44**
34.88	35.16	35.44	35.72	36.00	36.28	**12**	**36.56**	36.84	37.13	37.41	37.69	37.97	**38.25**
37.69	37.97	38.25	38.53	38.81	39.09	**13**	**39.38**	39.66	39.94	40.22	40.50	40.78	**41.06**

5.4.9. Scale NTC 10-60 °C

- S.P. Adj						°C		+ S.P. Adj					
-6	-5	-4	-3	-2	-1	SP		+1	+2	+3	+4	+5	+6
2.0	2.5	3.0	3.5	4.0	4.5	**1**	**5.0**	5.5	6.0	6.5	7.0	7.5	**8.0**
7.0	7.5	8.0	8.5	9.0	9.5	**2**	**10.0**	10.5	11.0	11.5	12.0	12.5	**13.0**
12.0	12.5	13.0	13.5	14.0	14.5	**3**	**15.0**	15.5	16.0	16.5	17.0	17.5	**18.0**
17.0	17.5	18.0	18.5	19.0	19.5	**4**	**20.0**	20.5	21.0	21.5	22.0	22.5	**23.0**
22.0	22.5	23.0	23.5	24.0	24.5	**5**	**25.0**	25.5	26.0	26.5	27.0	27.5	**28.0**
27.0	27.5	28.0	28.5	29.0	29.5	**6**	**30.0**	30.5	31.0	31.5	32.0	32.5	**33.0**
32.0	32.5	33.0	33.5	34.0	34.5	**7**	**35.0**	35.5	36.0	36.5	37.0	37.5	**38.0**
37.0	37.5	38.0	38.5	39.0	39.5	**8**	**40.0**	40.5	41.0	41.5	42.0	42.5	**43.0**
42.0	42.5	43.0	43.5	44.0	44.5	**9**	**45.0**	45.5	46.0	46.5	47.0	47.5	**48.0**
47.0	47.5	48.0	48.5	49.0	49.5	**10**	**50.0**	50.5	51.0	51.5	52.0	52.5	**53.0**
52.0	52.5	53.0	53.5	54.0	54.5	**11**	**55.0**	55.5	56.0	56.5	57.0	57.5	**58.0**
57.0	57.5	58.0	58.5	59.0	59.5	**12**	**60.0**	60.5	61.0	61.5	62.0	62.5	**63.0**
62.0	62.5	63.0	63.5	64.0	64.5	**13**	**65.0**	65.5	66.0	66.5	67.0	67.5	**68.0**

5.5. P3 (P.B.) proportional band

Proportional band based on position

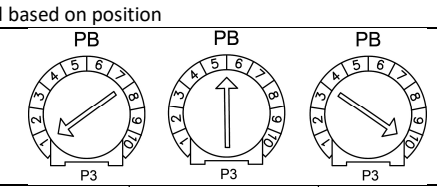

Scale	Position 1	Position 5-6	Position 10
0-10 Vdc	0.7 Vdc	1.3 Vdc	1.9 Vdc
0-20 mA	1.3 mA	2.5 mA	3.7 mA
0-5 Vdc	0.35 Vdc	0.65 Vdc	0.95 Vdc
4-20 mA	1.3 mA	2.5 mA	3.7 mA
0-15 bar	1.3 bar	2.4 bar	3.6 bar
0-25 bar	2.2 bar	4.1 bar	5.9 bar
0-30 bar	2.6 bar	4.9 bar	7.1 bar
0-45 bar	3.9 bar	7.3 bar	10.7 bar
10-60 °C	4.0 °C	7.0 °C	10.0 °C

5.6. S.P. and P.B. settings example

If the set-point is set to 18 bar with 4.9 bar band, the three regulation trimmers must be set as follows:

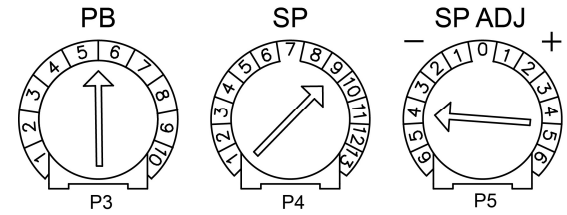

6. SIGNALS

6.1. Led

Base board

LED	COLOR	LABEL	DESCRIPTION
DL1	GREEN	POWER	Power on (light on)
DL2	GREEN	CPU RUN	Microprocessor running (blinking light)
DL3	RED	FAIL	Fault alarm (blinking light) (see point 6.2)
DL4	YELLOW	UNDER SP	Prevalent input under S.P. (*)
DL5	YELLOW	OVER SP	Prevalent input over S.P. (*)
DL6	YELLOW	% OUT	Output command (light on) (**)
DL7	GREEN	-	RL1 relay excited (light on)

(*) If the input is out of P.B., the light is on. The closer to S.P., the faster it blinks. Al S.P., DL4 and DL5 blink simultaneously.

(**) Intensity increases as the output value increases.

Optional plug

LED	COLOR	LABEL	DESCRIPTION
DL1	GREEN	-	S.P.1 + S.P.1 ADJ on (light on)
DL2	GREEN	-	S.P.2 + S.P.2 ADJ on (light on)

6.2. Alarm blink code (DL4) in order of priority

NR. BLINKS	DESCRIPTION
1	Input signal under range The transducer input signal is too low. - Check whether the transducer(s) is correctly connected; - Check whether the transducer(s) operates correctly; - Check whether the configuration is correct.
2	Input signal over range The transducer input signal is too high: - Check whether the transducer(s) is correctly connected; - Check whether the transducer(s) operates correctly; - Check whether the configuration is correct.
3	Incorrect configuration of SW1 DIP switches - Check that SW1_9 is OFF in NTC or 0–5 Vdc configuration. - Check that SW1_1, SW1_2 and SW1_3 are set to a valid configuration (see section 3.6).
4	Internal memory damaged - Internal microprocessor error, irreparable by the user.

ECB REGULATOR EC BASIC

7. TECHNICAL SPECIFICATIONS

Power supply:
Voltage:
20-24 Vac (±10%)
230 Vac (±10%)
400 Vac (±10%)
Other voltages upon request

Frequency: 50/60 Hz automatic frequency recognition
Absorbed power: 5 V A

Input signals and contacts:
Analog:
0-5/0-10 Vdc (Ri = 10 kΩ),
4-20 mA (Ri = 100 Ω)
NTC 10 kΩ @ 25°C

"ON-OFF" contacts: (see point 3.2.3)

Output signals and contacts:
Auxiliary power:
20 Vdc (±20%), ≤ 40 mA not stabilized and protected against short circuit
5.0 Vdc/10.0 Vdc (±1.0%), ≤ 10 mA protected against short circuit
Analog output:
0-10 Vdc, ≤ 15 mA
0-20 mA ≤
RL1 relay: COM, NC, NO contacts for alarm
3 A @ 250 Vac – 3 A @ 30 Vdc

Alarms:
Command input:
0-5 Vdc: Vin ≤ 5,5 Vdc;
4-20 mA: 2 mA ≤ Iin ≤ 24 mA;
NTC in the event of cut off (or T < 0 °C) and short circuit (or T > 85 °C)
Command and signal devices:
Trimmer: No. 5 regulation trimmers (see points 5.1 and 5.2)
Dip-Switch: No. 10 configuration Dip-Switches (see point 3.6)
Led: No. 7 signal LED (see point 6.1)

Protections:
Surge: As per EN 61000-4-5: surge category II
(4 kV) (only with voltage ≥ 230 Vac)
Auxiliary power: with PTC sensor for short circuit protection

Container (IP55 only):
Materials: GW-PLAST 75 (temperature < 85 °C)
Pollution: for high pollution using the wire clamp kit
Fire resistance: category D

Insulation:
Container: class I (use of grounded PE protection cond.)
Command: 4000 Vac between command input and mains
(only with voltages ≥ 230 Vac)

Working conditions:
Working temperature: from -20 °C to 50 °C; use Start/Stop contact if T ≤ -10 °C
Storage temperature: from -30 °C to 85 °C
Humidity: from 0% to 85% non-condensing relative humidity
Vibrations: ≤ 1 g (9.8 m/s²)

8. SHORT CIRCUIT PROTECTION

A short circuit and/or overload device must be installed upstream from the ECB100 regulator; this protection must be supplied by the installer and can be made up of:

- A 500 mA fuse (two for voltages ≥ 230 Vac).

The use of these protections safeguard regulation device electrical integrity.

SURGE ARRESTER:
Electrical protection inserted between the regulator power supply and grounding, that protects the device from transitory power surges up to 480 Vac.

MANUFACTURER'S DECLARATION
This instrument was designed and constructed for use in Industrial environments and meets the following community directives:

- Machinery Directive 2006/42/EU as amended
- Low Voltage Directive 2006/95/EU and 93/68/EU
- EMC 2004/108/EU directive as amended

9. COMMUNITY DIRECTIVES AND TECHNICAL STANDARDS

The essential directive requirements are met by compliance with "generic standards" for the industrial environment.

9.1 CE – Declaration of conformity

Directive	CE standard code	Version
EMC 2014/30/UE	EN IEC 61800-3 EN IEC 61000-6-2 EN 61000-6-3 EN IEC 55014-1 EN IEC 55014-1	2018 2019 2007 +A1:2011 2021 2021
Safety 2014/35/UE	EN 61800-5-1 EN 60335-1 EN 60730-1	2007 +A1:2017 +A11:2021 2012 +A13:2017 +A2:2019 2017
RoHS	EN 50581	2012

9.2 UK – Declaration of conformity

Subject	Name	Version
EMC	BS EN IEC 61800-3 BS EN IEC 61000-6-2 BS EN 61000-6-3 BS EN IEC 55014-1 BS EN IEC 55014-1	2018 2019 2007 +A1:2011 2021 2021
Safety	BS EN 61800-5-1 BS EN 60335-1 BS EN 60730-1	2007 +A1:2017 +A11:2021 2012 +A13:2017 +A2:2019 2017
RoHS	BS EN 50581	2012

The instrument must be disposed of according to local electric and electronic device disposal regulations.