DRV 3~

User Manual



The Original ALL-in-1 for Ventilated Exchangers
3 YEARS Warranty

Vac stepless controller

for

3-Phase asynchronous motors

for Axial & Centrifugal Fans

SELPRO
Fan Speed Controllers Specialist

WARNING !

HIGH LEAKAGE CURRENT: first connect to earth !

The DRV300 is a voltage regulator for three phase motors which operates connected to the three phase mains voltage.
The regulator must be installed by qualified personnel who will connect the electric supply, attach the cables in their permanent positions and commission the plant.
Incorrect installation of the DRV300 voltage regulator or the fan connected to it may cause damage to objects or people so ensure the instructions in this manual and all required security measures are read and followed carefully.

- **When receiving the goods, check that the packing is intact; in the event of any damage due to transportation, notify the forwarding agent according to legal requirements.**
- **The DRV series of products shown in this manual has been manufactured to the highest standards.**
- **The manufacturer declines all responsibility for accident, loss or damage caused by the use of these appliances. These must be correctly installed by qualified personnel in conformity with their destined use and, whenever needed, must undergo correct maintenance which should be carried out while ensuring the safety of people, domestic animals and goods.**
- **The purchaser must previously ascertain the suitability of the product for the use it is intended for and assume all consequent risks and responsibility.**
- **The DRV300 is a mains voltage regulator which uses the phase-cut principle completely controlled over the three phases. It has been designed to vary the effective voltage on three phase asynchronous motors for fans following a control signal (either Ma or VDC). The appliance is manufactured for industrial use and therefore meets the EMC standards that relate to industrial environments.**
- **Using the appliance for purposes other than the ones described above will be considered incorrect. In particular, the appliance may NOT be used to supply machine tools or any other machines where the motor torque-speed characteristic is not quadratic.**
- **If the equipment is intended for civil, commercial and/or light industrial use, supplementary components and other types of equipment are required which can be supplied on specific request from the purchaser. In this case, the purchaser must provide a suitable design of the plant in which the appliance is to be installed (compliant with EN 60555 - 2/3 standards regarding disturbance produced by electrical household appliances and the like.**

- **We decline all responsibility for any errors in the catalogues, publications or other written documents. The information in this manual is not binding and we reserve the right to make changes to the products without prior notice, at any time and in any way that we deem convenient for production purposes or useful for increasing functionality and performance.**

SAFETY RULES!

This unit has been designed to provide optimum operation provided that it is used and installed with care, in a suitable electrical environment, by qualified personnel.
When installing the regulator, **pay attention** to the following:

- **Follow the instructions in this manual exactly and observe all safety measures in force.**
- **Do NOT tamper with or disassemble the regulator's internal components; doing so will INVALIDATE THE GUARANTEE and may cause unnecessary damage.**
- **The regulator does not contain components that can be repaired by the user.**
- The regulator must be suitably and effectively earthed by the installer according to the standards in force; earthing is essential for the **EMC** filter to operate correctly.
- The user must be protected from the electric supply and the motor must be protected from possible overloads in compliance with the standards in force.
- When using RCDs, use industrial components ≥ 100mA
- **DO NOT** touch the electrical parts of the circuit when the power supply is connected under any circumstances.
- Before supplying power to the unit, check carefully that the power and earth are correctly connected.
- If the mains supply is "disturbed", which may be due to other electrical power components causing irregularities in the supply (power contactors), it is recommended that supplementary three phase **'SURGE ARRESTER'** filters are installed directly on the regulator supply.
- Avoid repeatedly connecting and disconnecting the power supply to the regulator; a constant supply keeps the regulator at working temperature and eliminates problems caused by condensate inside the protection case.
- Alternatively, use the remote terminal board contact S/S = ON/OFF.
- The S/S = ON/OFF contact on the terminal card does not cut the mains supply and therefore cannot be used as a safety switch.
- Install the regulator out of direct sunlight so that the container cannot get overheated and cause a reduction in the maximum load current.
- The appliance may operate at environmental temperatures up to **50°C**. Do not install it where this temperature may be exceeded or the integrity of the regulator will be compromised and the appliance may make the user appliance operate at full load (**100%**) with all consequent effects.
- The appliance must be stood vertically to encourage heat dissipation and to ensure there is a sufficient air circulation and free space measuring **150 mm** above and below the regulator. If several regulators are to be grouped together on a single electric board, provide forced air circulation with a fan or cooling unit of sufficient power.
- Use the holes on the lower and power terminal board sides of the appliance, for entrance of the connection cables. This will prevent water, dust etc. from getting in and will ensure the **IP55** protection level is maintained using adequately sized cables and sheaths of suitable quality.
- **DO NOT alter or damage the identification stickers on the equipment.**
- **DO NOT drill additional holes on the sides or above the regulator, in addition to those already provided**
- **DO NOT modify the trimmers with the red paint dot under any circumstances.**

WARNING !

HIGH LEAKAGE CURRENT: first connect to earth !

CONTENTS

1.0	Presentation		**5**
	1.1	Description	**8**
	1.2	Installation and machanical dimensions	**9**
	1.3	Principle of operation	**10**
		1.3.1 Operating Mode	**11**
		1.3.2 Application	**11**
	1.4	Electric motors	**12**
		1.4.1 Magnetothermal protection	**12**
	1.5	DRV300 technical characteristics	**13**
2.0	Electrical connections		**14**
	2.1	Power Card	**14**
	2.2	analogue input signals	**15**
		2.2.1 Remote 0-10 Vdc input	**15**
		2.2.2 Remote PWM modulating input (PPM-TRIAC)	**16**
		2.2.3 Auxiliary (S/S) ON-OFF contact	**17**
3.0	TRIMMER working VAC limit		**18**
	3.1	MAX output VAC limit	**18**
	3.2	MIN output VAC limit	**18**
	3.3	CUT-OFF VAC limit (VAC switch OFF)	**19**
4.0	Trouble shooting		**21**
5.0	Regulation accessories		**22**
(*)	Technical Assistance Sheet		**26**

Description for extra labels

! ATTENTION !

Information

Compliance to :
CE mark – Emission Elektromagnetik – Low-Voltage

Compliance to :
UKCA standard

Factory Default — Evidence for Factory STANDARD default

PRODUCT end of life – WEEE directive

1.0 Presentation

Thank you for choosing an **DRV300** series three phase voltage regulator designed specifically to give the maximum yield and greatest ease of use.
Like all our products, it has been built to the very highest quality standards using electronic components of the utmost reliability which have undergone functional tests that guarantee use of the product for at least **60,000 hours** of continuous operation without problem.

The **DRV300** regulator is a power unit designed to meet requirements of quality and flexibility of use in plants and machines in which proportional variation of the speed of rotation of the fans is essential.
In the **STANDARD version,** it is supplied in a plastic case made of **GW Plast® 120°C** (**fig. 1**), which in addition to guaranteeing high heat resistance in ordinary service (**120°C**) and increased mechanical resistance to impacts (**degree IK = 08**), thanks to the **IP55** degree of protection, also allows installation directly in an outdoor environment.

Fig**. 1** shows the **DRV300 regulator** IP55 **version** closed and open.

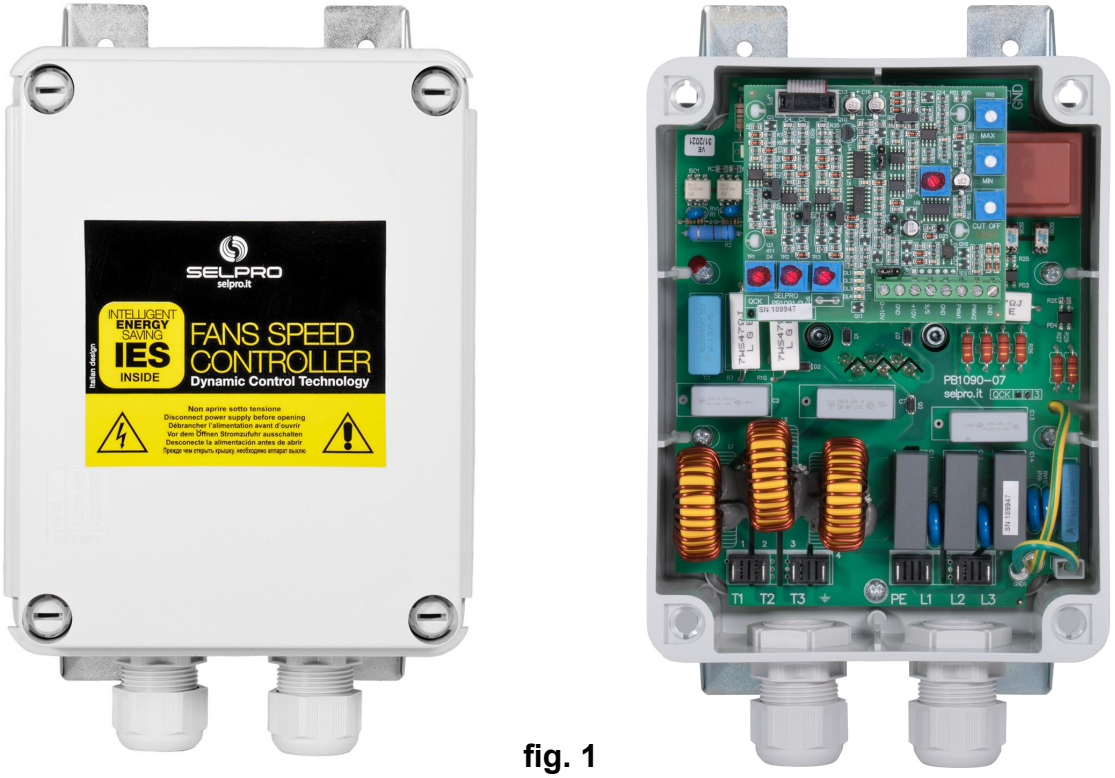

fig. 1

Before installing the **DRV300**, you are invited to read this manual which describes the necessary procedures for correct installation and commissioning of the machine

DRV300

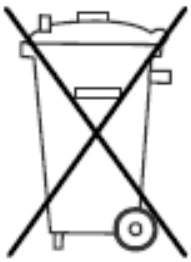

Disposal of the PRODUCT

The device must be collected separately in accordance with applicable local disposal regulations

This series has been designed and built for use on board machines for the industrial environment and complies with the following Community directives:

- Low Voltage Directive (LVD) 2014/35/EU
- Electromagnetic Compatibility (EMC) Directive 2014/30/EU

Thanks to the electronic technology solutions used, the equipment fully complies with the EMC emission limits required also in the civil sector by Directive **2014/30/EU.**
The essential requirements of the directive are met by compliance with the requirements of the "**generic-standards**" for industrial environments.

Directive	CE Norm	Version	Directive	UKCA Norm	Diretcive
EMC 2014/30/UE	EN IEC 61800-3 EN IEC 61000-6-2 EN 61000-6-3 EN IEC 55014-1 EN IEC 55014-1	2018 2019 2007 +A1:2011 2021 2021	EMC	BS EN IEC 61800-3 BS EN IEC 61000-6-2 BS EN 61000-6-3 BS EN IEC 55014-1 BS EN IEC 55014-1	2018 2019 2007 +A1:2011 2021 2021
Safety 2014/35/UE	EN 61800-5-1 EN 60335-1 EN 60730-1	2007 +A1:2017 +A11:2021 2012 +A13:2017 +A2:2019 2017	Safety	BS EN 61800-5-1 BS EN 60335-1 BS EN 60730-1	2007 +A1:2017 +A11:2021 2012 +A13:2017 +A2:2019 2017
RoHS	EN 50581	2012	RoHS	BS EN 50581	2012

The tests and conformity checks were carried out in the manner described in the technical product file.
Since these products are not only for "**stand alone**" use, but are also incorporated into other plants or machines, compliance with the standards has been verified under typical conditions of use.
In particular, a system consisting of a **DRV300** voltage regulator, a control cable and related controls, a power cable, a motor cable and a group of fans with a power equivalent to the value of the regulator's nameplate current, set stably at the VAC voltage values critical for single-phase regulation in the EMC field, was used.

! ATTENTION !

The responsibility for the final characteristics of the system or plant in relation to the EMC directive, is in any case the responsibility of the installer who must carefully carry out the installation, in compliance with the regulations in force, also using the information contained in this manual

Reference EMC compliance, as part of the CE Marking

The CDM System is for the Regulator only

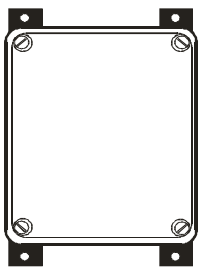

Complete Drive Module

The PDS System is for the Regulator + Fan(s)

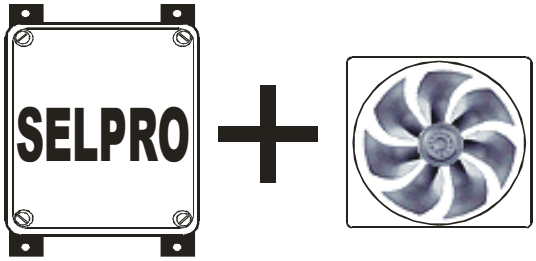

Power Drive System

Fig. 3 represent the **DRV300** regulator, with the general contents

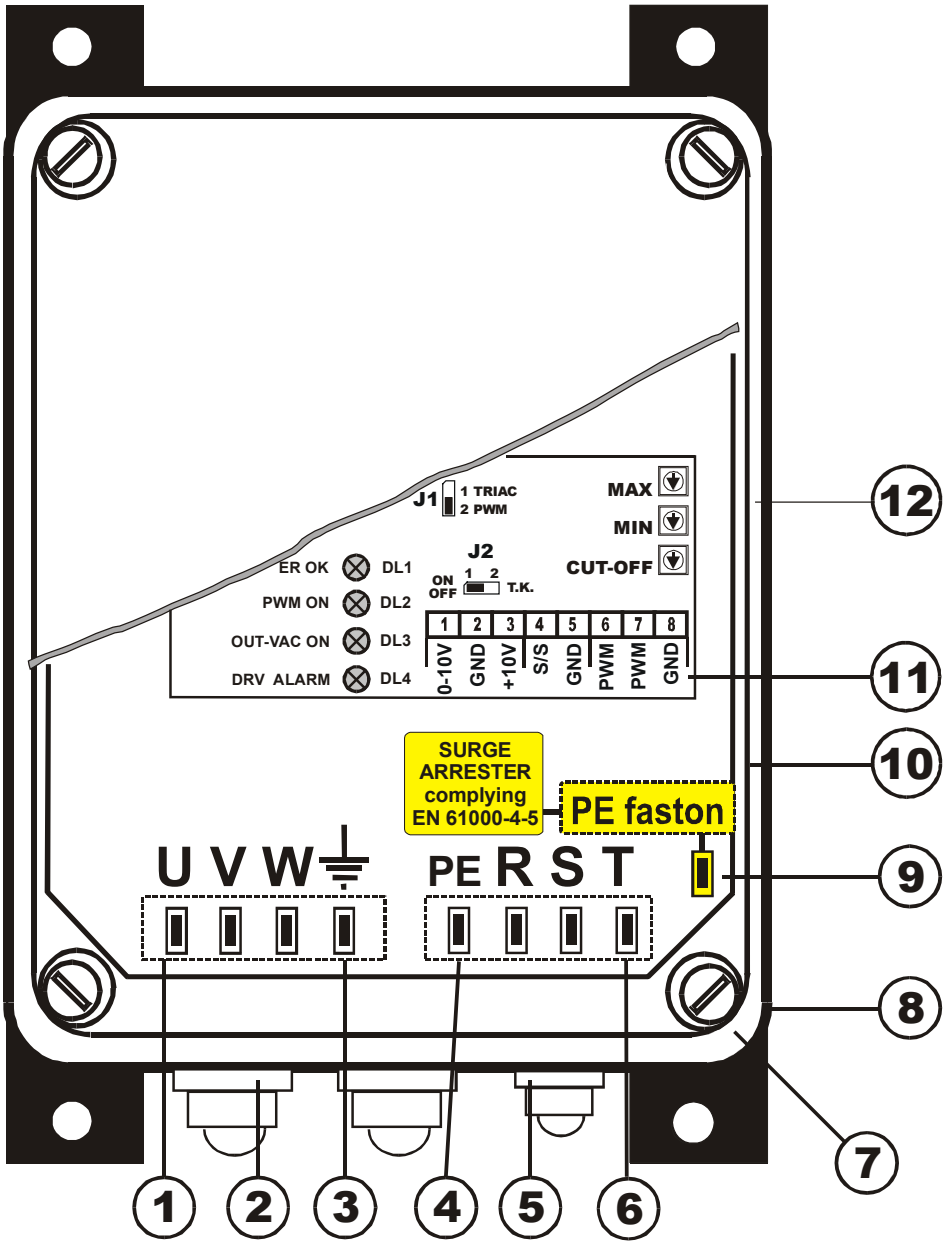

fig. 3

CONTENTS of DRV308 regulator

1	Terminal block for FANs connection (**U-V-W**)
2	Holes 2x ∅20 for connecting cables
3	Terminal block for **PE FANs** connection
4	Terminal block for **PE Power Supply** connection
5	Holes 2x ∅12 for connecting cables
6	Terminal block for Power Supply connection (**R-S-T**)

7	Cover screws **TPN** (**CEI 23-58**) max. **2,5** Nm
8	Screws hole for wall installation
9	SURGE ARRESTER circuit **EN 61000-4-5** compliance
10	Power card (lower)
11	Terminal block for analog inputs
12	**GW Plast ® 120°C** case

1.1 DESCRIPTION

The **DRV300** series three-phase cutting regulators comprises two electronic cards on a vetronite support mounted inside the case.
The two cards represent the **control** section (upper) and **power** section (lower).

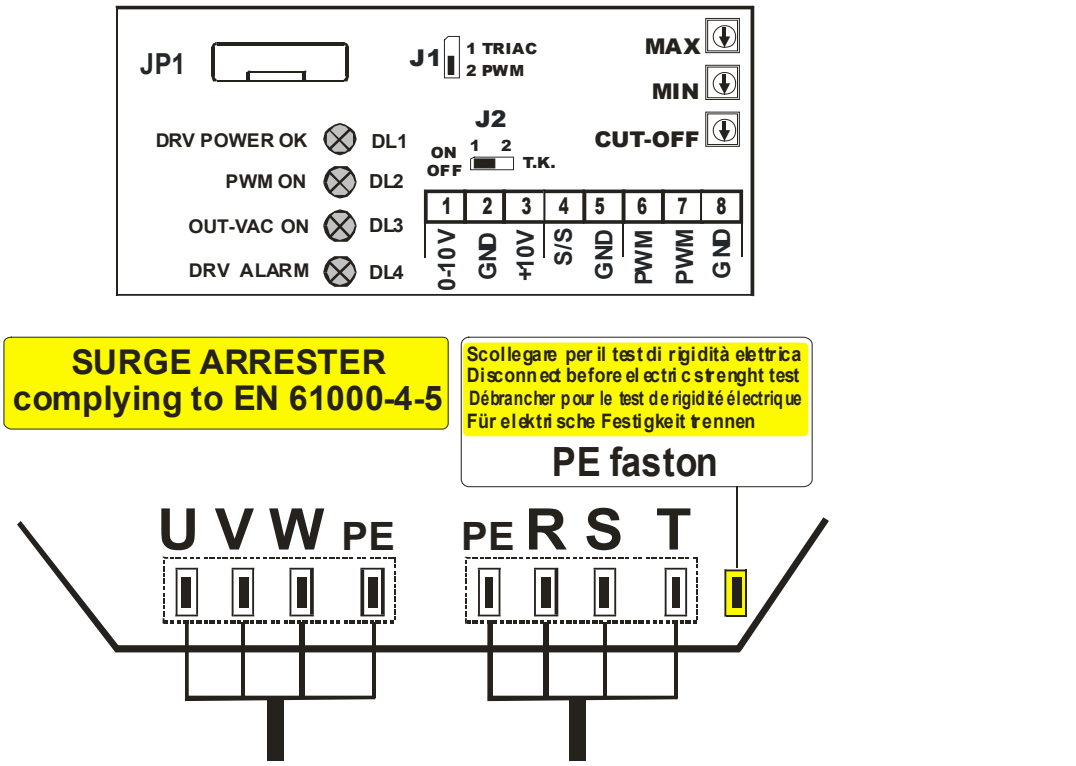

fig. 4

The **control card** contains the following regulation, connection, calibration and signalling components:

Leds : **SUPPLY O.K. (DL1)** **PWM (DL2)** **VAC-OUT ON (DL3)** **ALARM (DL4)**	Marked **DL1, DL2, DL3** and **DL4**: **GREEN Led** to signal "DRV supply O.K." **GREEN Led** to signal "PWM ON" **GREEN Led** to signal that the VAC output to load is STARTED **RED Led** to signal : "regulator fault / Alarm " for Phase OUT, LOW supply VAC (under 350 VAC), DRV OUT of order
Jumper J1 **J2**	**ON1: TRIAC** pulse mode **ON2: PWM zero-cross** mode **ON1:** S/S for remote ON/OFF (N.O.) **ON2:** S/S for T.K. fan (N.C.)
trimmer	MAX – MIN – CUT/OFF indicated to set the VAC working limit
flat cable	Marked **'JP1'** The flat allows connection to the control and power cards. **Check the flat is securely fixed during maintenance or commissioning**.
M1 terminal block	for remote 0-10Vdc control signal
M2 terminal block	for PWM modulation (PPM-Triac extended V-range : 5V to 30V)

The **power card** contains the following connection components:

Power supply terminal block	**R, S, T** for three-phase input POWER supply **U, V, W** for three-phase output FANs supply **PE** for the **Earth** connection

1.2 INSTALLATION AND MECHANICAL DIMENSIONS

The **DRV300** regulator must always be securely assembled and fixed using the four (**4**) attachment screws on the side fins before connecting to the power supply.
The regulator is cooled by natural convection and so air must be able to pass freely below and above the appliance.
Therefore ensure there is at least **150 mm** of free space above and below the regulator.
The **DRV300** series are available in **IP55 & IP20 & IP00** cases :

IP55 available for all the range

The appliance is housed in sturdy case, which is manufactured in **GWPlast 120°C** with aluminium supports; these provide high resistance to heat (**120°C**) and impact resistance (**IK = 08**), and have an **IP55** degree of protection, therefore can be directly installed outdoor.
The holes provided on the lower part of the regulator are for entry of the electric connection cables:

- four pole line (**three phase + Earth**) to power the regulator,
- four pole line (**three phase + Earth**) to power the load,
- signal cable lines for the analogue inputs and digital outputs.

To make installation simpler, all regulators are also fitted with stuffing boxes in **PA6** polyamide, class **V2**, **IP68**, for use with the power and signal cables

Mechanical Dimensions

DRV308

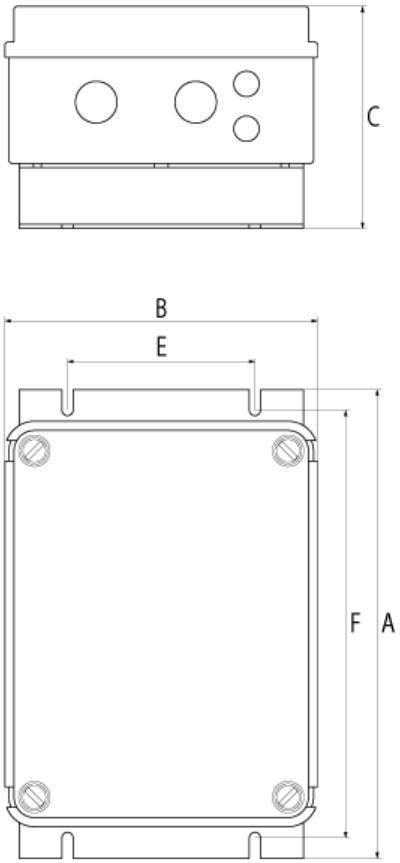

2 X M20
Ø MIN 6
Ø MAX 13
IP 68

2 X M12
Ø MIN 3
Ø MAX 7
IP 68

WEIGHT
1,7 Kg
FIX HOLES
Ø 5,5 mm

		mm				
MODEL	IP	A	B	C	E	F
DRV308	55	230	152	111	93	210

1.3 PRINCIPLE OF OPERATION

The **DRV300** series appliances are voltage regulators that use the phase cutting principle totally controlled over three phases.
The regulators, also referred to as speed controls, have been designed to change the average voltage on the following types of equipment, according to a control signal:

- asynchronous three phase motors connected to **fans, pumps, agitators, mixers**;
- electrical resistor devices with sectioned **single / three phase**.

Regulation occurs as a result of cutting of the input sinusoid. Regulation does not generate any torque knock or pulsation and is particularly quiet. Any voltage loss is contained within a maximum limit of **1%**.
Fig. 6 shows a block diagram of regulator **DRV300**.

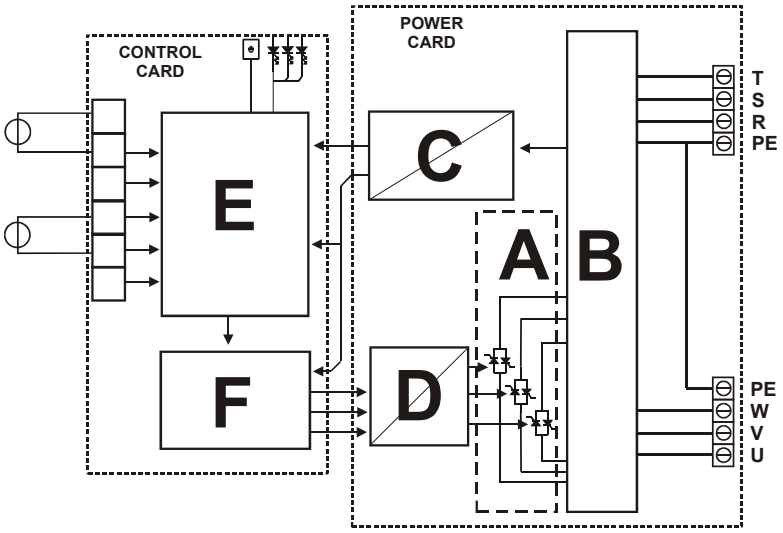

A - Power circuit
B - Mains filter and EMC protective devices
C - Power supply and synchronism signals
D - Insulators for the control signals of the power devices
E - Regulation and control circuit
F – Modulator for control of the power devices

fig. 6

The speed regulators are sized to withstand a starting current equal to more than 3 the rated current; therefore, when choosing a regulator, it is essential to take into consideration both the motor starting current and the type of motor.
It is actually well-known that, while the starting current in axial fans is equal to 2 or 3 times the rated current, the same current in centrifugal fans can have values around 7 or 8 times the rated current.
As far as the choice of motor is concerned, it is advisable to choose motors suited to the type of regulation.
As a general rule, the best suited are:

- **motors with high slipping resistive motors**
- **defluxed motors**
- **tropicalised motors**
- **CLASS H motors**

as these allow better performance to be obtained with speed changes, they are quieter and start with lower current.

When choosing a motor, it is always advisable to contact your own supplier and order a motor which is suitable for speed control by voltage change. Subsequently, practical trials should be carried out on the motors or prototype machines in order to check their correct operation.

After choosing the motor, the speed regulator must be ordered according to

- the **rated voltage**,
- **maximum power** required (load-Amperes) bearing in mind the **starting current**.

After the motor characteristics have been checked, the following should be defined in order to identify the type of operating mode and application.

1.3.1 Operating mode

The **DRV** controls allow two different types of operation, depending on which type of input are used :

- **with 0-10 Vdc input signal**
- **with PWM input signal (PPM / Triac)**

In any case, the **DRV300** is controlled by an external **MASTER** regulator which decides the phase cutting of the voltage by sending the **Vdc/PWM** control signal to the **DRV300**.

ATTENTION : For **Vdc** input, do not place power cables with signal cables in the same raceway; if the cables cross one another, ensure it is at 90°.

1.3.2 Application

It is generally possible to connect one control signal (**0-10 Vdc / PWM**) to **'DRV300'** regulator.
The principal applications are with remote control unit for measuring pressure (**bar**), temperature (**°C**), humidity (**%RH**), delivery (**cu.m/h**), superpressure (**mm.**), static pressure (**Pa**), supertemperature (**destratification**) etc. in plants and machines for Air-Conditioning, Refrigeration and Clean-Room.
After the setting of the VAC limits (MAX & MIN or CUT-OFF) the controller it's ready to start the VAC regulation between the setted VAC limit.

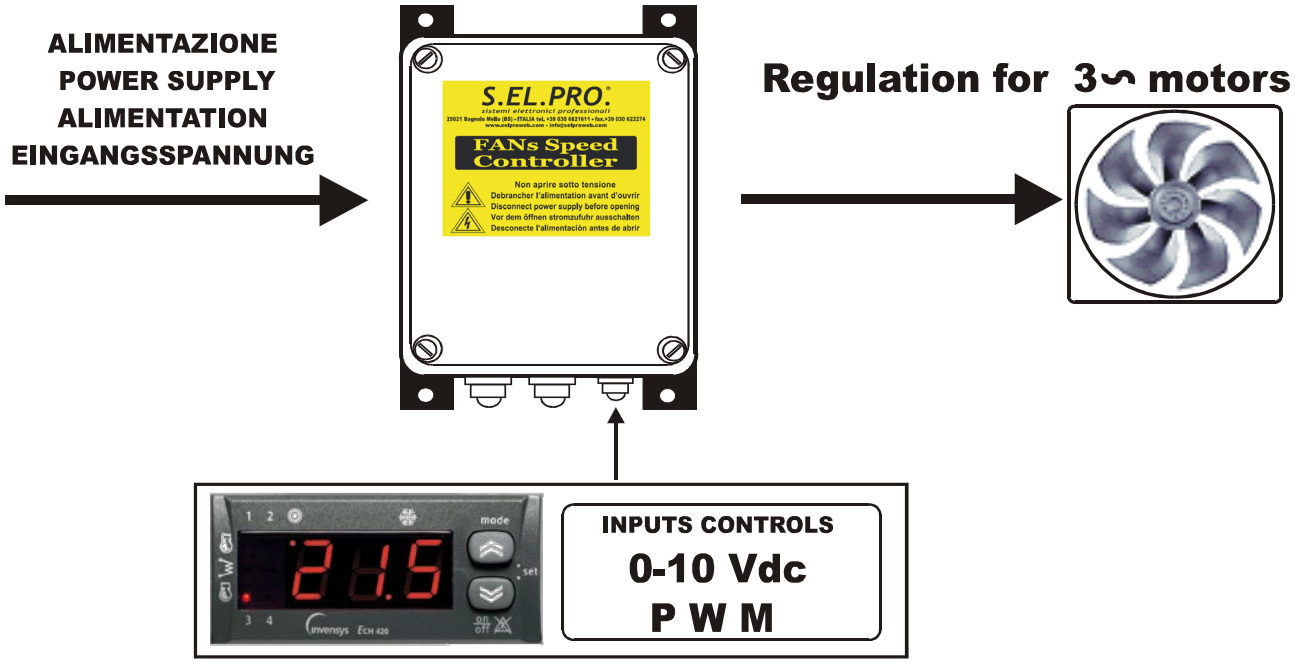

fig. 7

1.4 ELECTRIC MOTORS

Three phase asynchronous motors can be connected to the **DRV300** regulator in applications where the torque-motor speed characteristic is quadratic.
This mainly allows phase cutting application with axial and centrifugal fans used for control purposes (max. **4 kw** for fan's motor).
The correct electrical connection and the supply voltage are given on the motor's specifications plate.
The sense of rotation of the motor can be altered by swapping the connections of two of the three supply cables.
It is important to keep the motor power supply cable as short as possible to reduce the level of interference and leakage currents to a minimum **(10 / 15 mt)**; if the cable has to be long, an auxiliary three-phase filter of exactly the same power as the regulator must be installed on the regulator output.
The figure below shows the star and delta connection configurations.

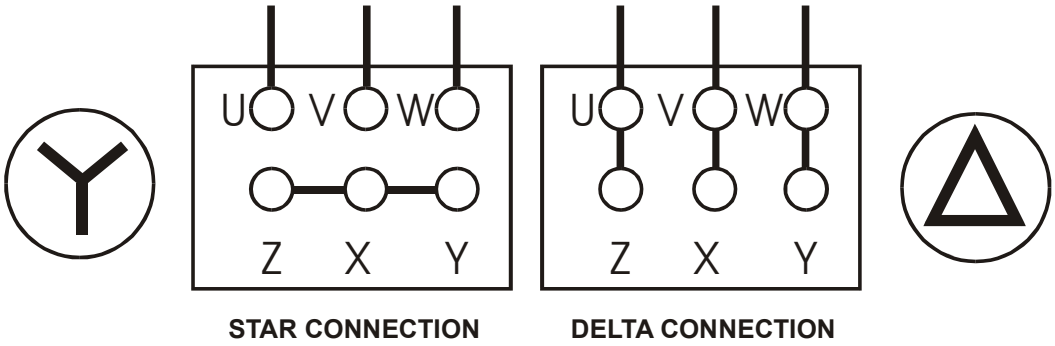

fig. 8

The **DRV300** regulator can control several motors connected in parallel but the absorption of the motors' total current must never exceed the rated current as given on the **DRV300**'s specification plate.
The speeds of the motors vary at the same time though any differences in behaviour during start up and at low speeds are due to slight differences between the motors even if they are of the same type. However, if the required speeds of the motors are different, motors must be used with different rated speeds. Bear in mind though that motors with very different characteristics create different electrical situations and these may cause problems on start up and at low speeds caused by different resistances of the stators which require different voltages on start up and at low speeds.

1.4.1 Magnetothermal protection

DRV300 devices must be protected by a magnetothermal switch fitted upstream of the cutting regulators. **Installation of magnetothermal protections is the responsibility of the installer**.
It is advisable to fit an automatic magnetothermal protection with a '**C**' intervention curve having the following capacity:

DRV models	magnetothermal carrying capacity
DRV 308	12 A

Table 2

1.5 DRV300 Technical Characteristics

Supply	Voltage	**420VAC +/- 10 %** three-phase (**230VAC & 500 VAC** on request)
	Vac Limit	**Under supply : 350 Vac 50/60 Hz (for low Vac DL4 = ON)**
		Over supply : 460 Vac 50/60 Hz (for over Vac SURGE protection = ON)
	Frequency	**50/60 Hz** (60 Hz only with factory calibration)
	Overvoltage protection	for installation Category **II** (**4 KV**)
Current	Rated	**RMS** up to **50°C** environment, over decrease by **0.3 A/°C**
	Overload	**200%** of the rated current (max. **10"** every **3'**)
Power	Control circuits	**3 VA**
	Thermally dissipated	**32 W @ 8 A (RMS)**
Operating principle	Totally controlled three-phase cutting, with compensation for inductive loads and motors, without need for connection to NEUTRAL ; the Automatic Phase monitoring switch-off in case of missing line Phase	
Operating characteristic	The output voltage increase as the input increase, in according to the specific appliance regulating curve.	
Input signals	There are two inputs available : • **0-10 Vdc, Ri = 10 khom** analog input, form automatic/manual regulation • Opto-isolated **PWM** '**0-cross**' input modulation with extended V-range (5V to 30V)	
Output supply	Potentiometer supply	**+10Vdc / 5 mA** stabilized output for **10 kohm ½ W** lin. potentiometer
VAC available working limit	**MAX OUT Vac**	Adjustable from 100% to 50% VAC
	MIN OUT Vac	Adjustable from 0% to 75% VAC
	CUT-OFF	Adjustable from 0% to 70% VAC
Predispositions	Acceleration Ramp	Fixed 5"
LED signaling	Power Supply O.K.	**DL1** (green) : Signal the presence of supply voltage – DRV O.K.
	PWM signal ON	**DL2** (green) : Signal the PWM mode function
	VAC Starting	**DL3** (green) : Signal the VAC starting to the connected load
	Regulation ALARM	**DL4** (red) : VAC regulation stoppage due to ▪ absence of one supply phase (monitoring phase) ▪ power supply under range (less than 15% to Vac reference)
Protections	**EMC integrated** filter	according to **EN 61000-6-2 & 3 and EN 61300-3**
	SURGE arrester protection	according to **EN 61000-4-5** : overvoltage Category **II** (**4 KV**)
Alarm signals	Mains phase monitoring	Checks contemporary presence of the three supply voltage phases, it locks the unit if one of the three phases is absent when the **DL4** is switched **ON**
Case	Standard solutions	**IP55**
	Materials	GW Plast **120°C** and aluminium
	Cover screws	N.4 Cover screws **TPN** (**CEI 23-58**) max. 2,5 Nm
	Degree of protection	**IP55** (using the cable gland kit)
	Environmental pollution	Strong pollution (using the cable gland kit)
	Fire resistance	Category **D**
Insulation	Case	Class **I** (use of earthed protection cable)
	Control circuits	**2500V** between control input and mains voltage components
Temperature	Working	**-20 T 50** (from –20°C to + 50°C) at -10°C switch off with S/S contatct
	Storing	**-30 T 85** (from –20°C to + 85°C)
Humidity	**RH < 85% non-condensing**	
Installation	Vertical wall-mounting only, with **N° 4** ∅ 5 mm holes	
Electrical connections	Signal	Trailing cable with rated cross section max. **1,5 sq mm / 22-14 AWG Cu**
	Power	Trailing cable with rated cross section min. **2,5 sq mm / 20-12 AWG Cu**

Table 3

2.0 ELECTRICAL CONNECTIONS

2.1 POWER CARD CONNECTIONS

For supply and load connection, reference should be made to the diagrams shown in **fig. 8,** making sure the section of the cables is adequate to the connected load.
The power cables (supply and load) must be installed separately from the control cables (analogue inputs and **ON-OFF** inputs/outputs) keeping the maximum distance possible between the conductors.
Do not place power cables with signal cables in the same raceway. If the cables cross one another, ensure it is at 90°.

ATTENTION : connect the Earth conductor to the screw placed purposely beside the dissipator. Use heat resistant cables able to withstand temperatures greater than 90°C.

SURGE ARRESTER : electric protection placed between the regulator supply and the earth to protect the device from transitory mains excess voltage.
ATTENTION : disconnect the faston contact from the earth reference in the 'electric strength test'.

The **DRV300** regulators allows connection of three-phase loads *without requiring Neutral connection.*
This simplifies installation and facilitates the **STAR** or **DELTA** load configuration.
It is advisable to provide a by-pass switch to allow load activation even when the cutting regulators is faulty (**emergency by-pass**).

When connecting the by-pass, the following precautions should be taken into consideration:

i) connection made through the by-pass switch must keep phase correspondence unaltered so as to avoid destructive shortcircuits and maintain the motor's sense of rotation.

ii) before supplying the load with maximum voltage, supply to the regulator should be disconnected, therefore:

- **it is advisable to use a three-position manual switch as a commutation device**
- **if automatic commutation is carried out by means of contactors, make sure there is some delay (at least 2 seconds) between regulator disconnection and load activation operations.**

Electrical connection of the supply and load for **DRV300** regulators is shown in **fig. 9**

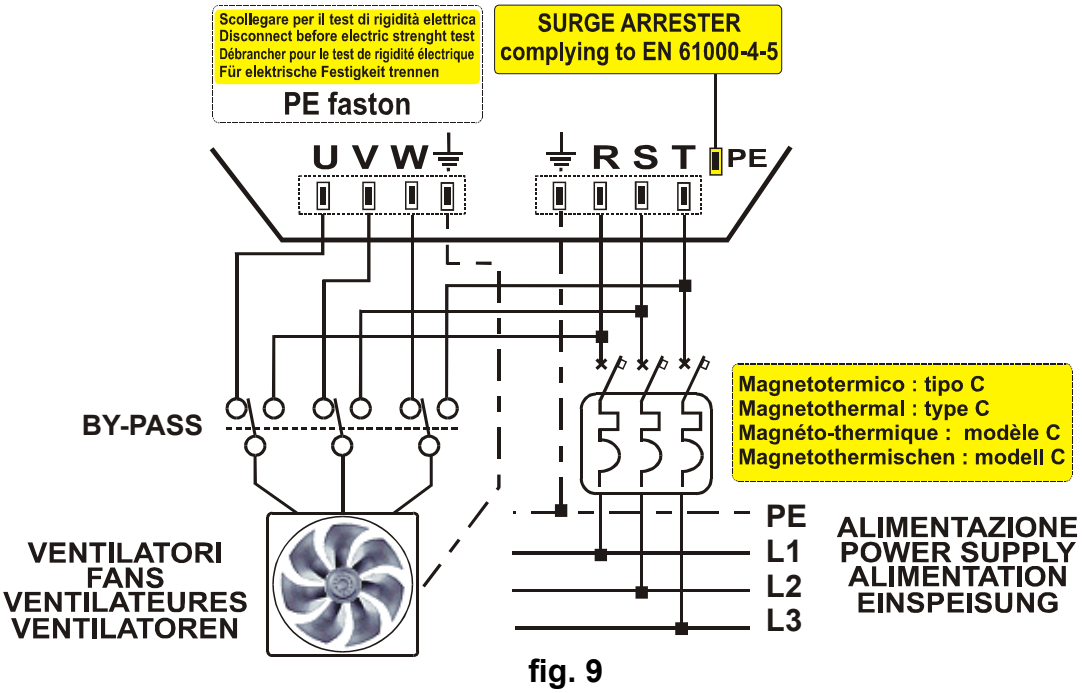

fig. 9

2.2 ANALOGUE INPUT SIGNALS

The DRV300 regulators are power SLAVE unit specialized for the speed control of asynchronous motors of axial and centrifugal fans through a 0-10Vdc or PWM control signal from remote controller.

The two configurations allow a grid of several regulators to be controlled via a single regulation control signal (Vdc or PWM), even if the regulators are a mixture of single phase and three phase.
It's therefore possible to control totally and automatically several ventilation units and, if necessary, to release one or more regulators from automatic regulation that, using a local, manual control signal, are regulated to the requested voltage.

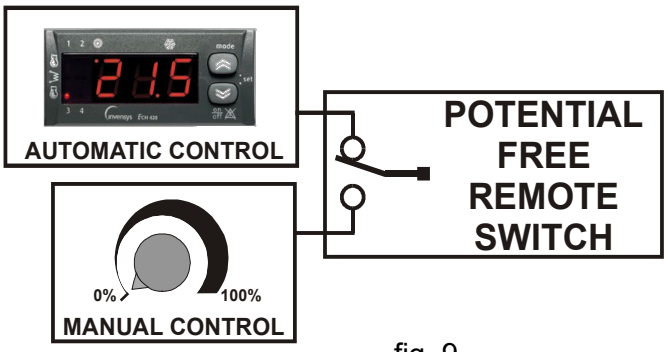

fig. 9

In standard condition the **DRV300** is at **MAX. OUT** when the **INPUT** control signal is at max. value.

0-10 Vdc	Voltage control signal (**Vdc**)
PWM	**PWM** modulating control signal (from 5 V to 30 V)

CONNECTIONS	Trailing cable with rated cross section max. **1.5 sq mm / 22-14 AWG Cu**

2.2.1 Remote 0-10 Vdc INPUT

The **AUTOMATIC / MANUAL 0-10Vdc** control signal, can be connected to terminal block.
See the fig. 11 for the correct connection of the Automatic / manual mode function.

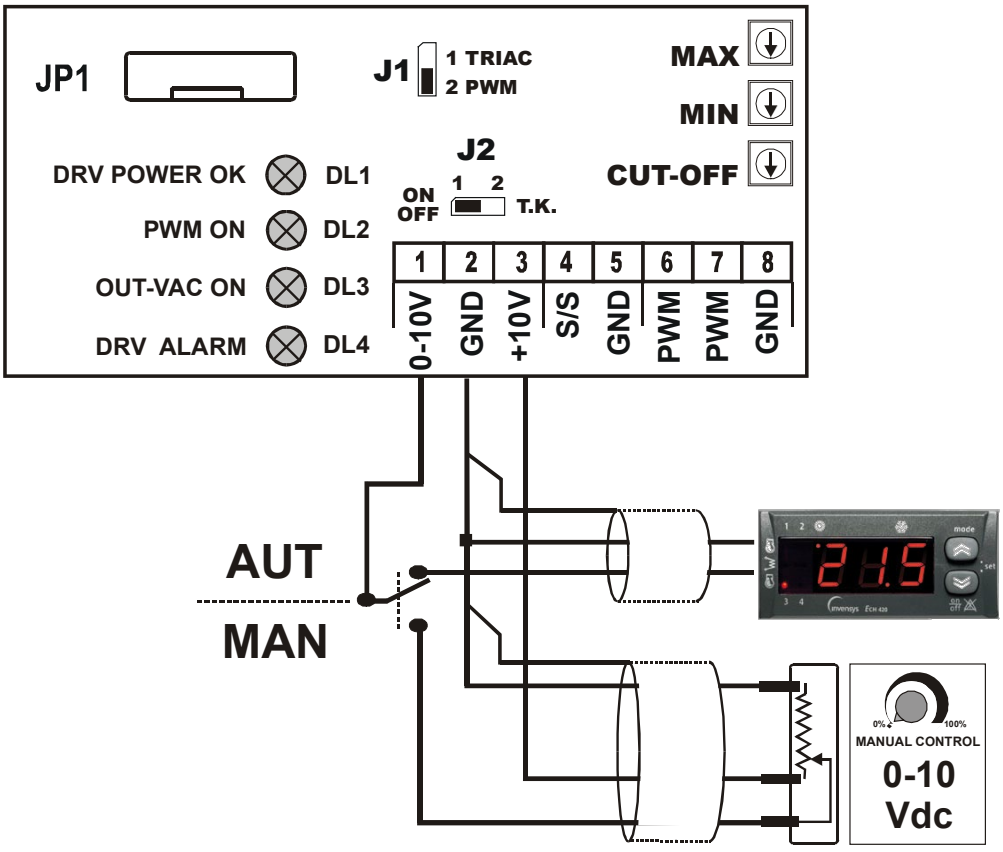

fig. 11

2.2.2 Remote PWM modulating INPUT (PPM-TRIAC)

The **AUTOMATIC PWM (PPM- >TRIAC)** control signal caming from a remote controller, can be connected to terminal block.
The PWM input it's for 5 V to 30 V (extended V-range INPUT).
Connect the PWM signal to the terminal screw (6 & 7) without problem for the +/- polarity, because the circuit of the controller set and adapt automatically the input signal.
The GND terminal is only for the connection of the ground of the signal cable.

ATTENTION : don't mix power cables with the PWM signal cable

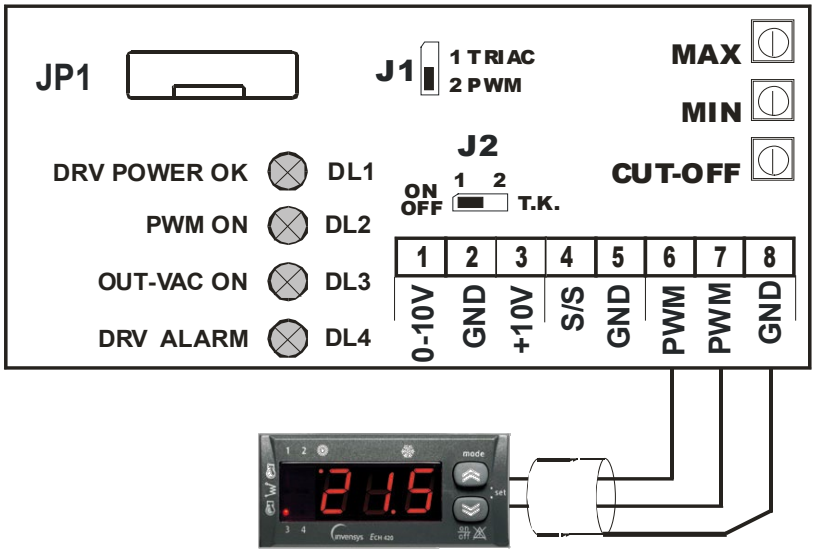

fig. 11

Jumper J1: Set **ON1** for **TRIAC (*)** input control
Set **ON2** for **PWM** input control
(*) Use the phases "S & T" for the power supply of the remote controller, for the correct phase-cutting (**ZERO-CROSS FUNCTION**).

2.2.3 Auxiliary (S/S) ON-OFF contact

S/S N.O. : remote ON-OFF function

S/S = OPEN	**Regulation O.K.**
S/S = CLOSED	**Regulation Stop**

With S/S = Closed it's stopped the VAC regulation through a potential 0V remote switch.
This is useful, for example, to stop the fans during defrosting or to link fan operation to activation of a central unit (e.g. compressor) or an alarm (e.g. max./min. temperature).

S/S N.C. : T.K. function

S/S = CLOSED	**Regulation O.K.**
S/S = OPEN	**Regulation Stop for T.K. open**

Intervention of an external safety device T.K. (Thermal Contact = a **0 V** potential contact) halts the operation of the regulator.
In plants with T.K. ans in parallel, individual protection devices must be used for each motor connected so as to reduce the risk of a total stop.

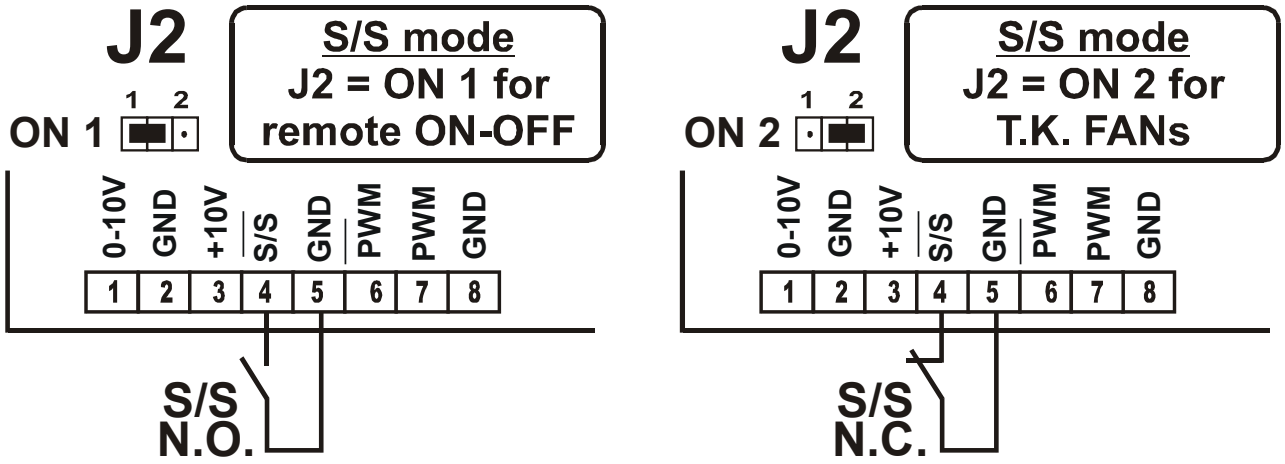

fig. 13

3.0 TRIMMER working VAC limit

WARNING : Before starting the regulator vac setting limit, check the start position of the trimmers : MAX at "M", MIN" & "CUT-OFF at "m"
The position of the trimmers marked with a spot of red paint (factory calibrated trimmers) must not be altered.

3.1 MAX output VAC limit

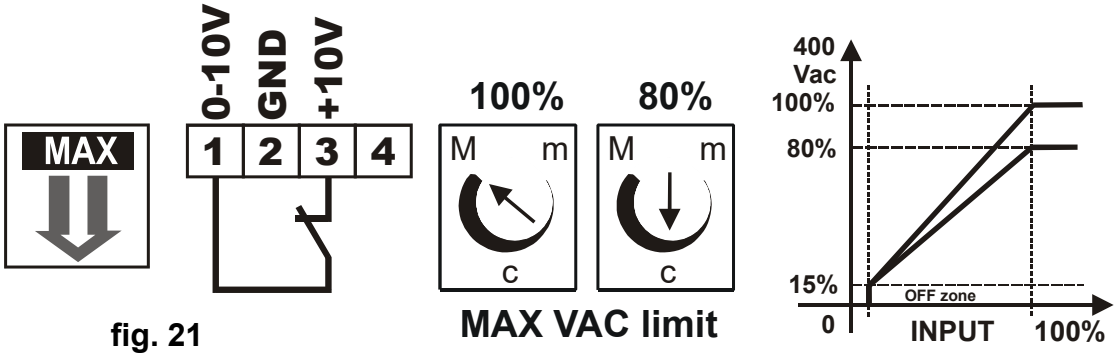

fig. 21 MAX VAC limit

MAX. OUT
M = 100 %
m = 50 %

Limit the maximum operating voltage (from 100% to 50%).
It is useful for limiting the maximum capacity or noise of the fan when turning at 100%
It's set in the factory to the MAX value '**M',** which corresponds to the max. VAC supplied to the fan and equal to 100% of the control value.

To regulate the **MAX. OUTPUT** voltage correctly, proceed as follows:
1) close terminal block 1 & 3 : the controller go to the 100% VAC output
2) turn the trimmer **MAX starting from** '**M**' position as far as the desired MAX. VAC value;
3) open the terminal block 1 & 3 : the controller work until the new VAC limit (MAX value) just setted.

3.2 MIN output VAC limit

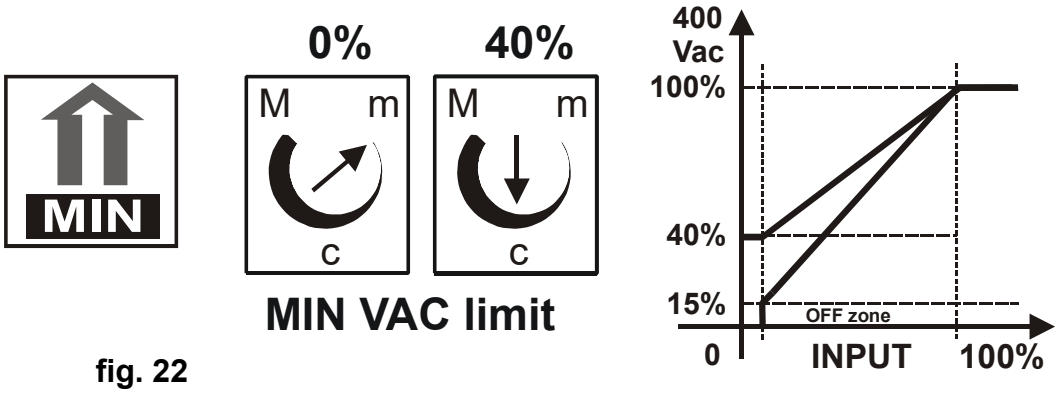

MIN VAC limit

fig. 22

MIN. OUT
m = 0 %
M = 75 %

Allows manual regulation of the minimum output voltage from 0% to 75%.
During the calibration starting phase, it is used to check the fans for correct rotation.
It is also used as reference for **CUT-OFF** calibration.

The Regulation of **MIN** trimmer supplies the fan with a constant minimum voltage (MIN Vac limit) when the automatic control is not working or the control signal is disconnected.
Rotate **MIN** anticlockwise starting from position 'm' until the desired minimum VAC voltage is reached.
Now the regulator has a under VAC limit : it can never switch off.

3.3 CUT-OFF VAC limit (VAC switch OFF value)

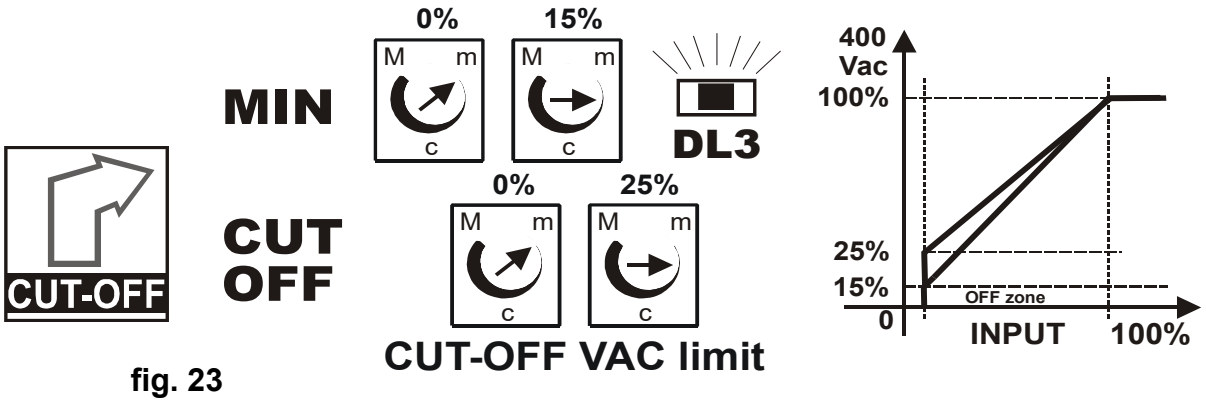

fig. 23

CUT-OFF
m = 0 %
M = 70 %

Adjusts the minimum voltage being supplied to the fan during automatic operation: the fan will not be supplied with VAC lower than the CUT-OFF predetermined value; this avoids the supply of minimum voltage which would not be sufficient to provide a starting torque for the fan rotation.

In order to adjust the **'CUT-OFF'** correctly, proceed as follows:

1) turn the **MIN** trimmer (manual speed control) starting from position '**m**' until DL3 switch ON;
2) turn the **CUT-OFF** trimmer starting from position '**m**' until the desired VAC value;
fix the **P6** trimmer position exactly and check the state of the **RL1 ON** Led which must move from the 'off' position to the 'on' position (only if **J14 = ON3**);
3) turn the **MIN** trimmer to starting position '**m'**: the load will now be VAC supplied starting from the VAC selected.

In the diagram below, is shown the **DRV300** in standard configuration and **0-10 Vdc** input, with :

- **NO** limit **MIN & MAX** output
- Operation only with **MIN-OUT VAC** limit
- Operation beetween **MIN & MAX** output **VAC** limit

Input (0-10 Vdc)	PW Supply = 400 VAC MIN/C-OFF = 0 VAC MAX = 400 VAC	PW Supply = 400 VAC MIN/C-OFF = 95 VAC MAX = 400 VAC	PW Supply = 400 VAC MIN/C-OFF = 95 VAC MAX = 300 VAC
0	**0**	**95**	**0**
0,5	**70**	**95**	**95**
1,0	**82**	**110**	**103**
1,5	**100**	**130**	**116**
2,0	**120**	**160**	**124**
2,5	**155**	**185**	**143**
3,0	**185**	**215**	**158**
3,5	**210**	**240**	**172**
4,0	**235**	**260**	**186**
4,5	**260**	**280**	**197**
5,0	**285**	**300**	**215**
5,5	**310**	**325**	**226**
6,0	**335**	**345**	**238**
6,5	**360**	**365**	**248**
7,0	**375**	**380**	**260**
7,5	**390**	**390**	**270**
8,0	**400**	**400**	**280**
8,5	**400**	**400**	**294**
9,0	**400**	**400**	**300**
9,5	**400**	**400**	**300**
10	**400**	**400**	**300**

(*) N.B. : The loss voltage is contained within a maximum limit of **1%** (Vac-supply / Vac-loss on SCR)

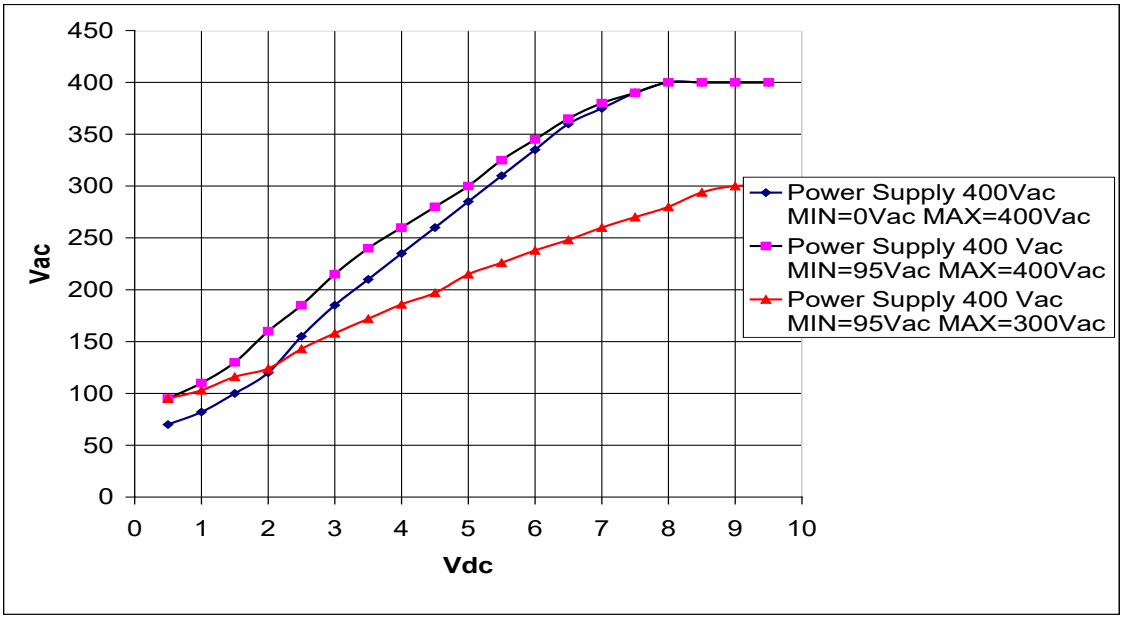

fig. 24

4.0 TROUBLE SHOOTING

Some of the problems which may occur during or after unit commissioning are listed below with their possible solutions.

Problem	Cause	Solution
Unit supplied but load does not activate.	**C1**. Absence of one phases (**Led DL4** on). **C2**. The load is not connected. **C3**. No control signal.	**S1**. Check supply connections and input phases. **S2**. Check there are no electrical interruptions between regulator and load. **S3**. Check sensors for correct operation (return voltage) and connections to signal terminal board.
Tension can be read on outlet terminal heads to load (it seems **370 VAC**) but motor does not start.	**C1**. Load not connected to regulator terminals.	**S1**. Check electromagnetic switch or motor / regulator connection sectioner. **S2**. Check the motor heat protection TK.
Protection fuses burn out.	**C1**. Regulator undersized for load used. **C2**. Interference on supply lines. **C3**. **By-pass** configuration with short circuited phases.	**S1**. Check powers involved as well as starting and operating currents. **S2**. Check the supply line and if necessary install mains or 'surge' filters upstream of the cutting regulators. **S3**. Check input and output phase correspondence.
After correctly operating for a certain time, cutting regulators supplies the maximum voltage load regardless of control signal.	**C1**. Lack of ventilation and/or high working temperature in the unit. **C2**. Remote control signal faulty or short-circuited.	**S1**. Check the unit is mounted vertically; check the room temperature where the unit is installed. **S2**. Check input control voltage (**input** terminal board).
Unit has suspended regulation and Led **DL4** is on.	**C1**. A fuse has burnt out or one of supply phases is absent.	**S1**. Replace supply line fuse and check beginning of line upstream.

Table 4

5.0 Regulations Accessories



♦ Protected potentiometers for manual control

- Potentiometer for external set value adjustment
- Manual speed setting with 0-10 Vdc
- Available 1 & 10 turns with standard knob ∅ 22
- Available for 10 turns potentiometer the ∅ 30 knob with 100 Set-points
- Mounting in switch cabinet doors, shaft length 15 mm, ∅ 6.3 mm
- Complete with front plate 50 x 50 mm.



Linear potentiometer for **0-10 Vdc** remote manual control
1 turn (10kohm 1W cermet)
Complete front plate with serigraphy label 50 x 50 mm. and knob diameter ∅ 22

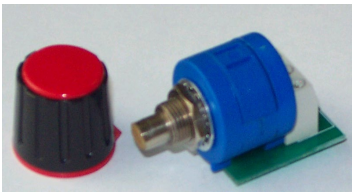

Linear potentiometer for **0-10 Vdc** remote manual control
10 turn (10kohm 1W cermet)
Complete front plate with serigraphy label 50 x 50 mm. and knob diameter ∅ 22

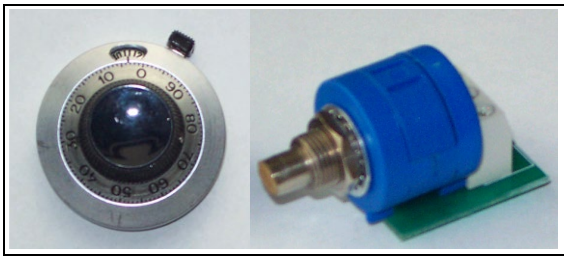

Linear potentiometer for **0-10 Vdc** remote manual control

10 turn – 10kohm – 3 W - wire

Complete front plate with centesimal knob, diameter ∅ 30

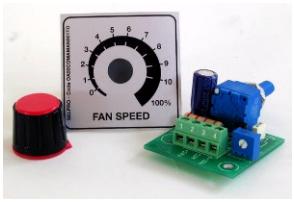

Converter manual control :

Input 24VAC >>> OUTPUT 0-10VDC

for motorized shutters and valves, with adjustable MAX LIMIT

Complete front plate with serigraphy label 50 x 50 mm. and knob diameter ∅ 22

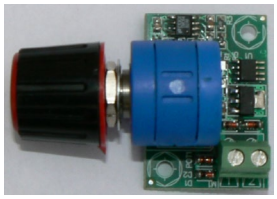

Converter manual control :

Input 24VDC >>> OUTPUT 0-20 mA

Connectable to all SELPRO regulators for 4-20mA test input signal and for motorized shutters and valves

Complete front plate with serigraphy label 50 x 50 mm. and knob diameter ∅ 22

Pressure Transducer for 4-20 mA & 0-5 V

Description	4-20 mA	0-5 Vdc
Control signal	**4 … 20 mA**	**0,5 … 4,5 V**
Supply	**8 … 28 V**	**5 V +/- 0,25V**
Range (bar)	**0 … 15/25/30/45**	**0 … 30/45**
Linearity	**< 0,5 % FS max**	
Temperature compensation	**0° … 50°C**	
Elettrical connection	**2 wire**	**3 wire**
Mechanical connection	**7/ 16" - 20 UNF**	
Protection	**IP 65**	



Temperature probe (NTC)

Sensor	resined **NTC 10kohm @ 25°C** probe with INOX haed
Connection	Silicon (light blue) 3000 mm
Terminal	**cable**
Work range (°C)	**INOX AISI 304 da 6 x 40 mm. –50 T 110**



Temperature probes are manufactured by using selected materials.
The modern constructive technology ensures the product a very long life, even in particularly heavy industrial application.

RGF-MEI(4) / UNIVERSAL inputs Expansion



Electronic “All-Round” unit, for the multi-connection circuits, for 4 (four) inputs for all the regulations applications :
4-20mA, NTC (10kohm), 0-5 Vdc, 0-10 Vdc, 0-20mA,
Selectable (by-jumpers) MASTER-SLAVE function for :
- NTC Temperature, Pressure, Remote signals, etc. ..
- Automatic selection between the MAX/MIN in value

Other characteristics :
- OUT-put-Signal for net of other MEI units (max 3)
- Active INPUTs Visualization LEDs
- FUSE Power supply protection
- Power supply “surge” protection
- Inputs protection against circuit-break
- Protection filter against input signals surge

NTF - LOW NOISE FILTER FOR ALL STEPLESS CONTROLLERS



♦ NTF300 – Extra dB attenuator

- With this filter you can reduce the dB noise of the phase-cutting regulation

The noise filter type "NTF" should be used with regulating fans by electronic voltage controllers.
The noise filter consists of a choke and condensers for reactive-current compensation.
The choke is connected to the fans in the leads at the controller output.
Operation with choke and condenser without a motor is not permitted.

- Protection with **IP 55 Box**
- Power Supply :

3~ 420Vac +/-10% – 50/60 Hz (standard)
1~ 230Vac +/-10% – 50/60 Hz (standard)

The size of the condenser (3 condensers per motor) depends on the motor's operating data.

FUNCTION	AMP (RMS)	POWER SUPPLY	PRODUCT CODE
EXTRA DB NOISE SUPPRESSOR	02 A	230 VAC	ZC NTF 102 23 100S00
	04 A		ZC NTF 104 23 100S00
EXTRA DB NOISE SUPPRESSOR	04 A	400 VAC	ZC NTF 304 42 100S00
	08 A		ZC NTF 308 42 070S00

In these graphical tables are shown the typical courses of the noise function (dB value) for the RGF300 (Three-phase cutting regulator) with ZIEHL-ABEGG fans.
The evidence of the values are for the the regulation with and without NTF noise filter.

FE080-SDA.6N.2NV 6/6 P

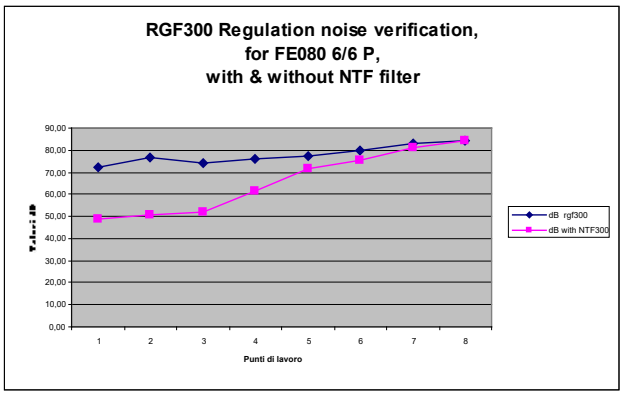

FE080-NDA.6K.2NV 12/12 P

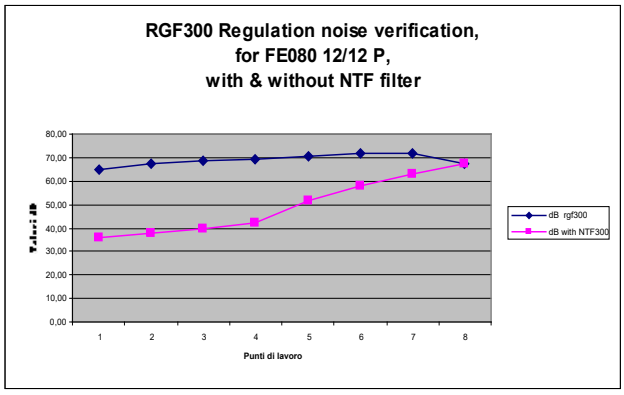

Connect only 1 or 2 fans to the noises suppressor filter; the **µF** value is for the 3 condenser (1 for phase)

TECHNICAL ASSISTANCE SHEET

1. All **DRV300** equipment are guaranteed for **36** months from the date of testing.
2. The guarantee is rendered invalid under these circumstance:

- evidence of tampering with the mechanics or electrics
- improper use
- incorrect installation
- external electrical causes

Please keep this sheet near the 'DRV' regulator. To improve the assistance service and speed fault diagnosis, please fill this sheet in and send it to the Assistance centre together with the regulator in the event of a breakdown.

Customer:	**Regulator model:**	
Serial no.:	**Date of installation:**	**Date of breakdown:**

Description of the fault

☐ Noisy motor	☐ Burnt out motor	**Burnt fuse**						
☐ Unbalanced phases	☐ Protection interrupt	☐ phase **R**		☐ phase **S**		☐ phase **T**		
☐ Blocked motor	☐ Differential interrupt	VAC		VAC		VAC		
		AMP		AMP		AMP		

☐ **Description:**

Controls and contacts check card

☐ MAX OUTPUT	☐ Supply 10Vdc / 5 mA	☐ INPUT Vdc
☐ MIN OUTPUT	☐	☐ INPUT (PWM)
☐ CUT-OFF	☐ Contact S/S	☐
☐	☐	☐

Details of the connected load

Manufacturer:	Type ☐ fans ☐ electric resistors
Electrical data ☐ VAC ☐ Amp ☐ Start amp. ☐ Code	

	Motor		**Electrical data**		
Electrical data	☐ star	☐ delta	Phase R S	V	Amp
Traction	☐ direct	☐ belt driven	Phase S T	V	Amp
Mechanics	☐ helical	☐ centrifugal	phase T R	V	Amp

Operator name:	Company stamp:

ENHANCED AC & EC FANS CONTROLLERS

ENERGY-SAVING SYSTEM
SAVES UP TO
27%
OF ENERGY

ADVANCED ADIABATIC SYSTEM
-90%
OF WATER CONSUMPTION

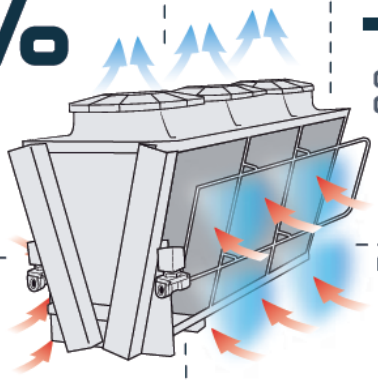

QUICK START-UP
READY TO PERFORM IN LESS THAN
10 MIN

BOOSTED REGULATION
100%
MODBUS
SYSTEM MANAGEMENT

CLEAN NOISELESS TECHNOLOGY
0%
Extra dB
THD

APPROVED ebmpapst products CONTROLLERS

Solutions you need

APPROVED ZIEHL-ABEGG CONTROLLERS