CMM - Vdc Manual command and Vdc net enhancer (60mA - Type AE)

INTRODUCTION

1.1. Important

- Read these instructions carefully before installation.
- Before use, follow all the installation and electrical connection instructions.
- Keep these instructions with the manual command for future use.
- Observe current technical and safety regulations.
- The manual controller must be professionally installed and commissioned by a qualified technician. INCORRECT installation may cause damages.
- DO NOT tamper with or REMOVE manual controller components; this NULL AND VOIDS THE WARRANTY and can cause damages.
- According to safety regulations, protection against any contact with live parts must be ensured by correct manual controller installation; all parts that ensure protection must be secured so as irremovable without the help of a tool.
- NEVER touch electrical circuit parts when the power is on.
- Install the manual controller in a position protected from direct sunlight.
- Make sure working conditions (working temperature, humidity, etc.) are within the indicated limits (see point 4).
- Do not install the manual controller near heat sources (resistances, hot air ducts, etc.) where room temperature can exceed 50 °C, devices that generate strong magnetic fields, sites subject to rain, humidity, dust, excessive mechanical vibrations or shocks.

2. CMM REGULATOR UNIT DESCRIPTION

2.1. Overview

The “EDDY” series equipment, CMM version from 60 mA and from 200 mA, are electronic controllers with extended multifunctional operation that convert the input power supply voltage (24 Vac) to generate the **AMPLIFIED 0-10 Vdc Command** to operating systems and devices, like EC fan motors, motorized actuators, and adjustable devices with direct current voltage command signals.
The CMM controller is a device that can work in a number of functional modes, like **MASTER**, **SLAVE** and always as a signal **BOOSTER** for received commands, with the **Fail-Safe*** function active ***(* function of automatic insertion of the 0-10 Vdc command output of the value of P1, in the event of interruption/fault of the remote control signal, as Emergency By-Pass)*** that guarantee the continuity of regulation and the intrinsic safety of the system, even in Emergency operation.

1) In the **MASTER** function, it generates the adjustable 0-10 Vdc command directly.
2) In the **SLAVE** function, it adapts the input 0-10 Vdc command to the power needs for the system to be regulated with the Vdc signal.

With the BOOSTER function, always active in both modes, the regulation command is stabilized and amplified from 0.1 mA to 60 mA (or 200 mA), to manage the proportional regulation of a 0 -10Vdc "System" continuously and efficiently.
The regulator has active and passive protections, such as the protections on the input, on the command output and on the power supply.

(*) FAIL-SAFE: function for automatic insertion of the P1 value on the 0-10Vdc control output, in the event of interruption/failure to the remote control signal, as an Emergency By Pass

2.2. Key

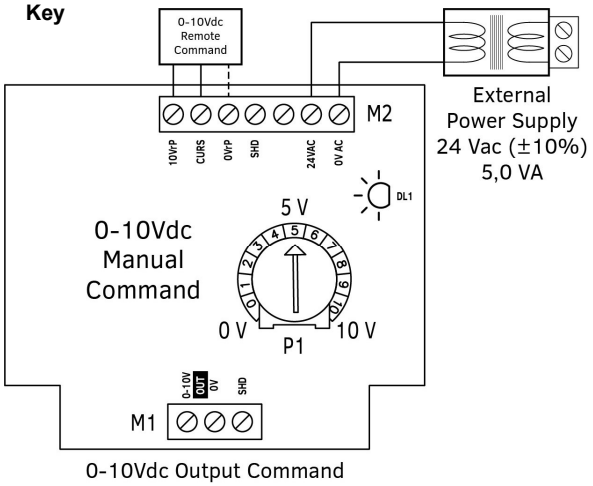

2.3. Mechanical dimensions

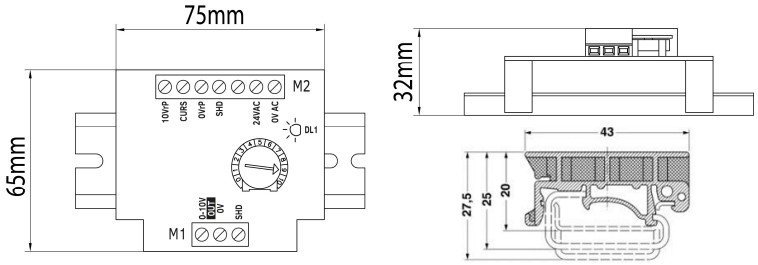

2.4. Installation

Rest and hook the control board supports to the omega/C bar after having correctly positioned the special hooking supports supplied.

2.5. Functionality and electric connections

2.5.1. Manual Control (P1) with external ON-OFF contact (Speed-UP)

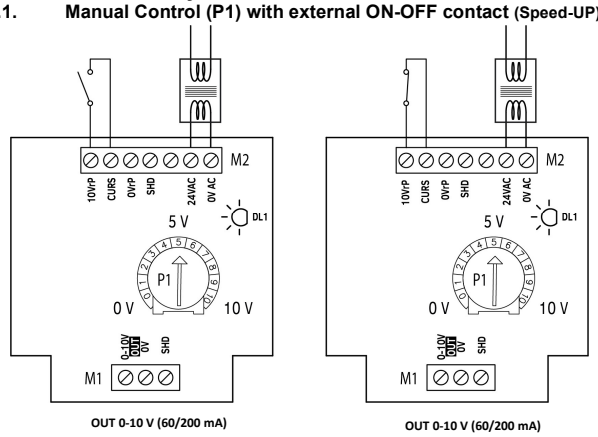

Based on the position of the ON-OFF contact, connected between CURS and 10VrP, the 0-10 V OUT output behaves as follows:

- Contact OPEN > command 0-10 Vdc in output at value of P1
- Contact CLOSED > fans controlled to 100% (Sped-UP)

2.5.2. Remote Manual Control with POTENTIOMETER and ON-OFF contact, with FAIL-SAFE* Function (point 2.1)

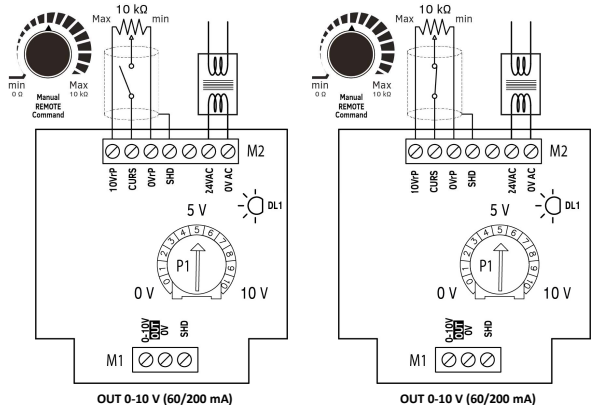

Based on the position of the ON-OFF contact connected in series between CURS and external potentiometer cursor, the 0-10 V OUT output behaves as follows:

- Contact OPEN > command 0-10 Vdc in output at value of P1.
- Contact CLOSED > 0-10 Vdc output regulated by external potentiometer.

2.5.3. Remote Automatic Control with THERMOREGULATOR and ON-OFF contact, with FAIL-SAFE* Function (point 2.1)

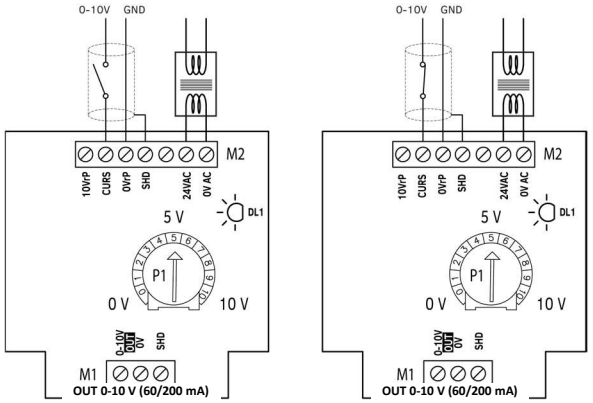

Based on the position of the ON-OFF contact connected in series between CURS and the external 0-10 V Master signal, the 0-10 V OUT output behaves as follows:

- Contact OPEN > command 0-10 Vdc in output, at value of P1.
- Contact CLOSED > 0-10 Vdc output regulated by the external automatic signal.

CMM - Vdc Manual command and Vdc net enhancer (60mA - Type AE)

2.5.4. Example of the CMM Manual Control connection with EBM-Papst A3G EC fan (that absorb 0.1 mA from the 0-10 V control signal)

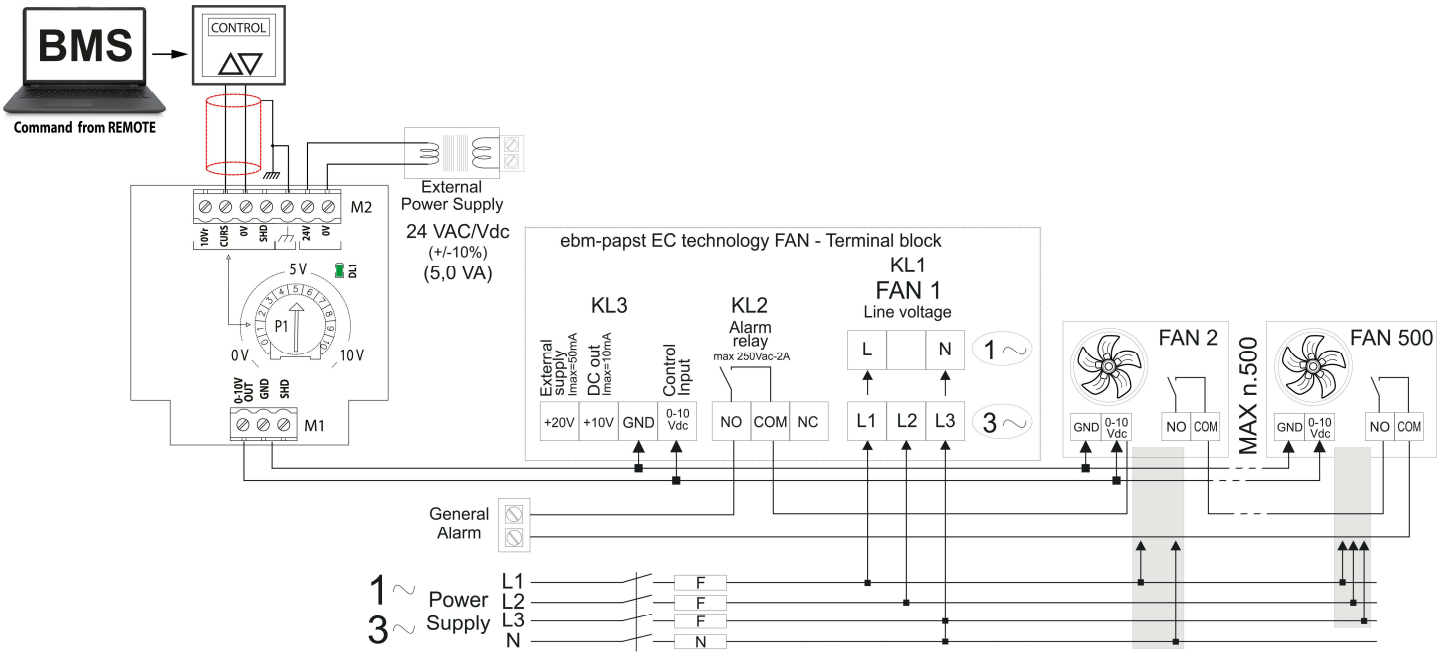

2.5.5. Example of CMM Command connection to the EBM-Papst EC fan Motors COMPACT ACi 4400 HHAU series (that absorb about 8.0 mA each from 0-10 V command)

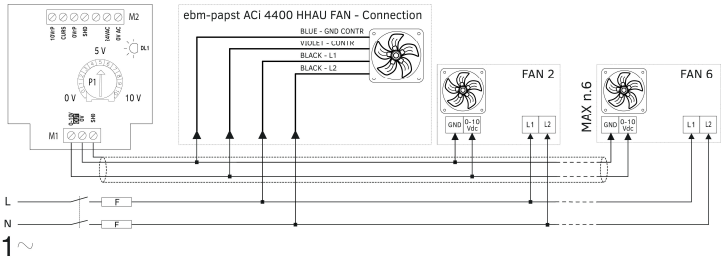

Graphical exemplification of the functional LIMIT of the 0-10Vdc regulation command, and of the effective ENHANCEMENT of the 0-10Vdc command signal for managing the network of electric actuators

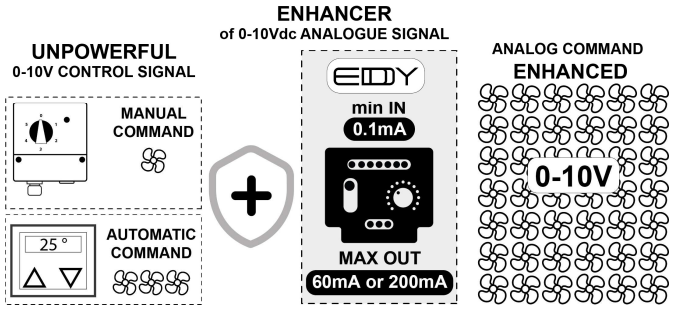

3. SIGNALS

3.1. Display and Signal LEDs

LED	Color	Label	Description
DL1	GREEN	-	Power on - OK (light on)

4. TECHNICAL SPECIFICATIONS

Power supply:
AC voltage: 24 Vac (±10%) – Imax 190 mA
Maximum absorbed power: 5 VA
Frequency: 50/60 Hz

Output signal:
Analog: 0-10 Vdc max current 60 mA with automatic limitation
(On request, the version with 0-10 V at 200 mA output is available)

Electrical connections:
Flexible cable section
Rated section: ≤1.5 mm² (16 AWG)
Torque: ≤ 0.6 Nm

Protections:
Protection grade: IP00 for DIN-rail application (omega or C bar)
Power supply: with PTC resettable fuse for short-circuit protection

Working conditions:
Working temperature: from -20 °C to 55 °C
Storage temperature: from -25 °C to 75 °C
Humidity: from 0% to 85% non-condensing relative humidity
Vibrations: ≤ 1 g (9.8 m/s²)

Assembly:
Assembly: for electric panel on omega/C bar (DIN-rail)
Available in IP55 box (upon request)

5. DIRECTIVES AND TECHNICAL STANDARDS

The essential directive requirements are met by compliance with "generic standards" for the industrial environment

5.1. EC - Declaration of conformity

Directive	Standard code	Version
EMC 2014/30/UE	EN 55014-1 EN 55014-2 EN 61000-3-2 EN 61000-3-3	2023-09 2021-11 2024-06 + /A1 /A1 2021-07, /A2 2022-07
Safety 2014/35/UE	EN 60335-1	2025-06
RoHS	EN 50581	CEI EN IEC 63000:2019-04 CEI EN IEC 63000:2021-03

5.2. UK - Declaration of conformity

Subject	Name	Version
EMC	BS EN 55014-1 BS EN 55014-2 BS EN 61000-3-2 BS EN 61000-3-3	2023-09 2021-11 2024-06 + /A1 /A1 2021-07, /A2 2022-07
Safety	BS EN 60335-1	2025-06
RoHS	BS EN 50581	CEI EN IEC 63000:2019-04 CEI EN IEC 63000:2021-03

The instrument must be disposed of according to local electric and electronic device disposal regulations.