10. Technical specifications

10.1 Physical properties

10.1.1 Dimensions and weight

***NOTICE**: provide space around the controller as indicated in "Guarantee cooling" on page 22.*

Model	A	B	C	D	E	Weight (kg)
RGM312	200	285	128	153	255	3.4
RGM320	235	350	181	185	320	5.3
RGM328	235	350	204	172	320	6.1
RGM340	315	415	178	273	403	11.5
RGM360	315	491	228	255	436	16.7

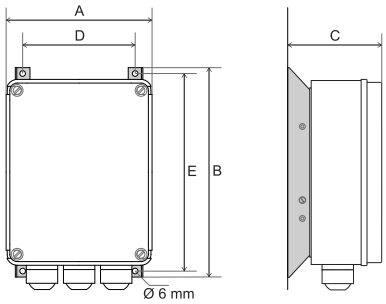

10.1.2 Case and cable clamps

Materials	GW-PLAST 75 maximum temperature 60 °C (ball heat sealing 85 °C) and aluminum.
Screw plugs	TPN series with max 1.8 Nm torque (CEI 23-58)
Protection rating	IP55
Pollution	High Pollution
Fire resistance	Category D
M25 cable clamps	IP67 protection, class V2, polyamide PA6

10.1.3 Storage and installation environmental conditions

Working temperature	from -20 to +50 °C. For temperatures below -10 °C use input **S2**.
Storage temperature	from -25 to + 60 °C
Humidity	RH < 85% non condensing
Vibrations	Under 1 G (9.8 m/s2)

10.2 Electrical specifications

10.2.1 Applications

High-speed, three-phase, asynchronous motors with adjustable voltage applied to axial or centrifugal fans.

10.2.2 Specifications

Rated voltage	400 V ac ± 20% three-phase On request 230 V ac / 500 V ac
Frequency	50/60 Hz automatically recognized
Maximum pickup current (*)	I> 200% In, alarm trigger time is about 5 s
Maximum current (thermal) (*)	I = 130% In, alarm trigger time of about 120 s I = 160% In, alarm trigger time of about 30 s I = 190% In, alarm trigger time of about 13 s To know the current thresholds and trigger times, see "Overload protection function (optional)" on page 41
Minimum current	0.2 A
Over voltage protection	Surge category II (4 KV), EN 61000-4-5
Overload protection	Optional.
Auto restart	The controller automatically restarts as soon as the alarm condition is cleared.
Maximum absorption on signal 0-10 V	20 mA (minimum load resistance 500 Ω) ***NOTICE**: always check total absorption on signal 0–10 V.*
Transducer power supply	22 Vdc -10/+20 % 60 mA, not stabilized. Protected against short circuiting.
Potentiometer and sensor power supply	10 Vdc/5 Vdc (automatic switching), stabilized with protection.
RL1 relay	**NO**: 5 A at 250 Vac and cosfi 0.8 **NC**: 3 A at 250 Vac and cosfi 0.8

***Note (*)**: if overload protection is installed.*

10.2.3 Rated current and power

Model	RMS rated current Ampere (In)	Three-phase output	Environmental temperature downgrade > 50 °C (A/°C)	Rated power nominal kVA @ 400 Vac	Dissipated power command circuits	Power dissipated in the area
RGM312	12	Single, x4	0.6	8.0	10 W	72 W @ 12 A
RGM320	20	Double, x8	1	13.0	10 W	120 W @ 20 A
RGM328	28	Double, x8	1.4	17.0	10 W	168 W @ 28 A
RGM340	40	Single	2	27.0	10 W	240 W @ 40 A
RGM360	60	Single	3	41.0	10 W	360 W @ 60 A

10.2.4 Nominal current declassified due to height of installation

Installation height (m)	0	1000	1500	2000	2500	3000	3500
Rated current reduction (%)	100	95	90	85	80	75	70

10.2.5 Electric insulation

Case	Class I (use of grounded protection conductor)
Command circuits	4000 V ac between command input and mains voltage parts

10.2.6 Nominal cable sections

	Signal (min–max values)		Power output (min–max values)		Power supply (min–max values)	
Model	**mm²**	**AWG Cu**	**mm²**	**AWG Cu**	**mm²**	**AWG Cu**
RGM312 (single output)	0.5–1.5	20–16	1.0–2.5	17–13	1.0–2.5	17–13
RGM312 (output x4)	0.5–1.5	20–16	1.0–2.5	17–13	1.0–2.5	17–13

	Signal (min–max values)		Power output (min–max values)		Power supply (min–max values)	
Model	**mm2**	**AWG Cu**	**mm2**	**AWG Cu**	**mm2**	**AWG Cu**
RGM320 (double output)	0.5–1.5	20–16	1.5–4.0	15–11	1.5–4.0	15–11
RGM320 (output x8)	0.5–1.5	20–16	1.0–2.5	17–13	1.5–4.0	15–11
RGM328 (double output)	0.5–1.5	20–16	1.5–4.0	15–11	1.5–4.0	15–11
RGM328 (output x8)	0.5–1.5	20–16	1.0–2.5	17–13	1.5–4.0	15–11
RGM340	0.5–1.5	20–16	2.5–10	13–7	2.5–10	13–7
RGM360	0.5–1.5	20–16	4.0–16	11–5	4.0–16	11–5

10.2.7 BELDEN cable specifications for RS485 connection

Specifications	Value
Conductor 1	CuSn 7x0.25 mm
Conductor 1 (resistance)	50 Ω/km
Conductor 2	CuSn 7x0.25 mm
Conductor 2 (resistance)	50 Ω/km
insulation	PEE 2.35 mm
Color code	White/Orange Blue
Plate 1	AL/pet 100%
Sheath 1	CuSn 65%
Internal sheath	Oil-resistant gray flame-retardant PVC
Internal sheath (diameter)	7.6 ± 0.1 mm
External sheath	Black UV ray resistant PE
External sheath (diameter)	9.0 ± 0.1 mm
Characteristic impedance	125 ± 15 Ω
Mutual or coaxial cable capacitance	MUTUAL 36 pF/m
Propagation speed	78%
Shielding efficiency (100–900 MHz)	>85 dB
Drain wire	CuSn 7x0.20 mm
Rated voltage	300 V
Working temperature	from -20 to + 80 °C
Sheath insulation	C-4 (U0=400V)
Test voltage	4.5 kV ac
Minimum bending radius (internal/external)	40/90 mm
Weight	8.4 Kg/100 m
Notes	Suitable for installation outdoors, under ground and damp environments

10.3 Maintenance

10.3.1 Clean Up

If there is dust, dirt or cobwebs on the dissipater, remove them with a cloth.

10.3.2 Responsibility for disposal



As indicated in European Directive 2012/19/EU, do not dispose of the product with other unsorted urban waste.

The owner is responsible for the disposal of these products and of the other electric and electronic equipment using the specific collection organizations indicated by the government or local public agencies.

Correct disposal and recycling help to prevent potentially negative consequences to the environment and health of people.

For more detailed information about disposal, contact the responsible public authorities, the waste disposal service, or the representative from which the product was purchased.

10.4 Conformity

10.4.1 Declaration of conformity

The full text is available on the website www.selpro.it.

10.4.2 EC - Declaration of conformity

Directive	EC standard code	Version
EMC 2014/30/EU	EN IEC 61800-3	2018
	EN IEC 61000-6-2	2019
	EN 61000-6-3	2007 +A1:2011
	EN IEC 55014-1	2021
	EN IEC 55014-2	2021
Safety 2014/35/EU	EN 61800-5-1	2007 +A1:2017 +A11:2021
	EN 60335-1	2012 +A13:2017 +A2:2019
	EN 60730-1	2017
RoHS 2012/19/EU	EN 50581	2012

10.4.3 UK - Declaration of conformity

Subject	Name	Version
EMC	BS EN IEC 61800-3	2018
	BS EN IEC 61000-6-2	2019
	BS EN 61000-6-3	2007 +A1:2011
	BS EN IEC 55014-1	2021
	BS EN IEC 55014-2	2021
Safety	BS EN 61800-5-1	2007 +A1:2017 +A11:2021
	BS EN 60335-1	2012 +A13:2017 +A2:2019
	BS EN 60730-1	2017
RoHS	BS EN 50581	2012

SELPRO Srl

Via Piamarta, 5/11
25021 Bagnolo Mella (BS) Italy

+39 (0)30 6821611
info@selpro.it

SELPRO
Fan Speed Controllers Specialist

www.selpro.it