6. Connections

6.1 Power supply wiring

6.1.1 Power wiring diagram and single output load (RGM312, RGM340, RGM360)

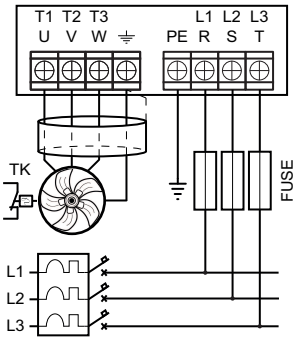

6.1.2 Power wiring diagram and double output load (RGM320, RGM328)

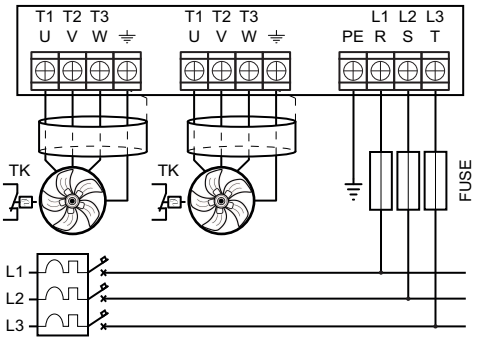

6.2 Connecting analog inputs in Slave mode

6.2.1 Connection for Slave unit with 0-10 V dc input

The connection of a potentiometer for manual control or, alternatively, a remote controller with 0–10 Vdc output is illustrated in the diagram. . If you use a shielded cable, ground the shield directly.

This connection requires the use of the configuration **rS 010**.

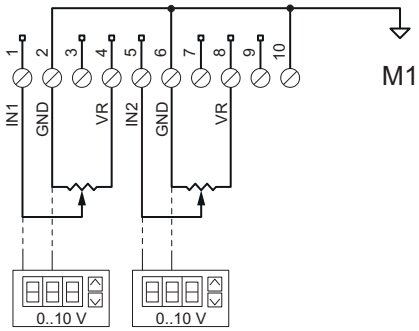

6.2.2 Connection for Slave unit with input 0-20 mA/4-20 mA

The diagram shows the connection to a remote controller with output 0-20 mA/4-20 mA or, as an alternative, to a 0-20 mA/4-20 mA transmitter for manual control. If the device has 0-20 mA output use the **rS 020** configuration, if it has 4-20 mA output use the **rS 420**.

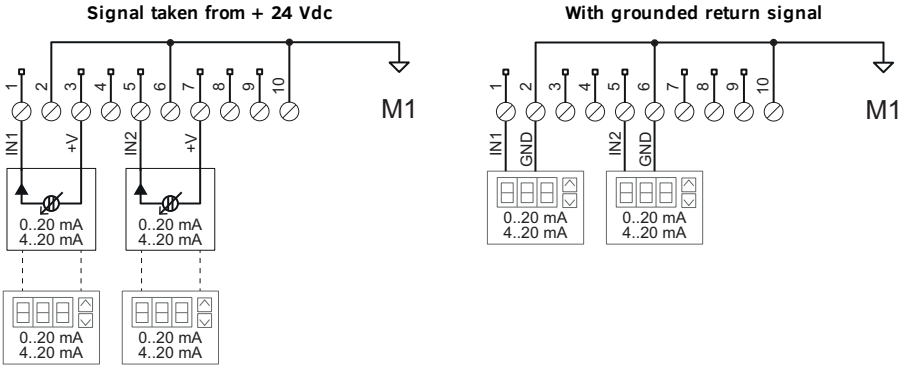

6.3 Analog input connections in Master mode

6.3.1 Connection to two transducers with 4-20 mA output

The diagram shows the connection of two pressure transducers with 4-20 mA output. Transducers can be used to read any magnitude as long as the output is 4-20 mA and the supply +22 V dc + 10-20%. The display shows mA or bar according to the default configuration.

This connection requires the use of **rPr420** (mA measurements), **rPr015**, **rPr025**, **rPr030**, **rPr045** (bar measurements) configurations.

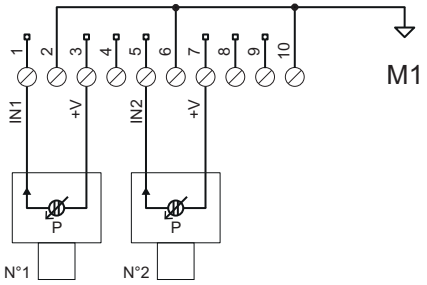

In the default configuration, the setpoint coincides with the maximum fan speed (menu **conF** > **C4** = **hi**). There are two transducers (menu **conF** > **C0** = **r2**), the controller automatically selects the transducer with the higher signal (menu **conF** > **C1** = **hi**). If only one transducer is connected, always use input **IN1** and configuration **G1**/**rP1**.

6.3.2 Transducer connection with output 0-5/0-10 V dc

The diagram below shows the connection of two pressure transducers with output 0–5/0–10 Vdc. Transducers can be used to read any magnitude as long as the output is 0–5/0–10 Vdc and the power supply is 5/10 Vdc. The display shows volt or bar according to the default configuration. The VR communication between +5.0 Vdc and +10.0 Vdc is automatic.

This connection requires the use of **rUu010**, **rUu-05** (Vdc measurements), **rPu030** (bar measurements) configurations.

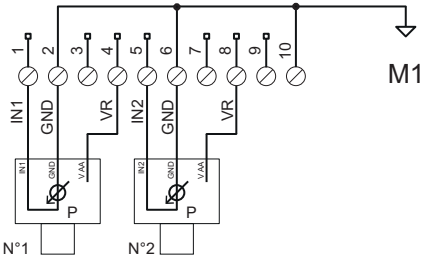

In the default configuration, the setpoint coincides with the maximum fan speed (menu **conF** > **C4** = **hi**), there are two transducers (menu **conF** > **C0** = **r2**), the controller automatically selects the transducer with the higher signal (menu **conF** > **C1** = **hi**).

6.3.3 Connection to NTC probe with 10 kΩ @ 25 °C ohm value

The connection of two NTC 10K @ 25 °C probes is illustrated in the diagram. Only this type of NTC probe can be used. The display is in °C.

This connection requires the use of **rtE-01** and **rtE-02** (measurements in °C) configurations.

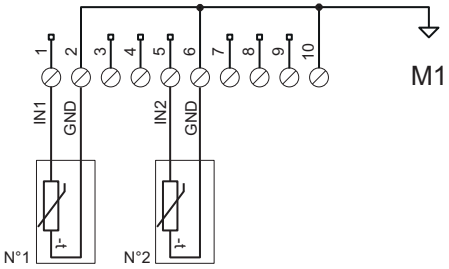

In the default configuration, the setpoint coincides with the maximum fan speed (menu **conF** > **C4** = **hi**), there are two probes (menu **conF** > **C0** = **r2**), the controller automatically selects the probe with the higher signal (menu **conF** > **C1** = **hi**). If only one sensor is connected, the system automatically selects the one present.

6.4 On/Off inputs connection

6.4.1 Diagram

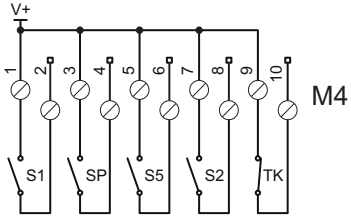

6.5 OUT analog output connections

6.5.1 Power Slave unit connection

This connection is indicated for a Master unit or one or more Slave power units.

Parameter **C7**=0 enables **OUT** analog output and transmits the direct regulation command (parameter **Co**) to the connected Slave units, setting the same operating speed for all connected fan units.

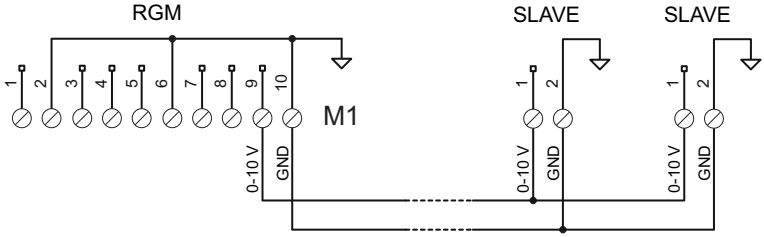

6.5.2 Connection to Water Spray unit

This connection is indicated to coordinate fan system and spray unit operations that increase heat exchanger heat power. You can connect three different Water Spray unit models:

- AFS: for single-spray ramp on/off control
- AWS100: for On/Off control from 1 to 3 spray ramps of 1 or 2 modulating valves.
- WS100-180: for On/Off control from 1 to 4 spray ramps (product replaced by AWS100).

The **C7**= 1 parameter (default) enables the OUT analog output to transmit the spray unit regulation control, making a work area defined by the **USP** setpoint and **UPb** proportional band for external units available. This work area overlaps by integrating with the fan work area.

USP is set by deviation (+/-) from the reference setpoint (**S1** or **S2**) for fans.

Connection diagram to AFS units

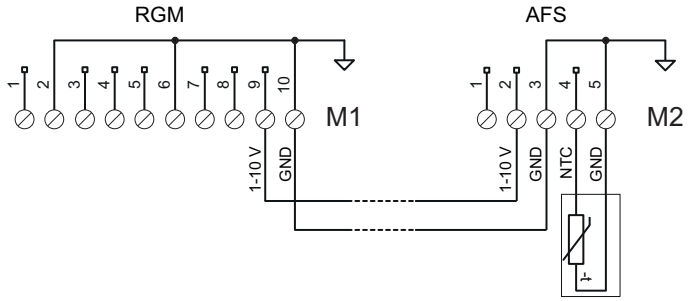

Connection diagram to AWS100 unit

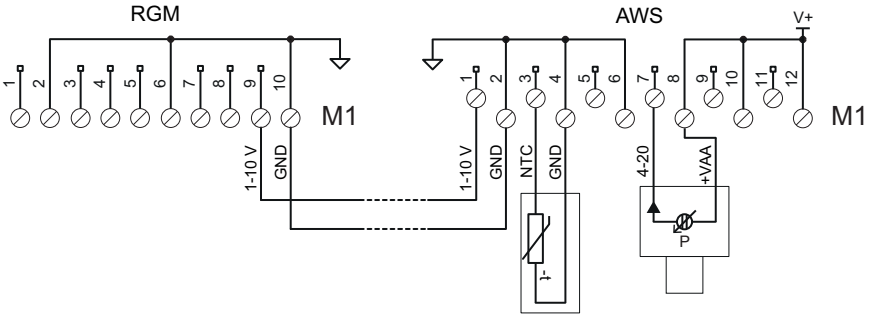

Connection diagram to WS100-180 unit

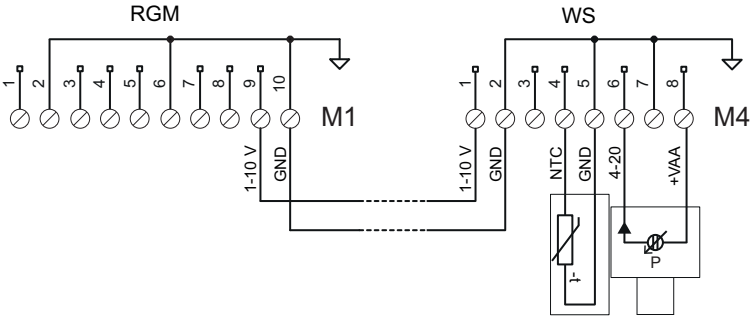

6.5.3 Motorized valve actuator connection

This connection is used to coordinate the operation of the ventilation system with a motorized actuator (valve, damper, etc.) with programmable working range.

The **C7**= 2 or 3 parameter enables the OUT analog output to control an actuator, or motorized valve, and makes a work area defined by the **USP** setpoint and the **UPb**proportional band available for external units and proportional regulation in direct or reverse mode. This work area interacts by overlapping and integrating in the fan work area.

USP and **UPb** are set by deviation (+/-) from the reference setpoint (**S1** or **S2**) for fans.

***Note**: set parameter **C7** = 3 for reverse regulation.*

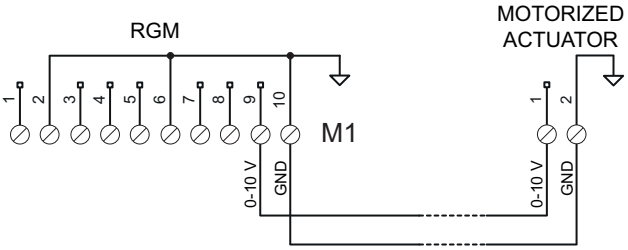

6.6 Relay output connection

6.6.1 Connection to external systems for communicating alarms, faults or operating states.

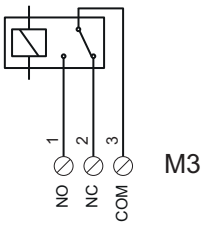

6.7 RS485 Modbus RTU network connection (optional)

6.7.1 Correct connection steps

***NOTICE**: follow the indicated steps for correct Modbus connection operations.*

1. Use an outdoor cable specific for outdoor applications with **length under 1000 meters**, for example, a serial cable for LAN ITC BELDEN 15S7D networks (see specifications "BELDEN cable specifications for RS485 connection" on page 68).
2. Make sure the RS-485 line is correctly connected: all network **D0+** terminals must **all be connected to the same conductor**, the same for **D0-** and **REF0** terminals.
3. Lay the data line cable (Modbus network) **from an RGM device to the next**, starting from the Master unit and ending with the last serviced device. Other wiring methods are not permitted.
4. Ensure **sufficient distance between the Modbus network cable and other system cables**, especially from mains cables.
5. **Terminate line ends** (the Master and last serviced device) **with a 120 Ω resistance** (**Rt**). Enable the 120 Ω termination on the RS-485/PC-Host adapter.
6. **On the last line device** turn the **J1** jumper to 2-1 (ON). **On all other devices** turn the **J1** jumper to 2-3 (OFF).
7. Ground the cable shield starting from the RS-485/PC-Host insulated adapter **only near the adapter**: the cable will be divided into sections, one for each segment. **Do not connect the REF0 shield** at any point.
8. **Connect the first segment shield to the second shield** and so on. The last segment on the last device side shield remains free.

6.7.2 RS485 Modbus RTU network wiring diagram

***NOTICE**: the network cable must be connected as indicated in the diagram. Other wiring methods are NOT permitted.*

