6. Connections

6.1 Power supply wiring and power output for motor(s)

6.1.1 Power wiring diagram and single output load (RDM308, RDM312, RDM320)

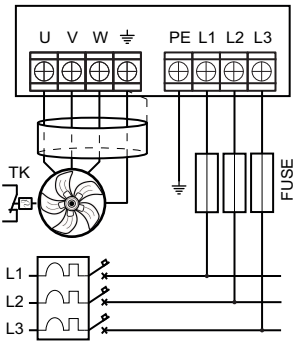

6.1.2 Power wiring diagram and output x4 load (RDM308, RDM312, RDM320)

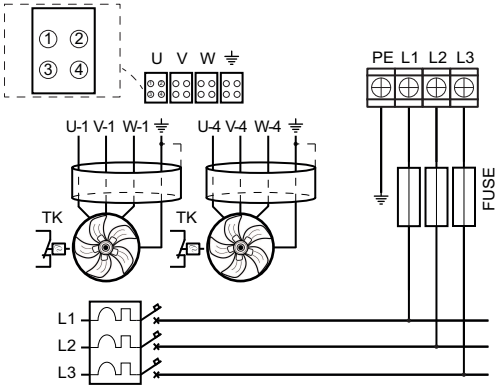

6.1.3 Power wiring diagram and single output load (RDM320 and RDM328)

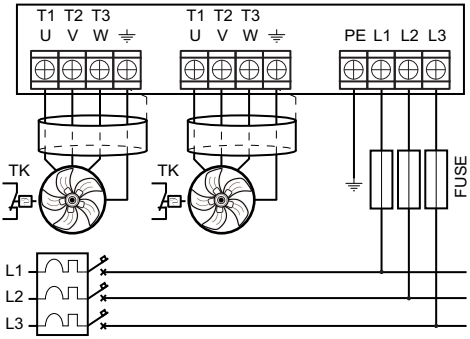

6.1.4 Power wiring diagram and output x 8 load (RDM320 and RDM328)

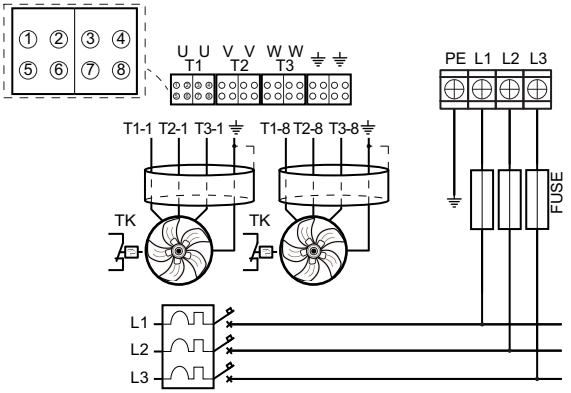

6.2 Connecting analog inputs in Slave mode

***NOTICE**: for connections longer than 30 m, use a shielded cable and connect the shield directly to ground.*

6.2.1 Connection for Slave unit with 0-10 V dc input

The connection of a potentiometer for manual control or, alternatively, a remote controller with 0–10/10–0 Vdc output is illustrated in the diagram. If you use a shielded cable, ground the shield directly.

This connection requires the use of the configuration **rS 010**.

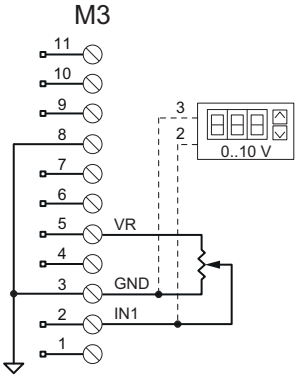

6.2.2 Connection for Slave unit with input 4–20 mA

The connection of a potentiometer for manual control or, alternatively, a remote controller with 4–20/20–4 mA output is illustrated in the diagram.

This connection requires the use of the configuration **rS 420**.

Signal taken from + 24 Vdc

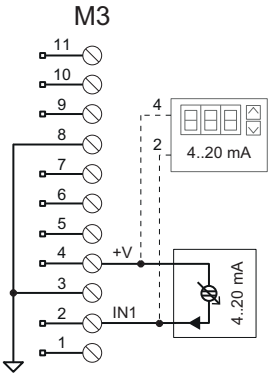

With grounded return signal

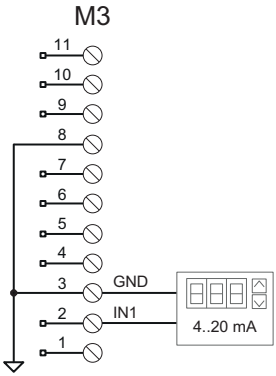

6.2.3 Connection for Slave unit with PWM input

The connection to a remote connection with PWM 3-30 V/10 mA output is illustrated in the diagram.

This connection requires the use of the configuration **rS PWM**.

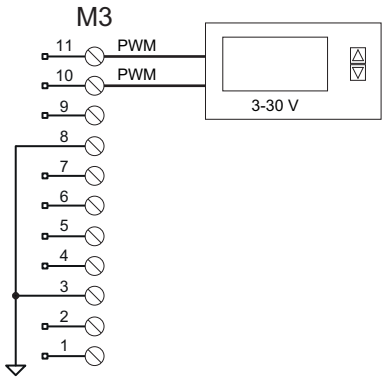

6.3 Analog input connections in Master mode

***NOTICE**: for connections longer than 30 m, use a shielded cable and connect the shield directly to ground.*

6.3.1 Connection to two transducers with 4-20 mA output

The diagram shows the connection of two pressure transducers with 4–20 mA output. Transducers can be used to read any magnitude as long as the output is 4-20 mA and the supply +20 Vdc. The display shows mA or bar according to the default configuration.

This connection requires the use of **rPr420** (mA measurements), **rPr015**, **rPr025**, **rPr030**, **rPr045** and **rPr050** (bar measurements) configurations.

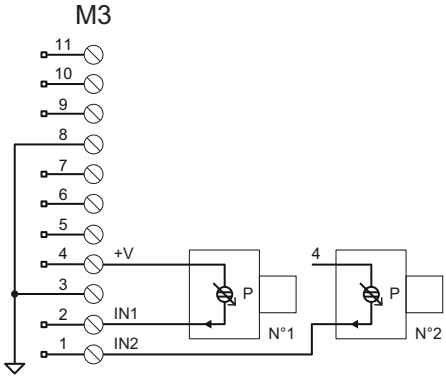

In the default configuration, the setpoint coincides with the maximum fan speed (**hi**). It calls for two transducers; the controller automatically selects the transducer with the greater signal. If only one transducer is connected, always use input **IN1**.

6.3.2 Transducer connection with output 0-5/0-10 V dc

The diagram below shows the connection of two pressure transducers with output 0-5/0-10 V dc. Transducers can be used to read any magnitude as long as the output is 0–5/0–10 V dc and the

power supply is 5/10 V dc. The display shows volt or bar according to the default configuration. The VR communication between +5.0 V dc and +10.0 V dc is automatic.

This connection requires the use of **rUu010**, **rUu-05** (V dc measurements), **rPu030** (in bar) configurations.

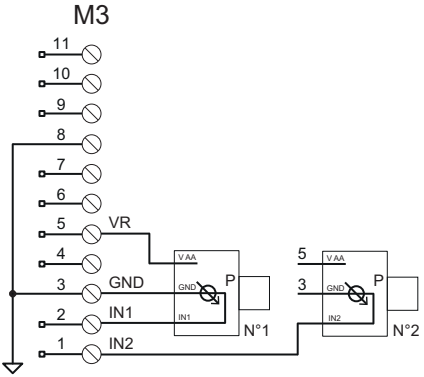

In the default configuration, the setpoint coincides with the maximum fan speed (**hi**). It calls for two transducers; the controller automatically selects the transducer with the greater signal.

6.3.3 Connection to NTC probe with 10 kΩ @ 25 °C ohm value

The connection of two NTC 10K @ 25°C probes is illustrated in the diagram. Only this type of NTC probe can be used. The display is in °C.

This connection requires the use of **rtE-01** (measurements in °C) configuration.

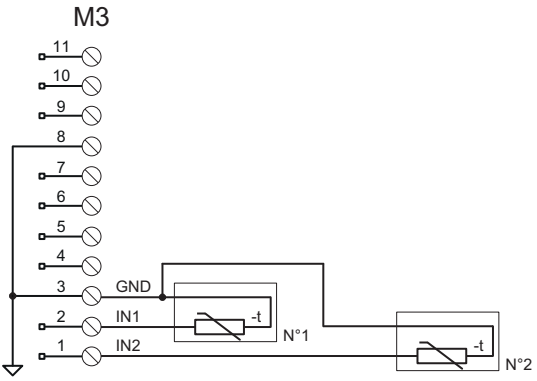

In the default configuration, the setpoint coincides with the maximum fan speed (**hi**). It calls for two probes; the controller automatically selects the probe with the greater signal. If only one sensor is connected, the system automatically selects the one present.

6.4 Auxiliary On/Off inputs connection

6.4.1 Start/stop and TK/Lh contacts connection

The figure shows the contact connections for the remote Start/Stop command or for the defrost function, see "Defrost and snow-free operation" on page 37 and the contact for the connection of the motor overload protections or for activation of the night speed limit **Lh**. The function of the contact can be configured with DIP switch SW1. See "DIP switch SW1" on page 13.

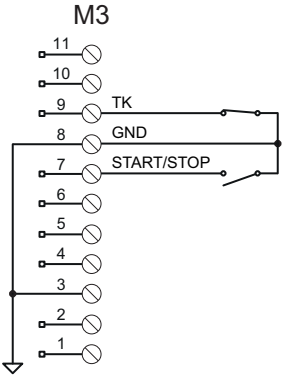

6.5 OUT analog output connections

6.5.1 Power Slave unit connection

This connection is indicated for a Master unit or one or more Slave power units.

The connection enables the **OUT** analog output to transmit the direct regulation command to the connected Slave units, setting the same operating speed for all connected fan units. The signal on the OUT analog output allows the connected slave unit to receive a commanded related to the fan speed control:

- If the controller is in “Slave” mode, see "Control output OUT 0-10 V" on page 31.
- If the controller is in “Master” mode, see "Master proportional mode" on page 31

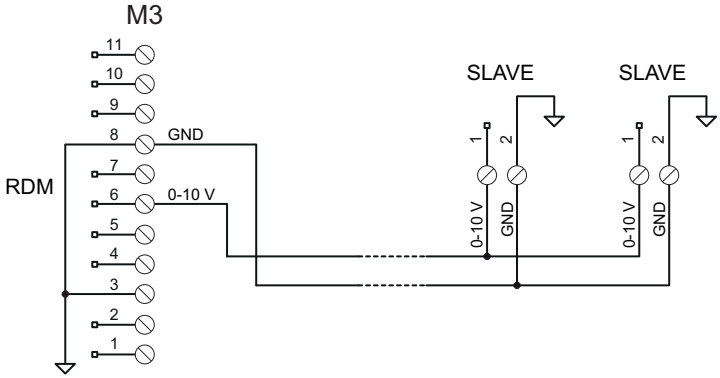

6.6 Relay output connection

6.6.1 Connection to external systems for communicating alarms, faults or operating states.

