7. Manual output control

Manual relay and static power output control; lets you check correct wiring and operations of the actuators used. Specifically, you can control relays RL1, RL2, RL3, RL4, RL5, RL6 and static outputs “A - Open”, “A - Close”, “B - Open” and “B - Close”. The current status of the selected output is displayed. This can be changed by pressing “**ENTER**”. The output changes status whenever the key is pressed.
The “**6.11 Calibration”** function lets you power the system, close drains and force maximum valve A and B opening, and to read the corresponding QA and QB flow rates to calibrate any downstream flow balancing valves.
From version 2.0 of the EPS firmware, the temperature and pressure values can be viewed with Imperial units of measure (°F and psi). Therefore, where the text indicates the unit of measure available in °C, it is considered to be °F, and where bar is indicated, it is considered to be psi. For the conversion values, use the following formulas: °F = 32 + (°C x 9/5), psi = bar x 14.5.

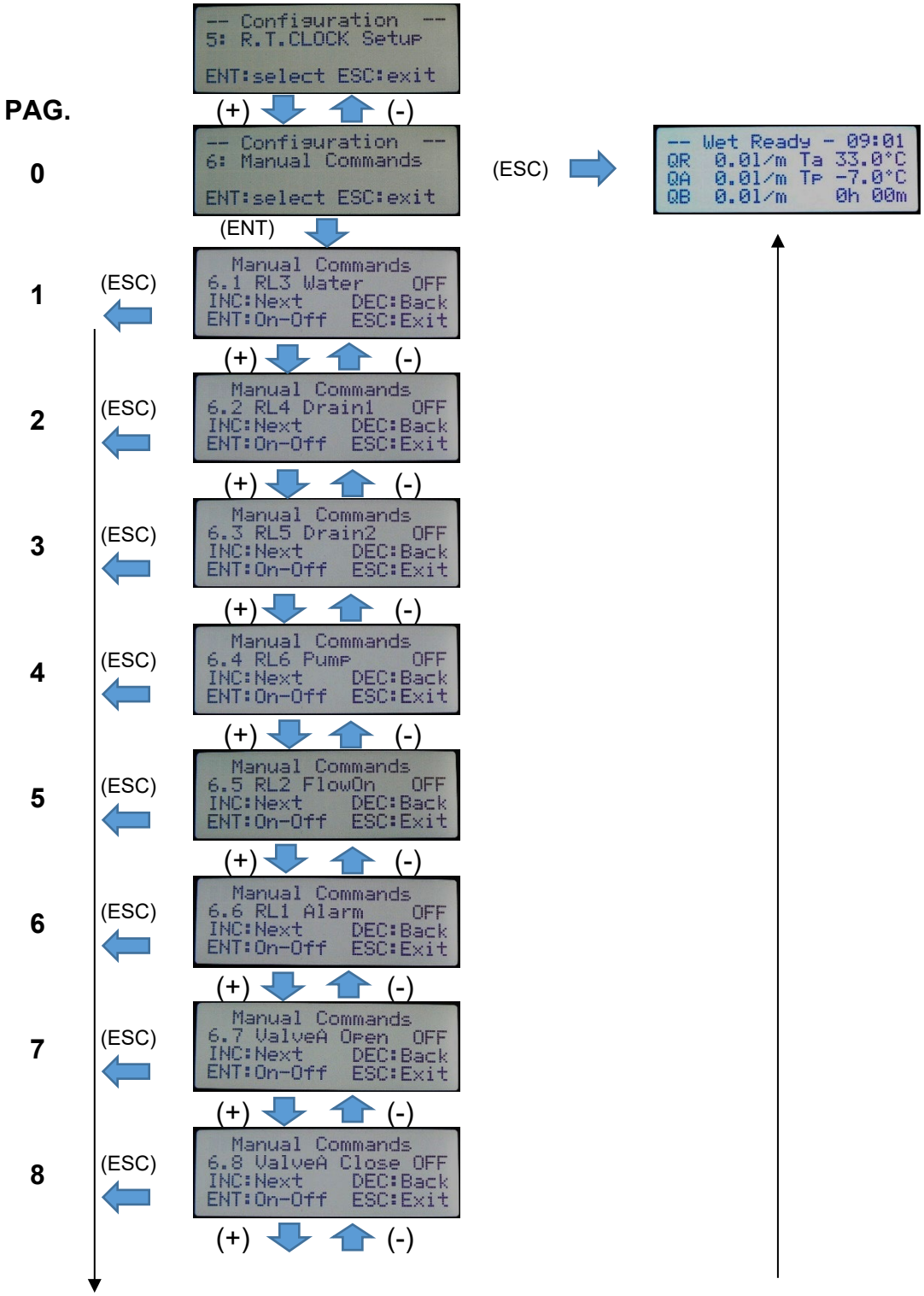

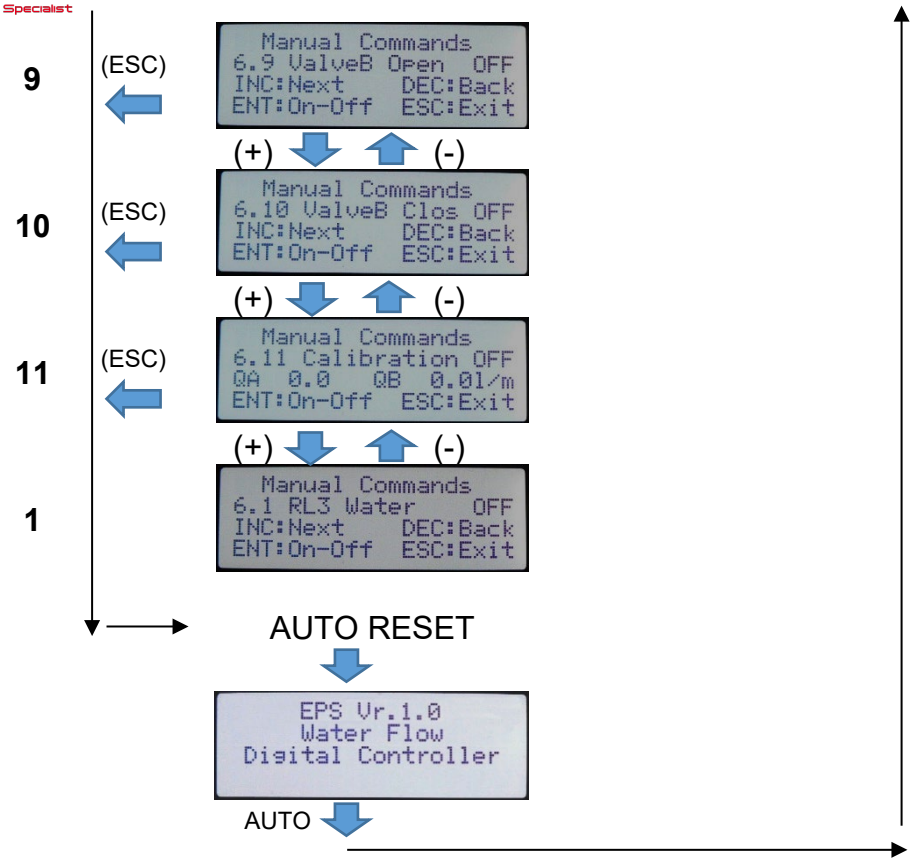
9
(ESC)
Manual Commands
6.9 ValveB Open OFF
INC:Next DEC:Back
ENT:On-Off ESC:Exit
(+)
(-)
10
(ESC)
Manual Commands
6.10 ValveB Clos OFF
INC:Next DEC:Back
ENT:On-Off ESC:Exit
(+)
(-)
11
(ESC)
Manual Commands
6.11 Calibration OFF
QA 0.0 QB 0.0l/m
ENT:On-Off ESC:Exit
(+)
(-)
1
Manual Commands
6.1 RL3 Water OFF
INC:Next DEC:Back
ENT:On-Off ESC:Exit
AUTO RESET
EPS Vr.1.0
Water Flow
Digital Controller
AUTO