6. Parameters

Device operations are controlled by a series of parameters whose value can be read via the display.
Some of these are read-only, others can be freely modified to adapt device operations to the user's needs. For how to view and modify the value, see the following pages.

From version 2.0 of the EPS firmware, the temperature and pressure values can be viewed with Imperial units of measure (°F e psi). Therefore, where the text indicates the unit of measure available in °C, it is considered to be °F, and where bar is indicated, it is considered to be psi. For the conversion values, use the following formulas: °F = 32 + (°C x 9.5), psi = bar x 14.5.

6.1. List of parameters visible on the display

Starting from the home page (see paragraph 3.1) press the "UP" or "DOWN" keys, the parameters listed below are shown on the display; the bold edging delimits the parameters collected on the same page of the display, in the three rows reserved for them.

Abbreviation	Display	Description
QA **QB** **Tamb** **QR** **Tplenum**	**.....** **hh.mm** **QA** **QB** **Ta** **QR** **Tp** **hhhh,mm**	**Home page**: main information for the user – Device status message – Current Real Time Clock time (hours, minutes) – Water flow supplied at ramp A (l / m) – Water flow supplied at ramp B (l / m) – External temperature (°C/°F) – Reference value of the water flow in l/m to be supplied by the two ramps A and B – Plenum temperature (°C/°F)) – Total hours and minutes of supply to the A.P.s
	Command Input	Value of the 1-10V command from which the Sp is derived in l/m
	Flowmeter A	Output value 0-10V of the ramp A flow rate meter
	Flowmeter B	Output value 0-10V of the ramp B flow rate meter
T Dry	Wet/Dry Temp.	Wet->Dry switch temperature threshold (Wet = Spray on)
T Ice	Ice Alarm T.	Ice alarm threshold temperature
-	-	
VQmax	Level VQmax	Command level percentage to start maximum flow rate
VQmin	Level VQmin	Command level percentage to start minimum flow rate
VQstop	Level VQstop	Command level percentage to start zero flow rate
VQdrain	Level VQdrain	A.P. end activity command level percentage to start automatic drain
T Drain	Drain ON Time	Valve opening time in manual or automatic cycle
D Drain	Drain Wait Time	Automatic drain valve start cycle delay (auto drain)
-	Drain Rate	Automatic drain cycle start frequency in days
-	Drain Start	Automatic drain cycle start time with system idle
-	-	-
Qmax	Flow Max	Maximum water flow, value referred to the **single** adiabatic panel
Qmin	Flow Min	Minimum water flow, value referred to the **single** adiabatic panel
Qprg	Flow Purge	Purge water flow, value referred to the **single** adiabatic panel
Pause	Pause	Idle time, maximum delay between two consecutive valve commands
Filt N	Command Filter	Filter on the 1-10 Vdc command signal, No. of samples used
TPurge	Purging Time	Purge duration with A.P. water at Qprg flow rate
C4	Alarms Page (**)	Alarms page
-	PI Regulator Page	Page with parameters shared by the two ramp A and B flow controllers
-	ModBus Page	Modbus parameter page
-	Real Time Clock Page	Real Time Clock page
TLogic	Board Temp. (°C/°F)	Real-time control board temperature in °C/°F
C3	Row Fan Number	No. of fans for each row on the machine
-	XXXXXX, YY l/m	Belimo flow transducer model, selection according to the number of fans, F.S. in l / m

(*) Alarm Flow = QA and/or QB < -25% QR > +25% QR

6.2. Unmodifiable measured quantities, minimum and maximum values

Abbreviation	Display	Value		Unit of measure
		min	Max	
QA	QA	0.0	99.9	l/m
QB	QB	0.0	99.9	l/m
Ta	Ta	-7.0/19.4 (*)	70.0/158	°C/°F
QR	QR	0.0	99.9	l/m
Tp	Tp	-7.0/19.4 (*)	70.0/158	°C/°F
-	hhhh,mm			hh,mm
IN1	Command Input	0.0	12.0	V
-	Flowmeter A	0.0	12.0	V
-	Flowmeter B	0.0	12.0	V
TLogic	Logic Board Temp. (°C)	-20.0	+90.0	°C
	Flow Transducer Type	FM015R-SZ, FM020R-SZ, FM025R-SZ		-

(*) Probe input not connected to the NTC transducer

6.3. Modifiable operating parameters, default values, minimum and maximum values

Abbreviation	Display		Value			Unit of measure
			Default	min	Max	
T Dry	Wet/Dry Temperature (Hysteresis 1 °C/33.8 °F - 3 °C/37.4 °F)		20/68	4.0/39.2	40.0/104	°C/°F
T Ice	Ice Alarm Temperature (Hysteresis 2 °C/35.6 °F)		8/46.4	2.0/35.6	12.0/53.6	°C/°F
VQmax	Level VQmax		90	15	100	%
VQmin	Level VQmin		70	15	100	%
VQstop	Level VQstp		50	15	100	%
VQdrain	Level VQdrain		20	15	100	%
T Drain	Drain ON Time		600	60	3600	s
D Drain	Drain Wait Time		120	0	240	m
-	Drain Rate		1	0	99	dd
-	Drain Start		22, 00	00.00	23.59	hh, mm
Qmax	Flow Max (*)		3	0.5	9.9	l/m
Qmin	Flow Min (*)		2	0.5	9.9	l/m
Qpurge	Flow Purge(*)		6	0.5	9.9	l/m
Pause	Pause		8.0	0.5	30.0	s
Filt N	Command Filter		16	1	20	No.
TPurge	Purging Time		5	0	60	m
-	Alarm In Com		Active	Bypass	Active	-
-	Alarm Ice Tem		Active	Bypass	Active	-
-	Alarm Flow		Active	Bypass	Active	-
P	Proportional constant	**22PF-1UC (DN15)**	-	0.1	25.2	l/m
		22PF-1UD (DN20)	-	0.1	46.8	l/m
		22PF-1UE (DN25)	-	0.1	82.8	l/m
I	Integral Constant		1	0	1000	-
Ti	Integration time		10	0	100	s
MBtype	ModBus Address		247	1……..247		-
MBrate	Baud rate		19200	4800, 9600, 19200, 38400		-
MBtype	Type		8E1	8N1, 8E1, 801		-
	Real Time Clock Page		-	hh,mm,ss dd/mm/yy		-
N	Row Fan Number		5	1	10	No.

(*) Value referred to the **single** adiabatic panel

6.4. Recall Default Configurations, Operation Mode Menu

Set the operating configuration corresponding to the intended use before starting the system!

The following procedure allows you to choose one of the 10 default configurations provided, which differ by the number of "Fan Row" fan copies used and by the model of the two flow transducers to be combined with the EPS.
N.B. This procedure is also useful for reloading the default values

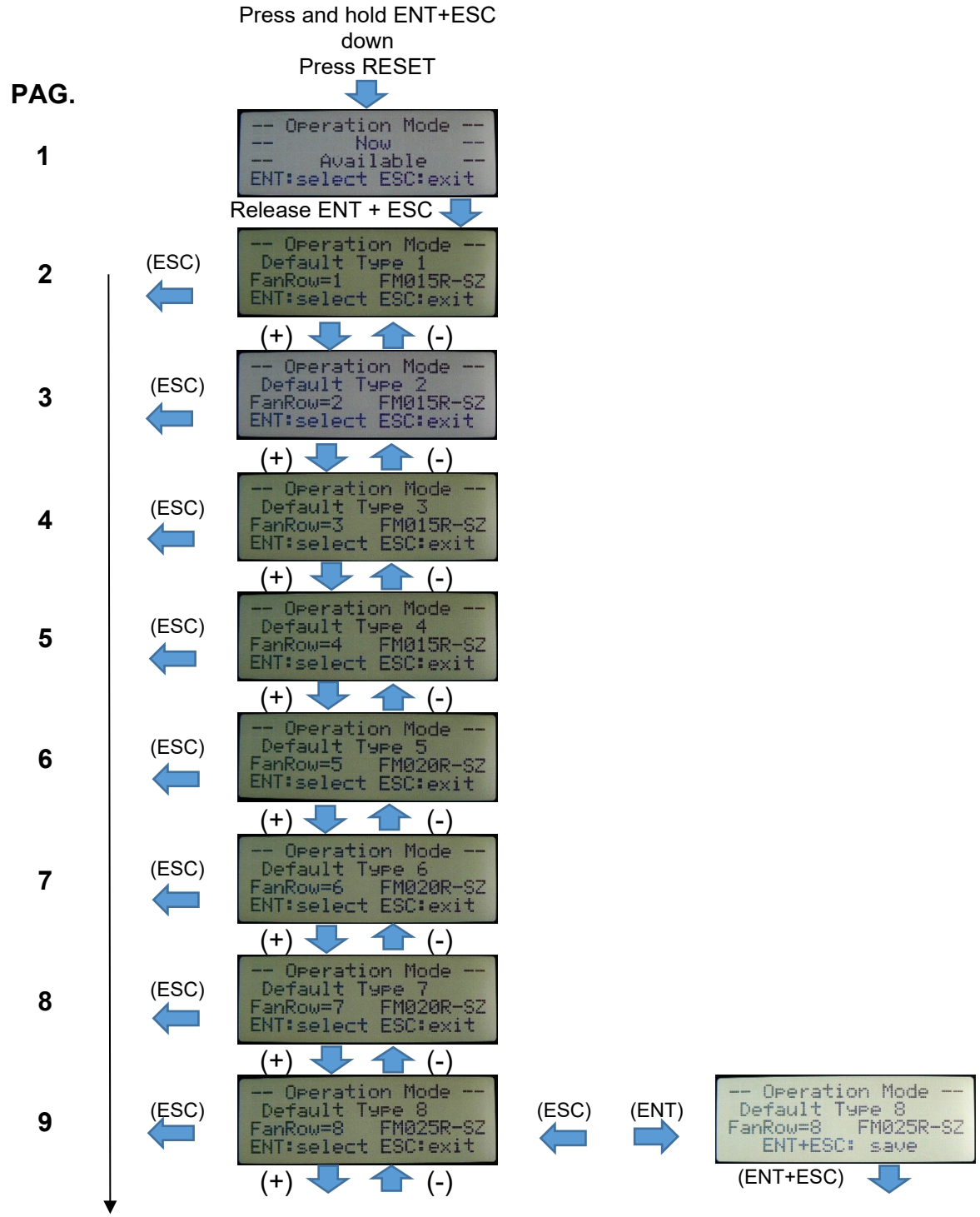

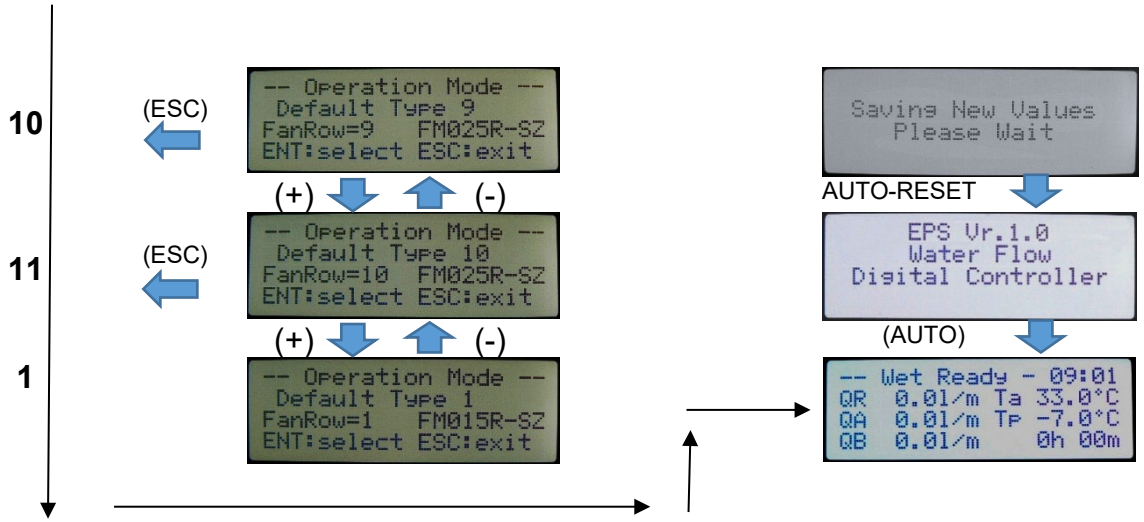

Changing the "Default" Configuration

A. Hold down the "**ENT**" and "**ESC**" keys, quickly press the **SB1 = "RESET"** key. Page 1 appears. Release the "**ENT**" and "**ESC**" keys. Page 2 appears

B. Scroll through pages **2** to **11** on the display with the "**UP**" and "**DOWN**" keys, with the number of "Fan Row" fan pairs growing from 1 to 10 to then return to 1.

C. Once the required configuration is identified, press "**ENTER**" and the "**ENT+ESC=save**" message appears on the fourth row of the display.

D. To exit and discard changes, press the **ESCAPE** key to go back one step.

E. To confirm the selection, simultaneously press "**ENT + ESC"**: the "**Saving new values, Please wait**" message appears on the display. The configuration selected is immediately used, **deleting the previous one**, along with all the changes that may have been made.

F. The controller enters regulation and the HOME page of the INFO menu appears on the display.

6.5. Display Parameters, Home & Info Menu, Edit Parameters Configuration Menu

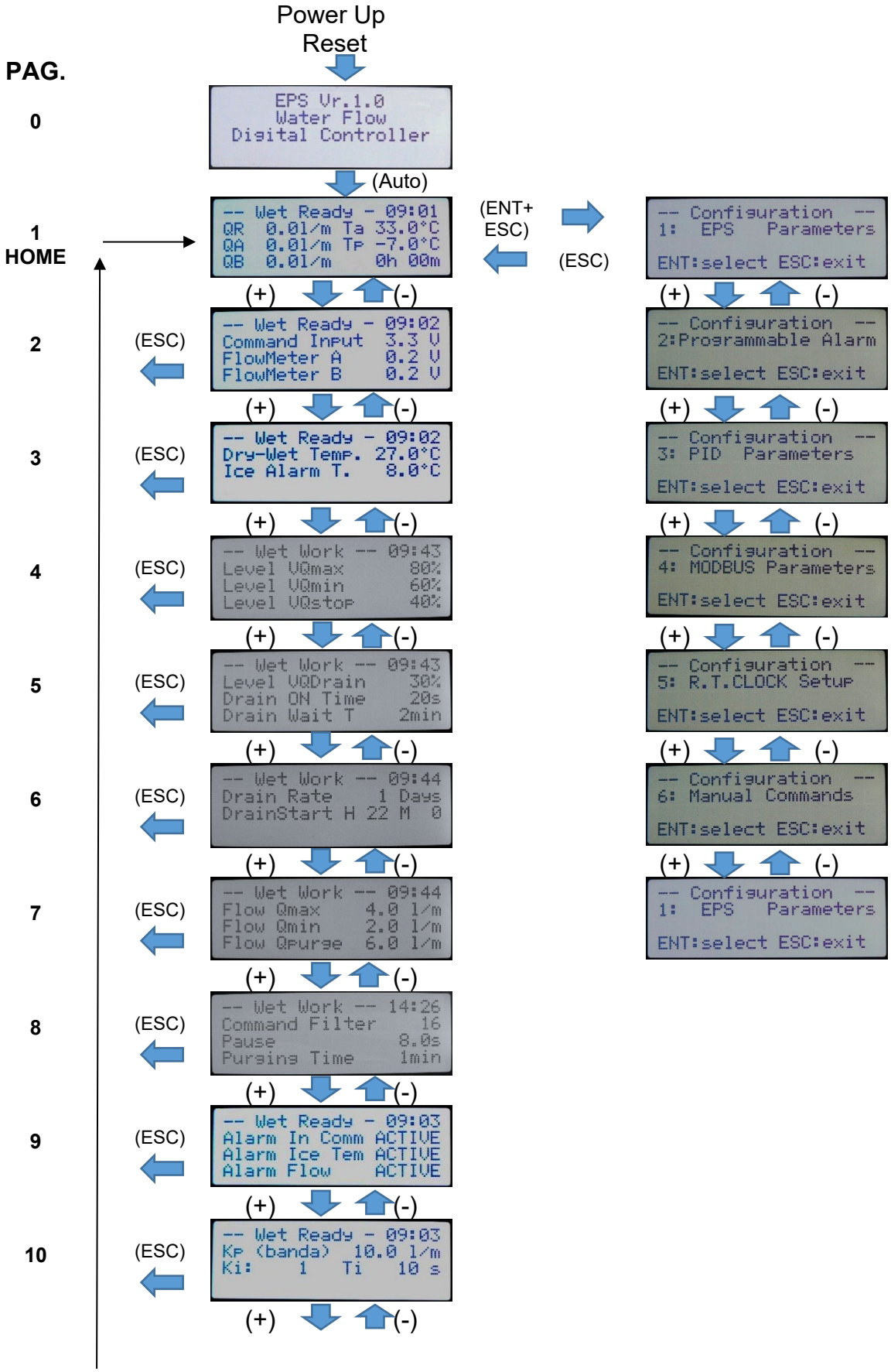

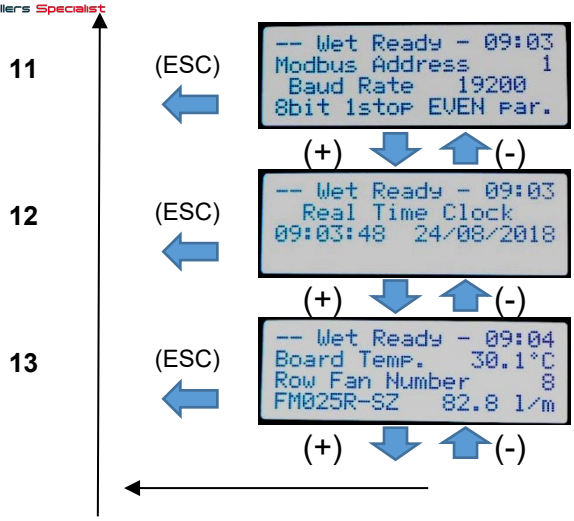

A. At start-up, or after reset, page 0 appears for a moment, and then automatically switches to page 1 "**HOME**" with the basic information on the EPS operating status, see Chapter 4 and Chapter 6.

B. Press the "+" or "-" keys to display the next or previous pages containing the values of the other parameters, Chapter 6.

C. Press the "ESC" key on any display page to return to HOME

D. To edit one or more parameters, press the "**ENT + ESC**" keys simultaneously. The "**1 – EPS Parameters**" page appears on the display: the first page in the **"Configuration"** menu. For further instructions, see the following paragraphs.

E. To select one of the sub-menus available, press the "+" or "-" keys.
Once the sub-menu has been identified, to access it, press the "**ENTER**" key.

F. Instead, to return "HOME", press "ESC".

6.5.1. “EPS Parameters”

This sub-menu allows you to read and edit EPS device operating parameters

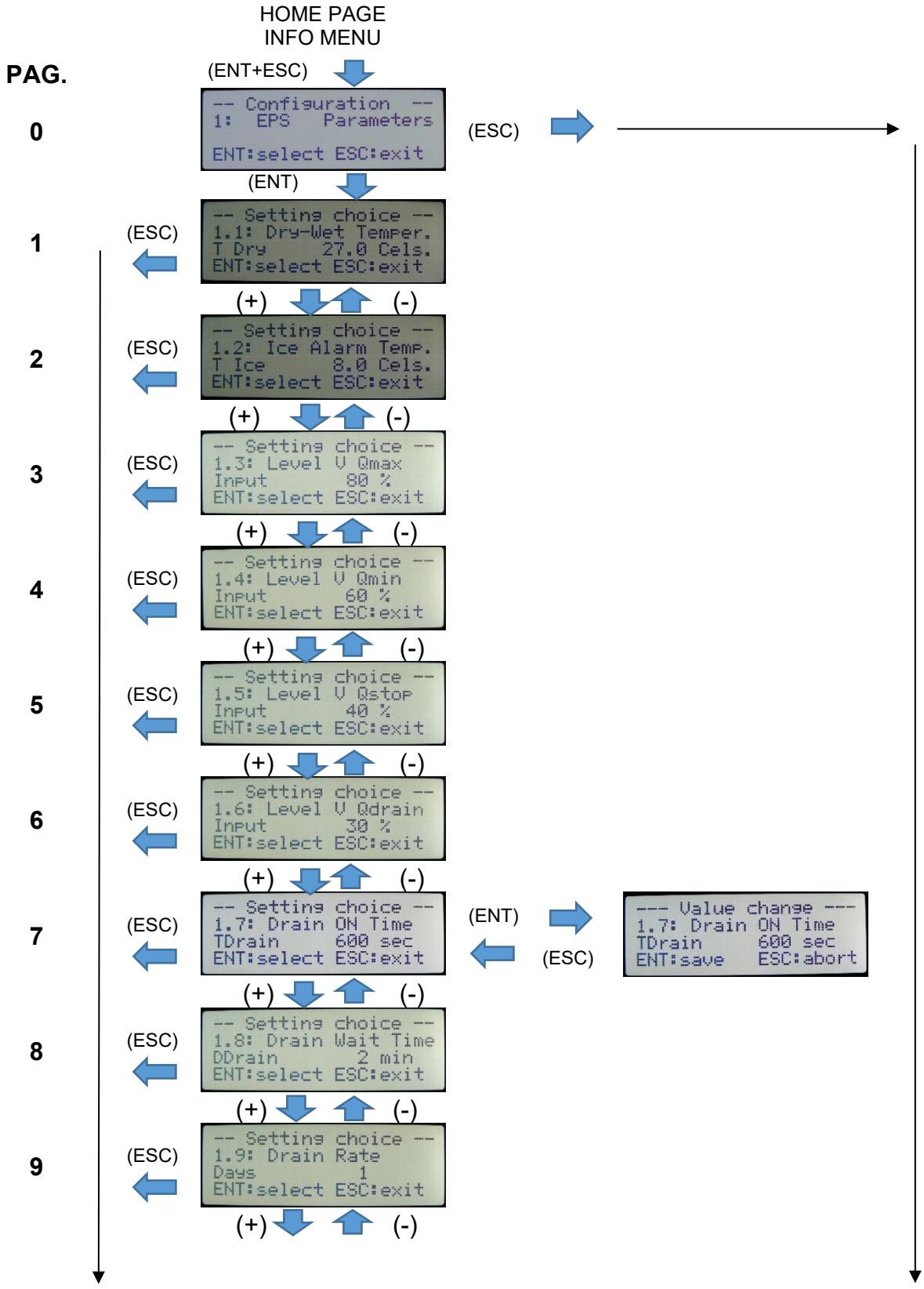

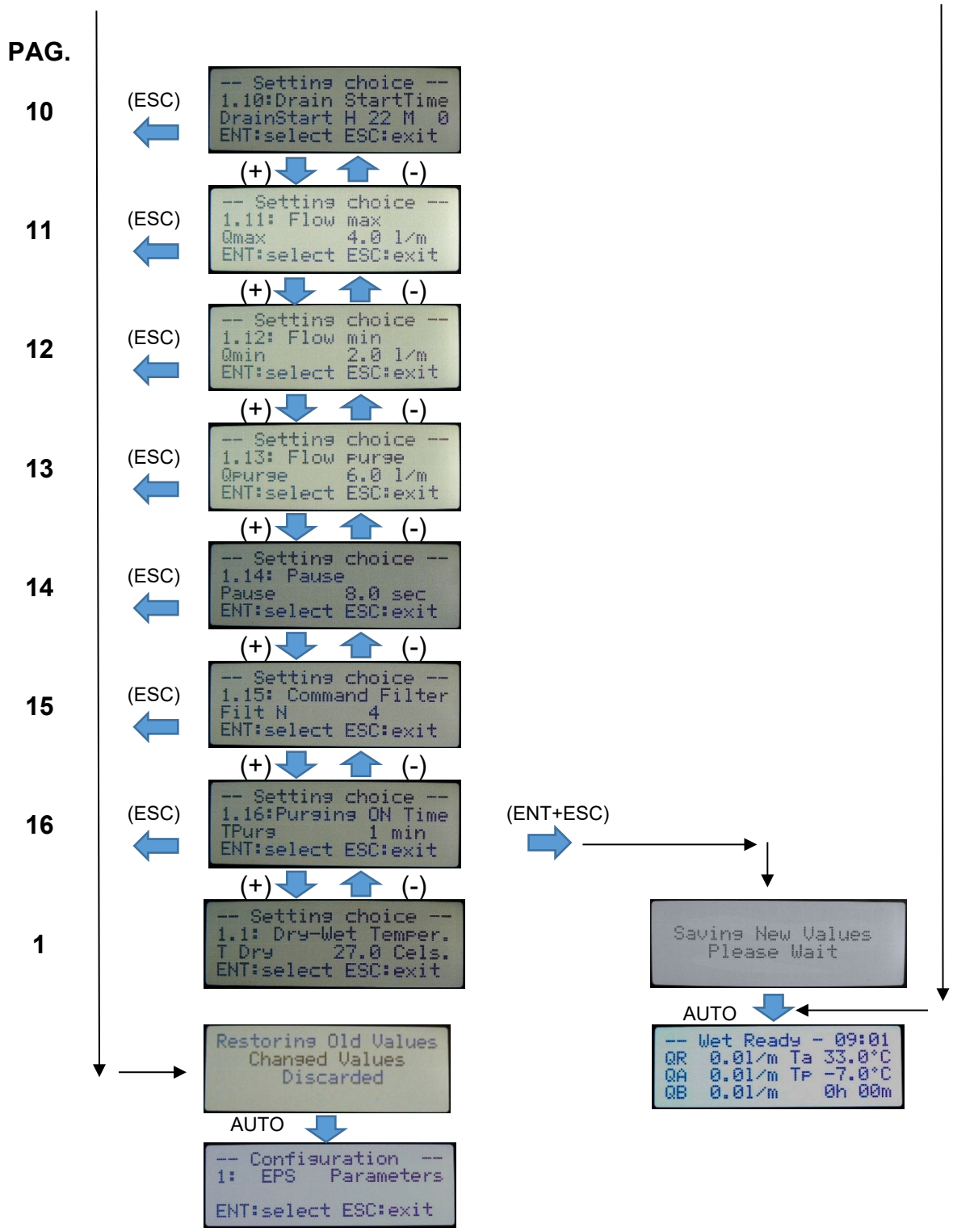
PAG.
10
11
12
13
14
15
16
1
(ESC)
(+)
(-)
-- Setting choice --
1.10:Drain StartTime
DrainStart H 22 M 0
ENT:select ESC:exit
-- Setting choice --
1.11: Flow max
Qmax 4.0 l/m
ENT:select ESC:exit
-- Setting choice --
1.12: Flow min
Qmin 2.0 l/m
ENT:select ESC:exit
-- Setting choice --
1.13: Flow purge
Qpurge 6.0 l/m
ENT:select ESC:exit
-- Setting choice --
1.14: Pause
Pause 8.0 sec
ENT:select ESC:exit
-- Setting choice --
1.15: Command Filter
Filt N 4
ENT:select ESC:exit
-- Setting choice --
1.16:Pursing ON Time
TPurg 1 min
ENT:select ESC:exit
-- Setting choice --
1.1: Dry-Wet Temper.
T Dry 27.0 Cels.
ENT:select ESC:exit
Restoring Old Values
Changed Values
Discarded
AUTO
-- Configuration --
1: EPS Parameters
ENT:select ESC:exit
(ENT+ESC)
Saving New Values
Please Wait
AUTO
-- Wet Ready - 09:01
QR 0.0l/m Ta 33.0°C
QA 0.0l/m Tp -7.0°C
QB 0.0l/m 0h 00m

A. Starting from sub-menu page No. 1, “Configuration, 1: EPS Parameters”; press “**ENT**” to display page 1; the “**Setting choice**” message appears in the first row.

B. Scroll the display with the “**UP**” or “**DOWN**” keys. The following pages from 2 to 16 contain the descriptions and the values of the other parameters. If you go further you return to page 1.

C. After selecting the required parameter, for example “**1.7: Drain ON Time**”, press **“ENT”**; the message in the first row switches from “**Setting choice**” to “**Value change**”.

D. Use the “**UP**” or “**DOWN**” keys to change the value in row 3 to the desired value. Hold the key down to speed up settings.

A. Press “**ESCAPE**” to discard settings or press “**ENTER**” to confirm changes. The “**Setting choice**” message appears in the first row. If another parameter must be changed, use the “**UP**” or “**DOWN**” keys to select it as described in point “B”.

E. Press “**ESC**” once or twice at any time to return to the sub-menu No. 1 page, “Configuration, 1: EPS Parameters“ and to discard changes.

F. After setting the new values, press the “**ENT**+**ESC**” keys simultaneously to confirm and save the changes. Once saved the “**HOME**” page opens

Edit a parameter

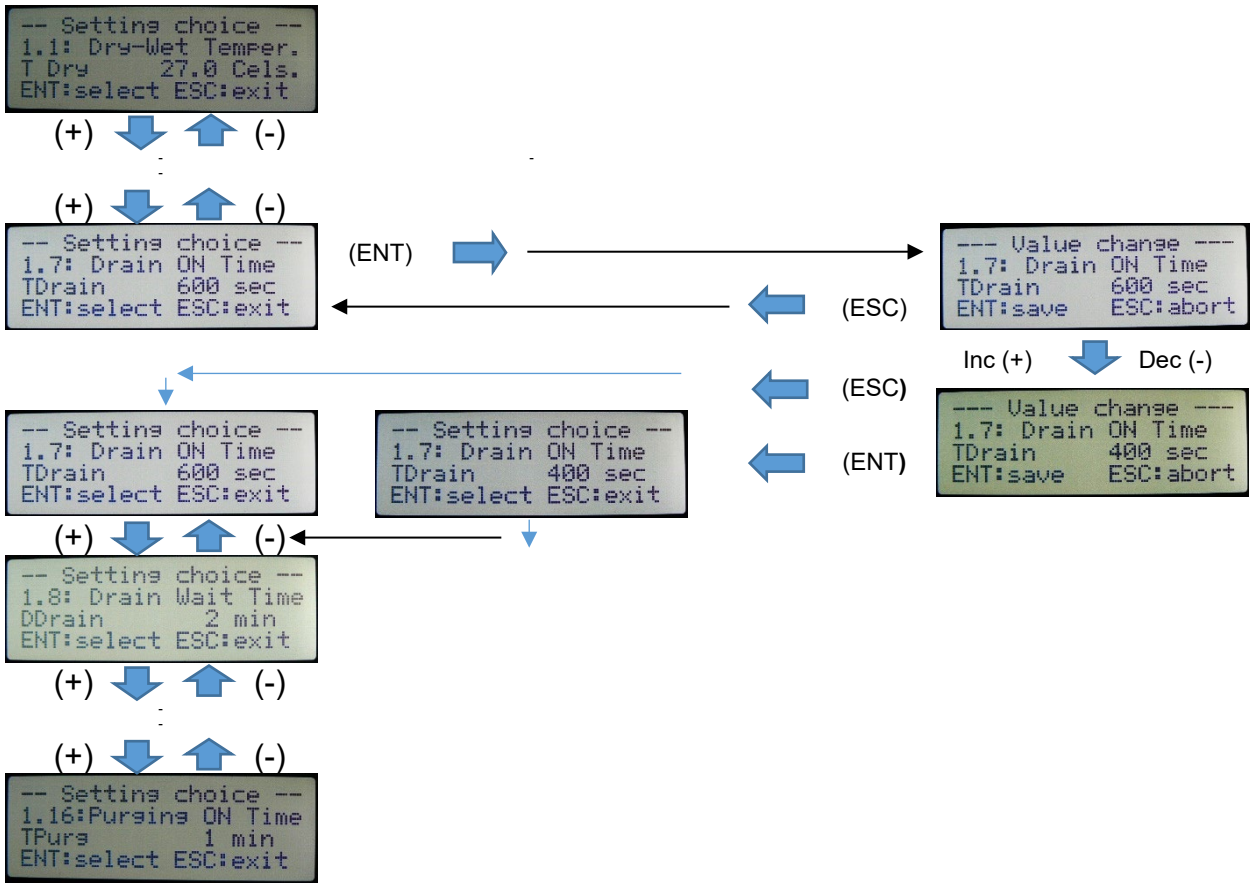

6.5.2. "Programmable Alarm"

It allows you to read, enable or disable programmable alarms.
N.B. By loading a new default configuration, the default alarm configuration is also re-established as per paragraph 6.3

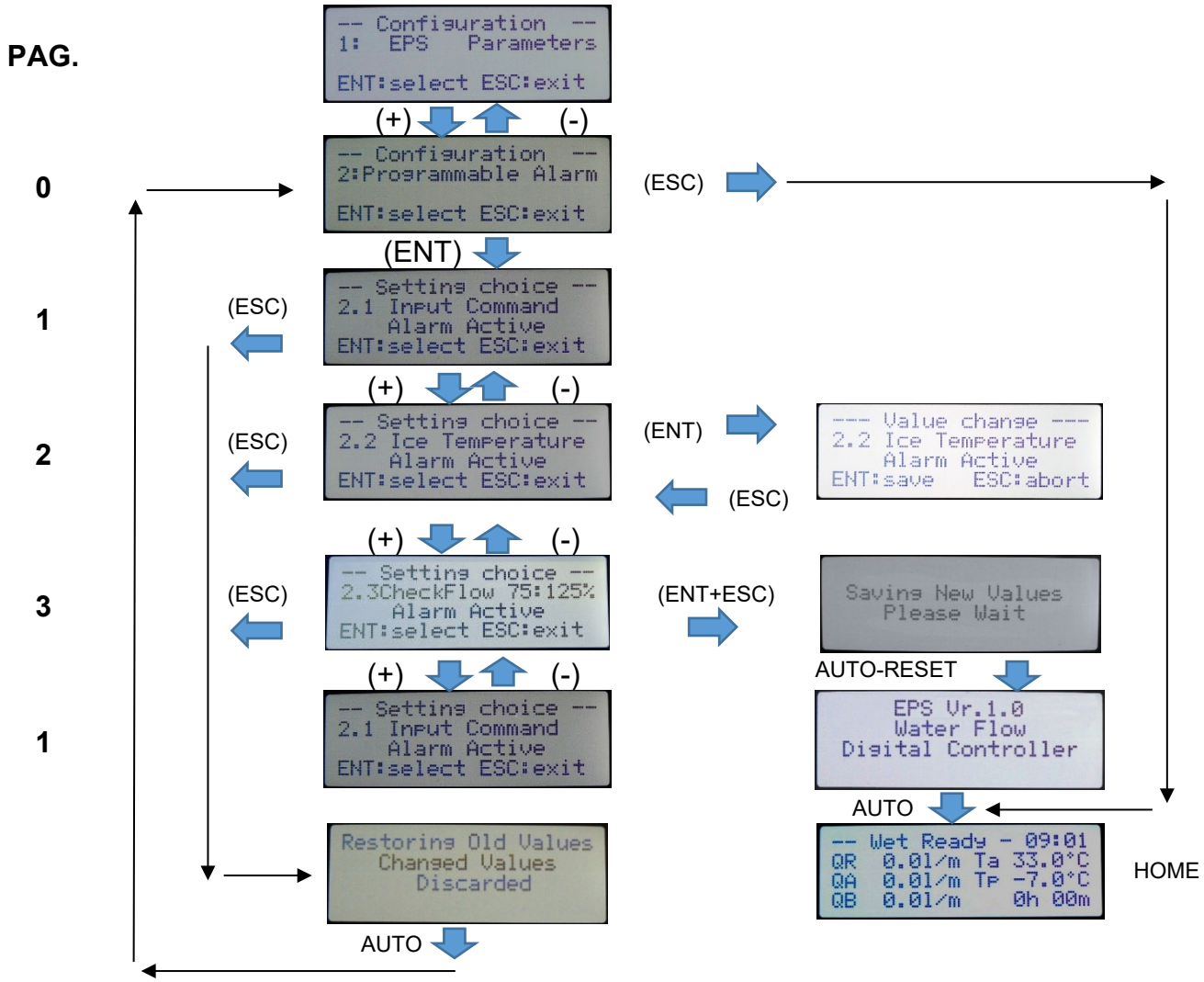

A. Starting from the page in sub-menu No. 2: "Configuration, 2: Programmable Alarm"; press "ENT", page **1** is displayed and the "**Setting choice**" message appears in the first row.

B. Use the "**UP**" or "**DOWN**" keys to scroll forward or back through the following pages **2** and **3** that contain the description and the value of the following parameters. Continue scrolling to return to page **1**.

C. Once the required parameter is selected, for example "**2.2 Ice Temperature**", press "**ENT**"; the "**Setting choice**" message switches to "**Value change**" in the first row. Use the "**UP**" or "**DOWN**" keys to change the value in row No.3 from "**Active**" to "**Bypass**" and vice versa.

D. Press the "**ESC**" key to delete the settings or press "**ENT**" to confirm changes. The "**Setting choice**" message appears in the first row. If another parameter must be changed, use the "**UP**" or "**DOWN**" keys to select it as described in point "B".

E. Press "**ESC**" once or twice at any time to return to the sub-menu No.2 page: "Configuration, 2: Programmable Alarm" and the changes are discarded.

F. After setting new values, press the "**ENT**+**ESC**" keys simultaneously to confirm and save the changes. Once saved the "**HOME**" page opens

6.5.3. "PID Parameters"

It lets you read and change parameters of the two PI flow regulators of the two modulating valves. The two regulators use the same values.

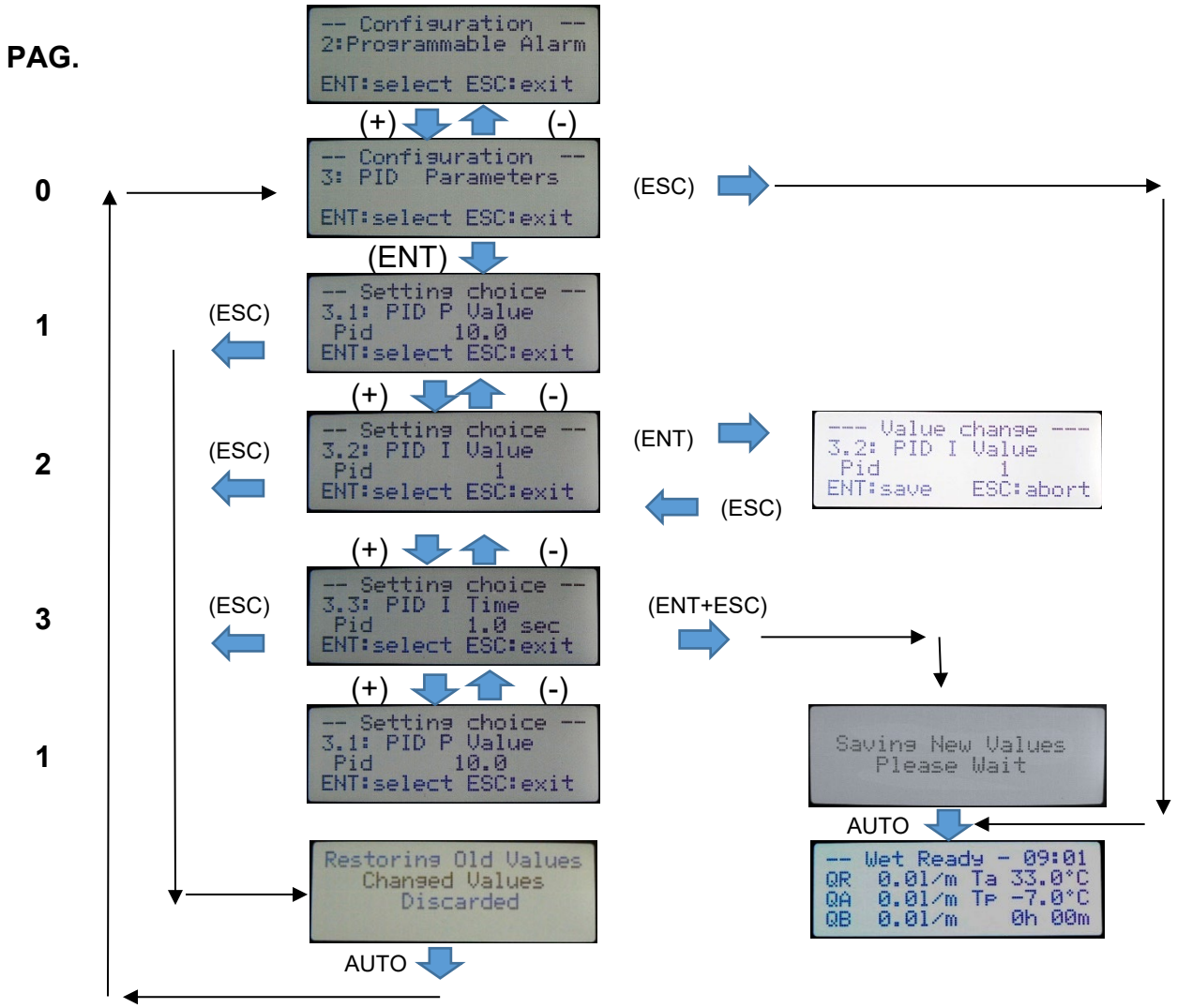

A. Starting from the page in sub-menu No. 3: "Configuration, 3: PID Parameters"; press "ENT" and page **1** is displayed; the "**Setting choice**" message appears in the first row.

B. Use the "**UP**" or "**DOWN**" keys to scroll forward or back through the following pages **2** and **3** that contain the description and the value of the following parameters. Continue scrolling to return to page **1**.

C. Once the required parameter is selected, for example "**3.2 PI I Value**", press "**ENT**"; "**Setting choice**" switches to "**Value change**" in the first row. Use the "**UP**" or "**DOWN**" keys to change the value displayed in row No.3.

D. Press "**ESCAPE**" to discard settings or press "**ENTER**" to confirm changes. The "**Setting choice**" message appears in the first row. If another parameter must be changed, use the "**UP**" or "**DOWN**" keys to select it as described in point "B".

E. Press "**ESC**" once or twice at any time to return to the sub-menu No.3 page: "Configuration, 3 PID Parameters" and the changes are discarded.

F. After setting the new values, press the "**ENT**+**ESC**" keys simultaneously to confirm and save the changes. Once saved the "**HOME**" page opens

6.5.4. "MODBUS Parameters"

The following parameters are for the use of the **RS-485 serial** for the connection to the master unit (PC Host).

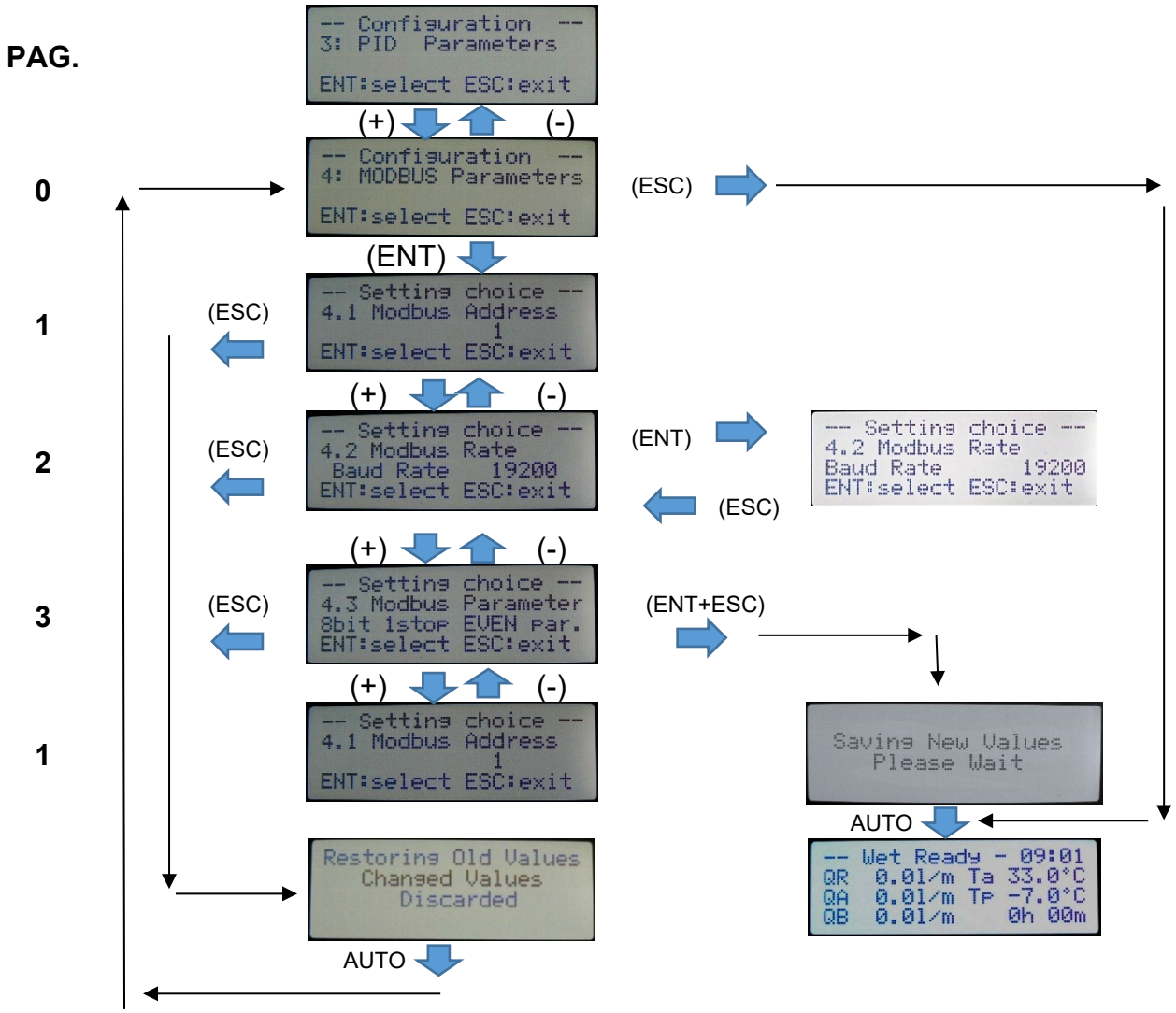

A. Starting from the page in sub-menu No. 4: "Configuration, 4: MODBUS Parameters"; press "ENT" and page **1** is displayed; the "**Setting choice**" message appears in the first row.

B. Use the "**UP**" or "**DOWN**" keys to scroll forward or back through the following pages **2** and **3** that contain the description and the value of the following parameters. Continue scrolling to return to page **1**.

C. Once the required parameter is selected, for example "**4.2 Modbus Rate**", press "**ENT**"; "**Setting choice**" message switches to "**Value change**" in the first row. Use the "**UP**" or "**DOWN**" keys to change the value displayed in row No.3.

D. Press the "**ESC**" key to delete the settings or press "**ENT**" to confirm changes. The "**Setting choice**" message appears in the first row. If another parameter must be changed, use the "**UP**" or "**DOWN**" keys to select it as described in point "B".

E. Press "ESC" once or twice at any time to return to the sub-menu No. 4 page: "Configuration, 4: MODBUS Parameters" and the changes are discarded.

F. After setting new values, press the "**ENT** + **ESC**" to save the changes. Once saved the "**HOME**" page opens.

6.5.5. "RTC: Real Time Clock"

Lets you read and edit the internal clock value (RTC: Real Time Clock).

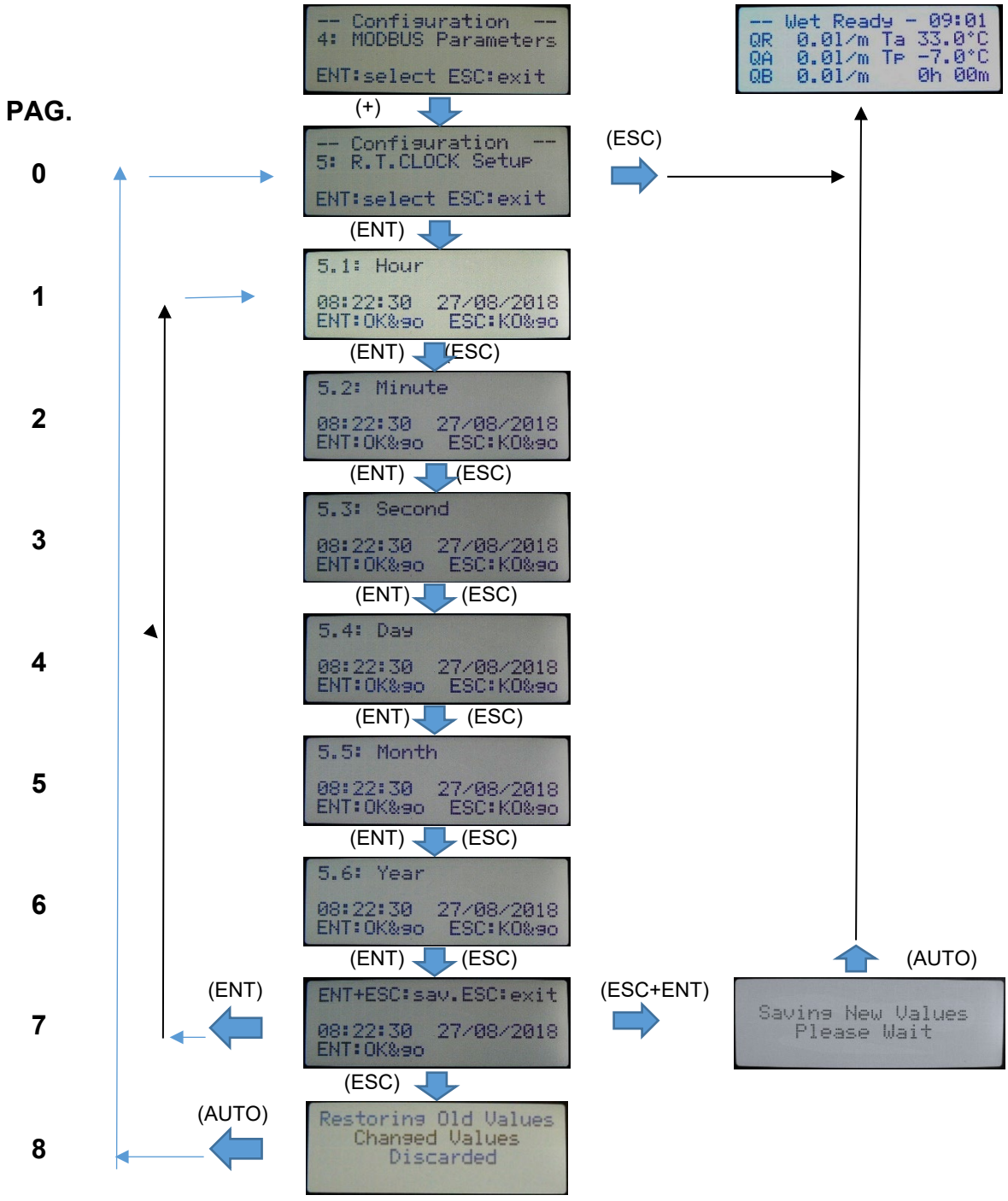

A. Starting from the page in sub-menu No. 5: "Configuration, 5: R.T.CLOCK Setup"; press "**ENT**", to view page **1**, "**5.1 Hour**" appears in the first row, the current value in the third row. During Set-Up, the time remains the input time during set-up plus any changes made.

B. Use the "**UP**" or "**DOWN**" keys to change the hour value, indicated in the third row; press "**ENT**" to switch to minutes saving changes, press "**ESC**" to switch to minutes without saving changes.

C. Continue in the same way for the next pages. Upon reaching the last page, page 7, press "**ENT+ESC**" to save changes and return to the "**HOME**" page. Press "**ENT**" to return to page 1. To discard changes and return to page 0 press "**ESC**".