3. Installation and electric connections

The installation must be performed according to best working practices only by a qualified operator

3.1. Installation

Install the device in environments with a temperature between **-20 °C/-4 °F** and **+50 °C/122 °F**, otherwise the device's proper operation and integrity may be compromised.

If the installation involves exposure to temperatures equal to or less than **-10 °C/14 °F** avoid continuously turning the power to the controller on and off: a constant power supply keeps the controller at working temperature and prevents condensation from forming. To stop operations, use the terminal board contact **S2 = STOP**, see paragraph 3.3.2.

Install the controller in a housing that guarantees the protection rating suitable for the weather conditions, preferably in a location protected from direct sunlight and rain.

3.2. Electric Power Connection

Complete electrical connections with a **1.5 mm² / 22-14 AWG Cu** rated section flexible cable

Make the connection as shown in the following drawings.

The power cables must be installed separately from the signal cables, maintaining a distance of at least 100 mm.
Do not mix power cables and signal cables in the same conduit; in the event of a crossover, install with a 90° angle.
Protect power cables with **2 A / 500 V** delayed fuses.

Before turning on unit power, carefully check the connections made.

If you have a "disturbed" mains power supply, also due to the presence of other electrical power components that make it irregular (for example: power contactors), we recommend installing a supplemental **"surge arrester"** filter directly on the controller power supply.

IP00 version for single-phase supply voltage 24 Vac +/- 10%, 50/60 Hz

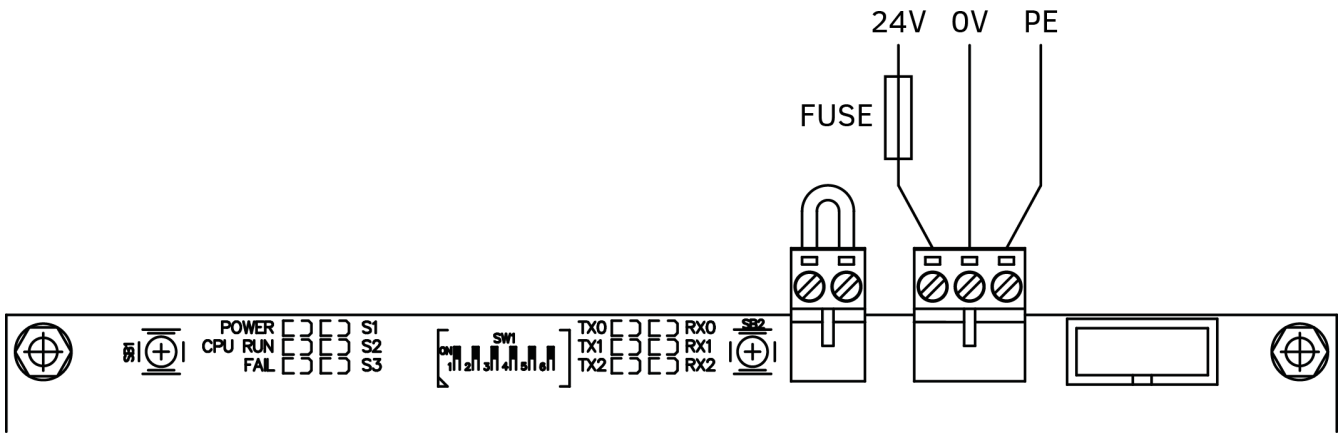

3.3. Sensor and command signal connections

The EPS controller is designed for direct connection of sensors, signals and auxiliary contacts to support regulation.
The figure below shows the details of the connection terminal boards on the board: M1 - M2 - M3 - M4 - M5.

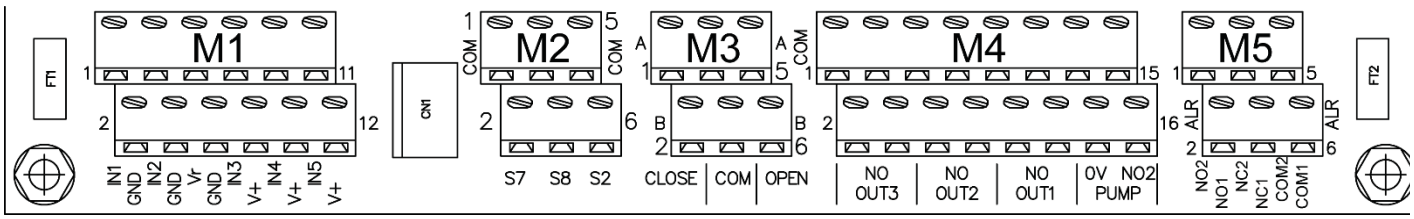

Note: Signal connections longer than 30m must be made with shielded cable, with the shield connected to the ground of the EPS controller.

3.3.1. M1 TERMINAL BOARD: Analog Inputs

The **M1** terminal board is designed to connect the 1-10 Vdc control input and up to four transducers, necessary for device operations.
The table below shows the details of the signals for each terminal and the connection diagrams for the various default configurations available.

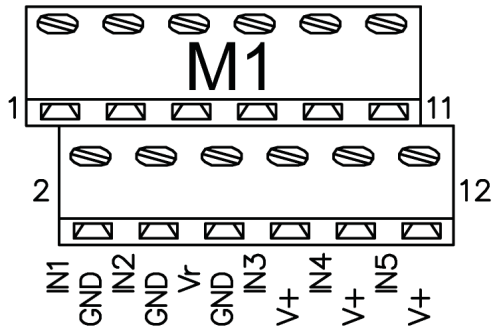

Terminal board M1		Description
1	**IN1**	Analog input 0-10 Vdc for the 1-10 Vdc command signal coming from the fan control regulator (RGM, ECP, ECM, DSV, ...)
2	**GND**	Reference grounding
3	**IN2**	Analog input for NTC 10 kohm @ 25 ° C/77 °F for external temperature reading
4	**GND**	Reference grounding
5	**Vr**	Power output +10 Vdc, max 10 mA, stabilized and protected against short circuit
6	**GND**	Reference grounding
7	**IN3**	Analog input for NTC 10 kohm @ 25 ° C/77 °F for reading the plenum temperature downstream from the A.P.s
8	**+V**	Output +22 Vdc, 40 mA not stabilized for transducer power supply, protected against short circuit
9	**IN4**	0…10V input for **A.P. ramp A nozzle power flow transducer**
10	**+V**	Output +22 Vdc, 40 mA not stabilized for transducer power supply, protected against short circuit
11	**IN5**	0…10V input for **A.P. ramp B nozzle power flow transducer**
12	**+V**	Output +22 Vdc, 40 mA not stabilized for transducer power supply, protected against short circuit

3.3.1.1. Analog signal and transducer connections

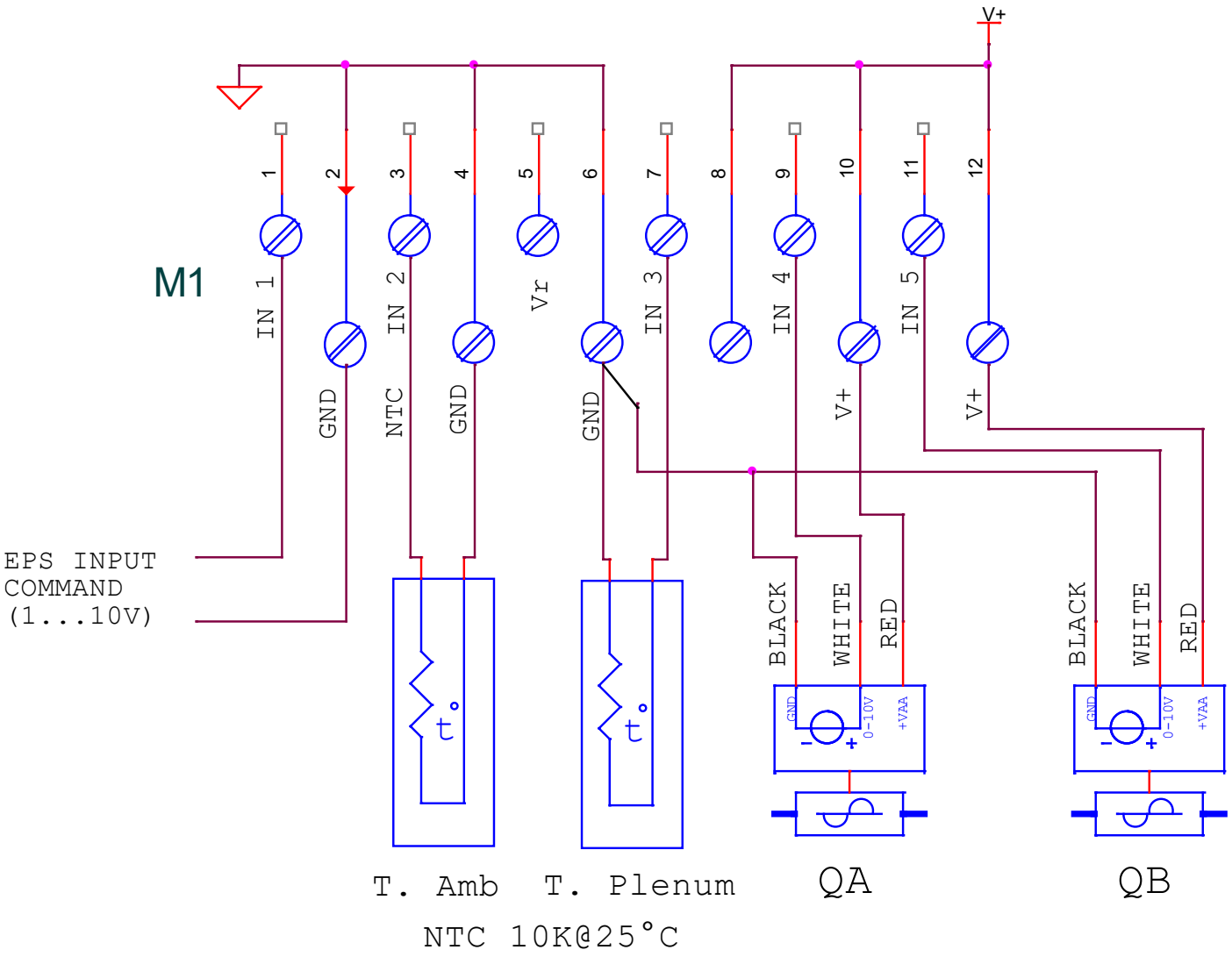

N.B. QA = QB = BELIMO FLOW SENSOR **22PF-1UX**

3.3.1.2. Connection with RGM or ECP: 1-10 Vdc analog signal command

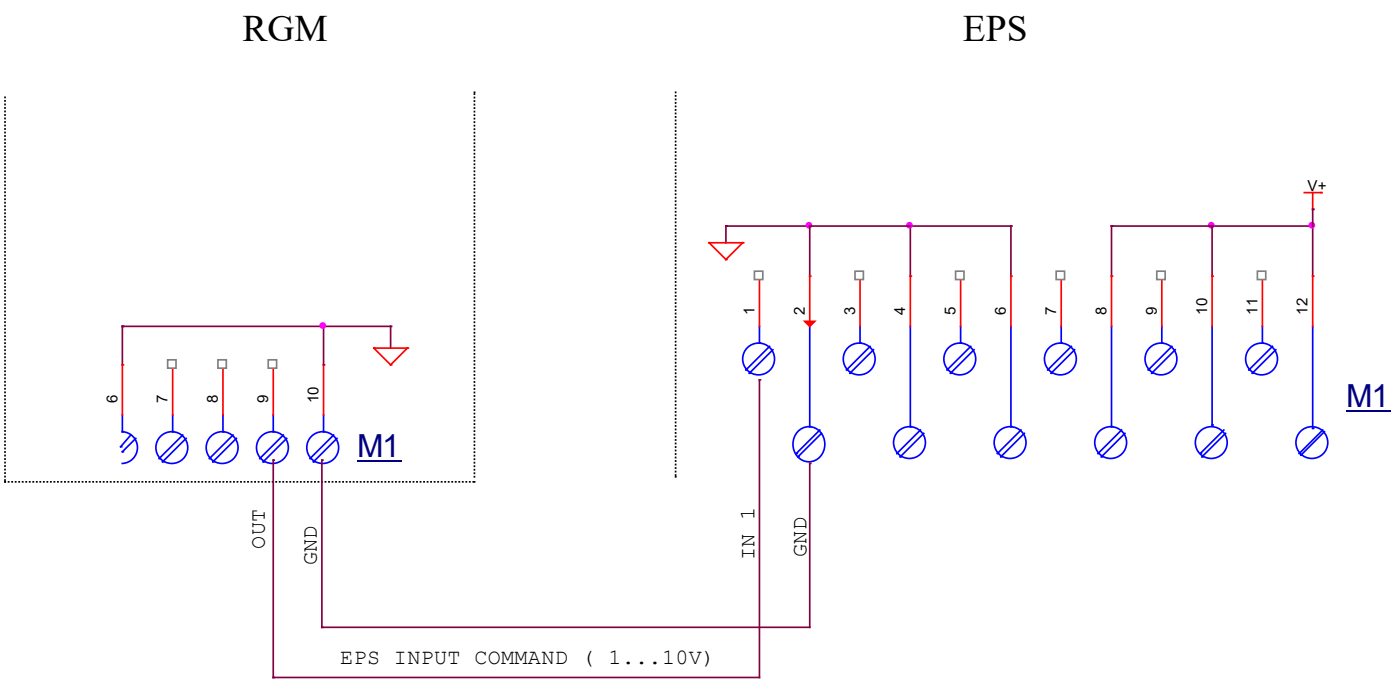

3.3.1.3. Connection with ECM or DSV: 1-10 Vdc analog signal command

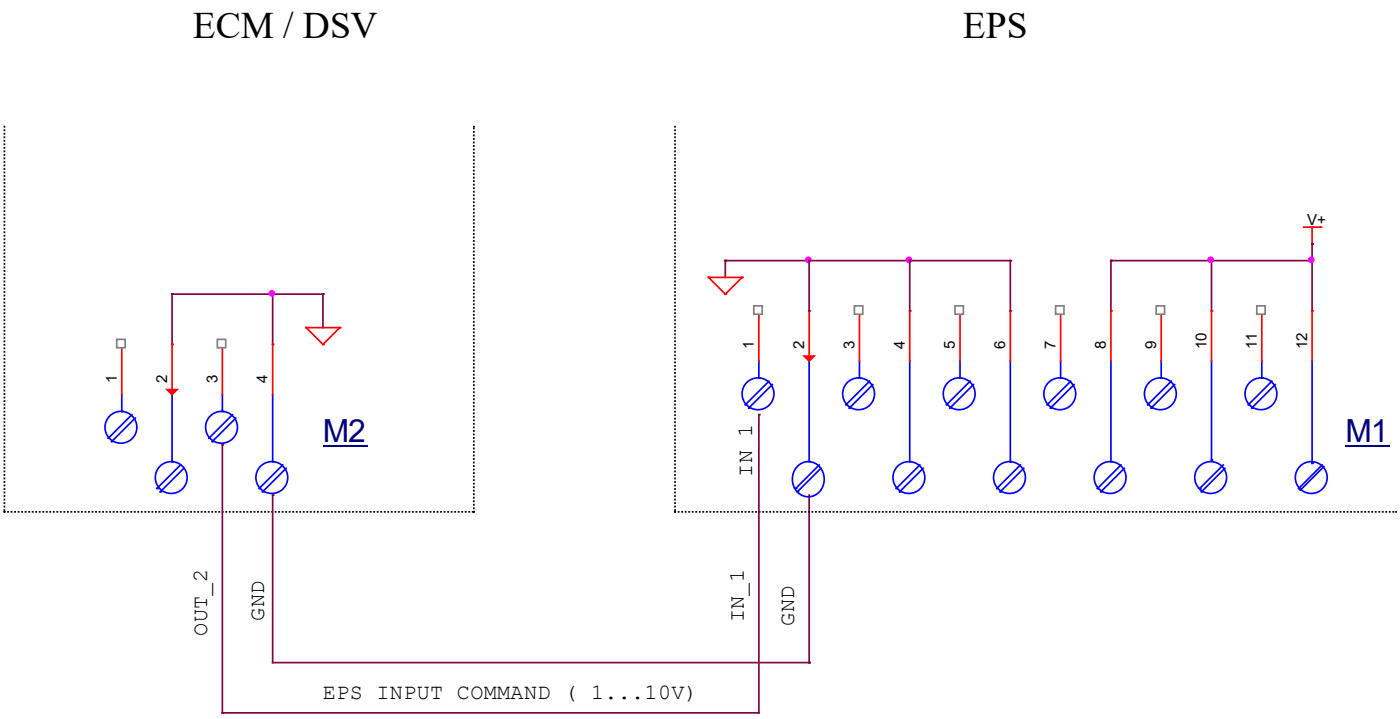

3.3.2. M2 terminal board: ON / OFF logic inputs

Connect only power-free contacts.
Under no circumstances apply a voltage to these inputs

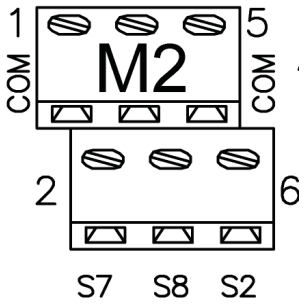

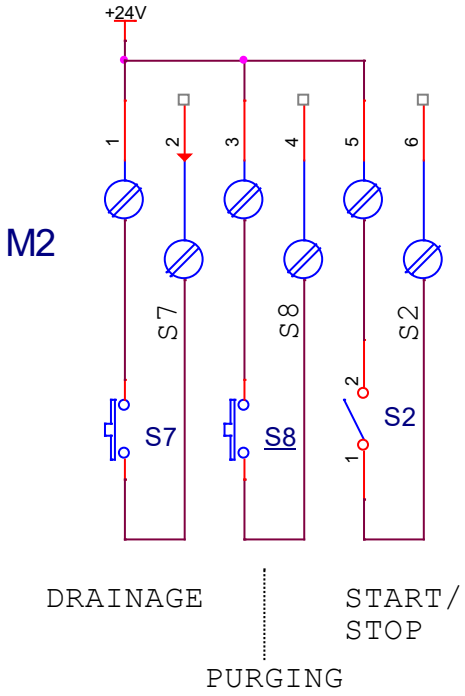

Mors M2		Description
1	**COM**	Common + 24 Vdc
2	**S7**	Drain command input, on closed
3	**COM**	Common + 24 Vdc
4	**S8**	Purge command input, on closed
5	**COM**	Common + 24 Vdc
6	**S2**	Start / Stop input, Closed, see para. 4.4

3.3.3. M3 terminal board: modulating motorized valve control outputs

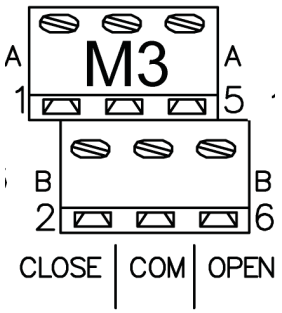

Terminal board M1		Description
1	**Close A**	CLOSE command output for motorized valve "A"
2	**Close B**	CLOSE command output for motorized valve "B"
3	**Common**	Common (0 Vdc)
4	**Common**	Common (0 Vdc)
5	**Open A**	OPEN command output for motorized valve "A"
6	**Open B**	OPEN command output for motorized valve "B"

The **M3** terminal board is intended for the connection of two “Open / Stop / Close” type modulating valves.
The command for each output is ON / OFF type, the outputs are static type protected against short circuit.

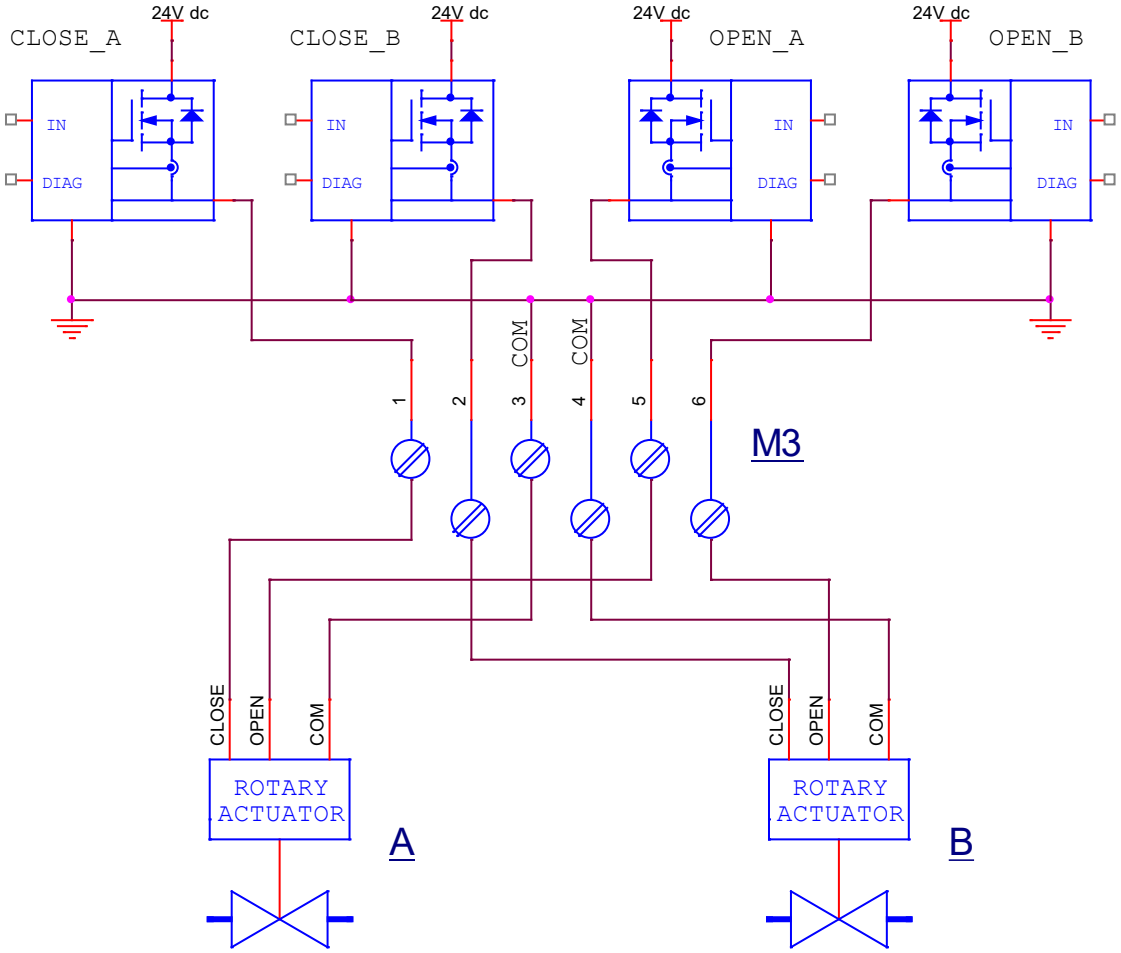

NOTE: A = B = BELIMO MODULATING ROTARY ACTUATOR LR24A-SR + BALL VALVE

3.3.4. M4 terminal board: Open / Closed solenoid valve control outputs

The **M4** terminal board is designed for connection to 3 (three) Open / Closed type solenoid valves, for system power, for draining and for controlling the pump and/or system power supply solenoid valve; use 4 (four) 16 A 250 Vac relays

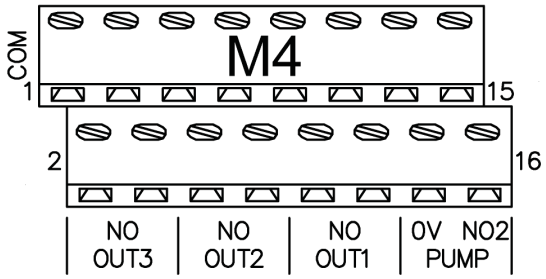

Terminal board M1			Description
1	**-**	**0 Vac**	Common 0 Vac
2	**RL3**	**Out3 NO**	NO contact NC supply solenoid valve control
3	**-**	**0 Vac**	
4	**RL3**	**Out3 NO**	
5	**-**	**0 Vac**	Common 0 Vac
6	**RL4**	**Out2 NO**	NO contact NC drain solenoid valve command
7	**-**	**0 Vac**	
8	**RL4**	**Out2 NO**	
9	**-**	**0 Vac**	Common 0 Vac
10	**RL5**	**Out1 NO**	NO contact NC system pipe drain solenoid valve control
11	**-**	**0 Vac**	
12	**RL5**	**Out1 NO**	
13	**-**	**24 Vac**	AC supply voltage output: 24 Vac
14	**-**	**0 Vac**	Common 0 Vac
15	**RL6**	**Pump NO1**	NO contact for system pump / solenoid valve supply control
16	**RL6**	**Pump NO2**	NO contact for system pump / solenoid valve supply control

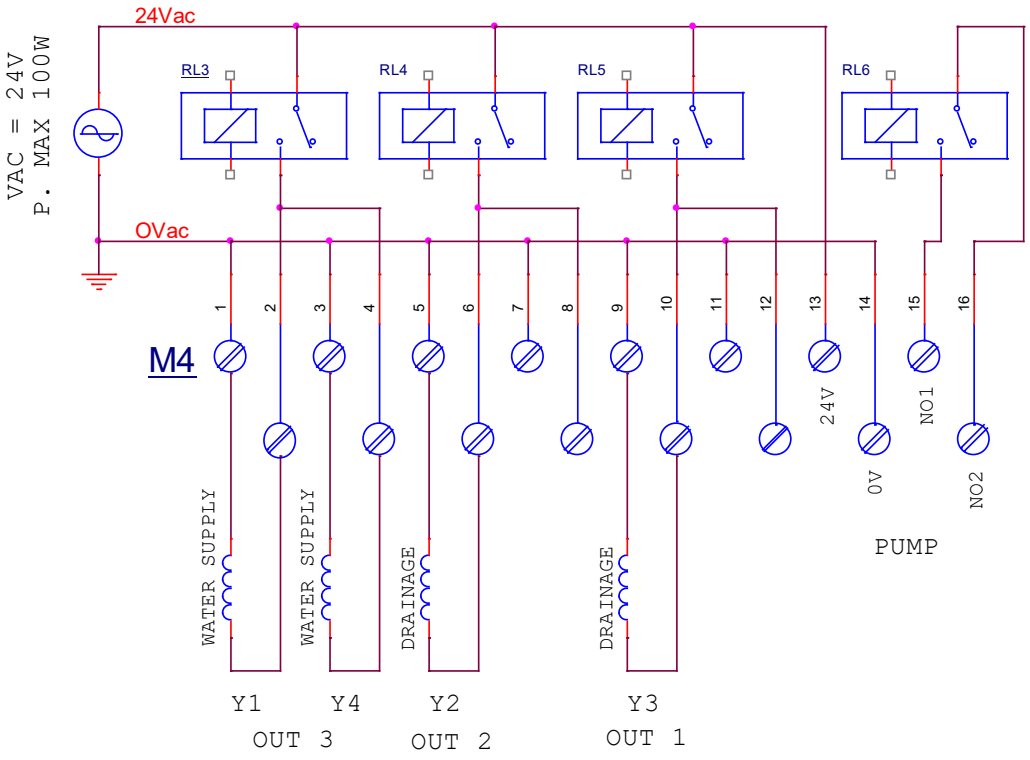

3.3.5. M5 TERMINAL BOARD: RL1 and RL2 service relays

- **RL1**: energized in the absence of device alarms in regular operation
- **RL2**: energized when the pump is running and one or more ramp power valves open, it is de-energized in "Total drain" or "Auto drain" mode

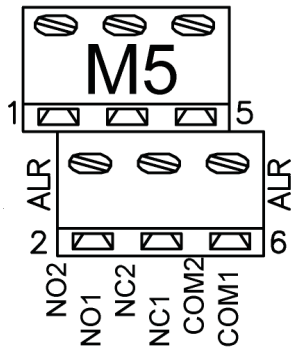

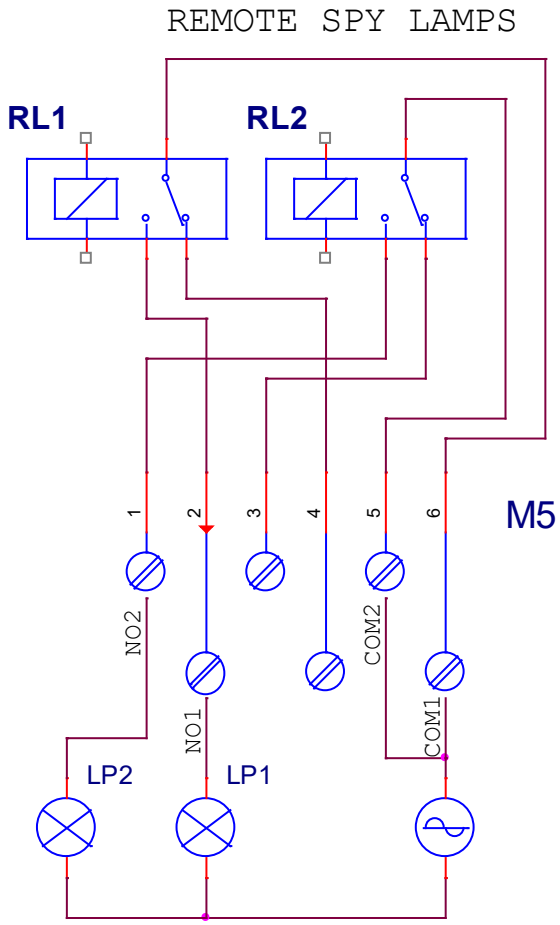

M5 terminal board		
No.	**Abbreviation**	**Description**
1	**NO2**	RL2 relay NO contact
2	**NO1**	RL1 relay NO contact
3	**NC2**	RL2 relay NC contact
4	**NC1**	RL1 relay NC contact
5	**COM2**	Common RL2 relay
6	**COM1**	Common RL1 relay

LP1 Lamp on with EPS powered and without alarms

LP2 Lamp on with water supply consent

3.3.6. PB1073C Module: for RS-485 Isolated Serial Line (ModBus)

The RS-485 MODBUS serial link (RTU) is present on the EPS controller board.
The two **M1** and **M2** terminal boards on the board (plug **PB1073C**), are used for the electrical connections of the RS-485 serial line, managed with the "Modbus RTU in SLAVE mode" protocol, for connection to the "**PC Host**".

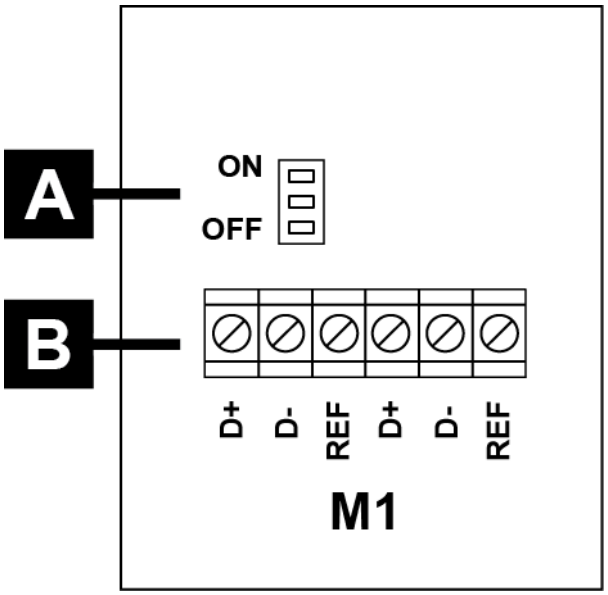

Part	Description
A	Serial Line termination jumper • **ON** (1-2): 120 Ω line termination on • **OFF** (2-3): 120 Ω line termination off
B	Modbus connections (*) • **D+**: RS485 straight (non-inverting) • **D-**: RS485 negative (inverting) • **REF**: isolated transceiver reference grounding

N.B. The **A** jumper must be set to **ON** at the end of the serial line connection

To connect the **RS-485** serial line, use an external cable specific for these applications such as an **ITC BELDEN 15S7D Serial Cable for LAN networks**. The cable length can be up to **1,000 m**

Specifications	Value
Conductor 1	CuSn 7x0.25 mm
Conductor 1 (resistance)	50 Ω/km
Conductor 2	CuSn 7x0.25 mm
Conductor 2 (resistance)	50 Ω/km
Insulation	PEE 2.35 mm
Color code	White/Orange Blue
Plate 1	AL/pet 100%
Sheath 1	CuSn 65%
Internal sheath	Oil-resistant gray flame-retardant PVC
Internal sheath (diameter)	7.6 ± 0.1 mm
External sheath	Black UV ray resistant PE
External sheath (diameter)	9.0 ± 0.1 mm
Characteristic impedance	125 ± 15 Ω
Mutual or coaxial cable capacitance	MUTUAL 36 pF/m
Propagation speed	78%
Shielding efficiency (100–900 MHz)	>85 dB
Drain wire	CuSn 7x0.20 mm

3.3.6.1. RS-485 Serial connection diagram

Connect the cable (braided and shielded + continuity conductor) of the data line (the Modbus network) to the terminals, as shown in the following diagram:

On the last interface, at the end of the line, turn the termination on (J1 = ON)

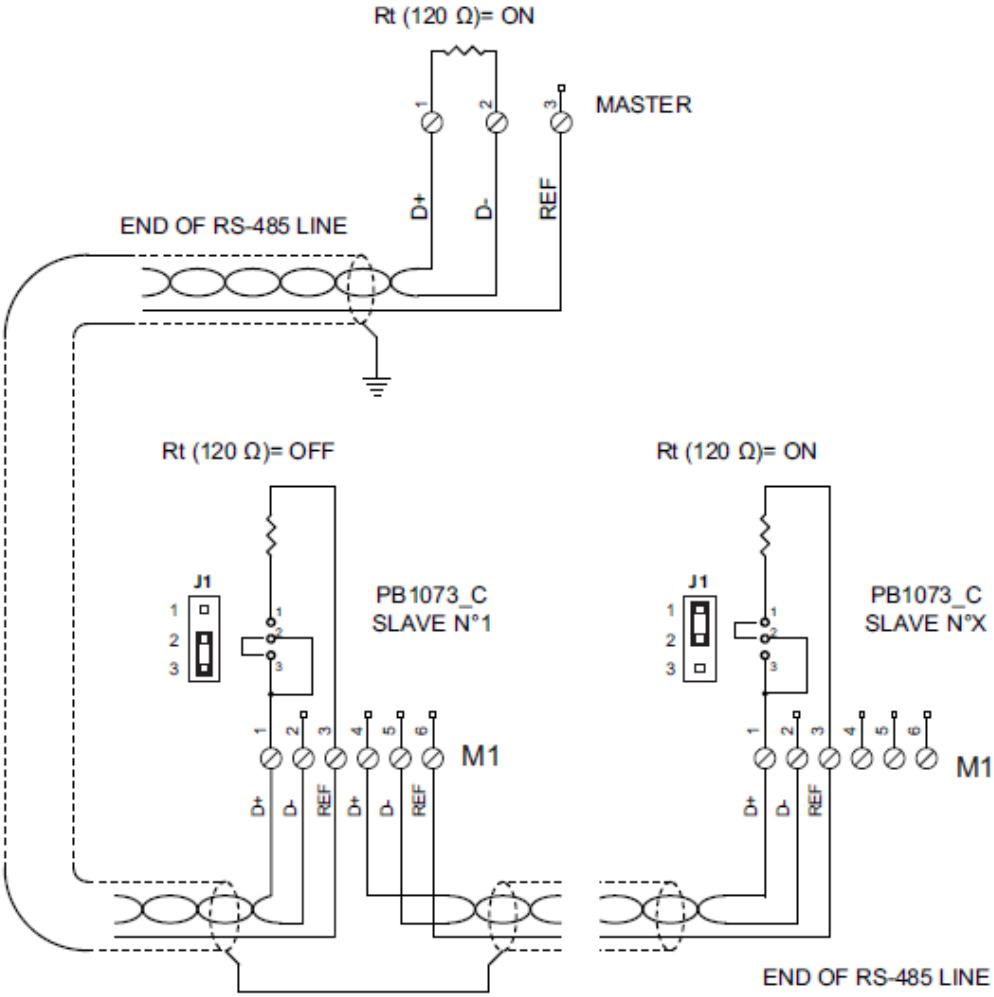

N.B.: It is absolutely essential to check the correct connection of the RS485 line;
All "**D+**", "**D-**" and "**REF**" terminals must be connected with the same cable.
The cable shield is to be grounded and connected to REF, only from the "**PC < - > RS485"** side.

- The data line cable (the Modbus network) must be connected from one controller to the next, starting from the Master unit to finish at the last device served; NO other wiring method is allowed.
- The connections must be made using cables suitable for outdoor environments, and must not exceed the maximum length of **1,000 m**.
- Make sure that you do not mix the Modbus network cable with the other system cables, especially those at the mains voltage.
- The ends of the line (Master and last device served) must be terminated with a **120 ohm** resistance.
  Activate the **120 ohm** termination on the **RS-485 < > PC Host** adapter; on the last line device, turn **J1 ON (2-1)**; on all the intermediate units, leave **J1 OFF (2-3)**.
- Ground the cable that connects all "**REF**" terminals only near the Master station so that all stations are at the same power, which is that of the **PC Host**.
- Ground the cable shield coming from the **RS-485 <> PC Host** adapter, only near the adapter itself; the shield must be connected only on the PC Host side, as shown in the diagram.
- The cable will be divided into segments, one for each section; connect the shield of the first section only from the **RS-485<>PC Host** adapter, and connect the shield of the second section only from the No.1 slave side, and so on.