1. Presentation

The EPS controller is a digital microprocessor unit designed to measure the amount of water supplied to the adiabatic panels (A.P.) used with the ventilated heat exchangers. It is controlled by the analog 1-10 Vdc signal proportional to the fan speed, generated by the ECP, ECM, RGM and DSV controllers.
The EPS controller is optimized for use with the BELIMO LR24A-SR modulating rotary actuator and the corresponding ball valve, as well as the BELIMO FLOW SENSOR 22PF-UX flow meters
The water flow rate is regulated by two modulating valves A and B, one on each side of the exchanger, depending on the fan speed; one or two constant flow values are supplied, which can be modified by the operator.
Some relay ON/OFF outputs allow you to control solenoid valves and pump for supply and drain.

1.1. General description

The EPS controller simultaneously controls two modulating valves (named A and B), three open/closed solenoid valves and the contactor for the electric pump, using the signals coming from three analog voltage inputs (Vdc) and two NTC inputs designed to read the signals produced by control regulators, flow transducers (l/m) or temperature (°C/°F).

The EPS is equipped with an input for an NTC temperature probe to determine if the external temperature allows the use of A.P.s. (WET) or not (DRY) A.P.s. The same probe can trigger an alarm if the external temperature is close to the ice formation temperature.
Two operating modes are possible in WET mode:

1. **Energy Saving**: when the fan speed exceeds the maximum value set for each of the two A.P. rows, the same well-defined water flow is delivered; if the fan speed subsequently falls below a set minimum value, the delivery is cut-off. The minimum and maximum fan speed levels and the water flow can be changed by the operator;

2. **Energy & Water Saving:** the cycle is similar to the one described above with the addition of an intermediate fan speed value and relative water flow rate. When it is on, it involves a reduced water supply, so that both electricity and water are saved simultaneously.

N.B. The fan speed is in no way constrained by the operation of the EPS and is always free to change in order to adapt to the operating conditions and minimize fan energy consumption.

There are relay ON/OFF outputs to enable the system power supply, for example through a pump, and the total water drain at the end of the working cycle. For more details see Chapter 5.

Simultaneously with the enabling of the power supply, the dispensing hours counter is activated, which can not be reset, with the possibility of counting up to 99,999.9 hours of operation.

The device has the following analog inputs:
- No. 1 Input for the 1-10 Vdc command signal;
- No. 1 External temperature NTC probe input for anti-ice protection and Dry/Wet switching;
- No. 1 NTC plenum temperature probe input, inside the exchanger downstream of the A.P., read only.
- No. 2 0-10Vdc inputs for flow transducers to read the amount of water supplied to the two A.P. supply ramps

A plug board is available with an **isolated half-duplex RS-485 serial line**, managed with **MODBUS (RTU)** SLAVE mode protocol for connections with the remote supervision system.
The parameter specifications are described in the document "Modbus RTU description for EPS".

Further details on the Modbus protocol specifications are available on the internet at the "modbus.org" website; in particular, the following documents have been used and have full validity:
- **Modbus Over Serial Line, Specification & Implementation Guide V1.0;**
- **Modbus Application Protocol Specification V1.1.**

A specific control and supervision software is available for the "**PC host**" called "Clima-Sinergy" which is able to communicate with one or more EPS slave units.

Unit of measure: from version 2.0 of the EPS firmware, the temperature and pressure values can be viewed with Imperial units of measure (°F e psi). Therefore, where the text indicates the unit of measure available in °C, it is considered to be °F, and where bar is indicated, it is considered to be psi. For the conversion values, use the following formulas:
- Temperature: °F = 32+ (°C x 9/5)
- Pressure: psi = bar x 14.5

The following diagram shows the basic scheme for using the EPS controller.

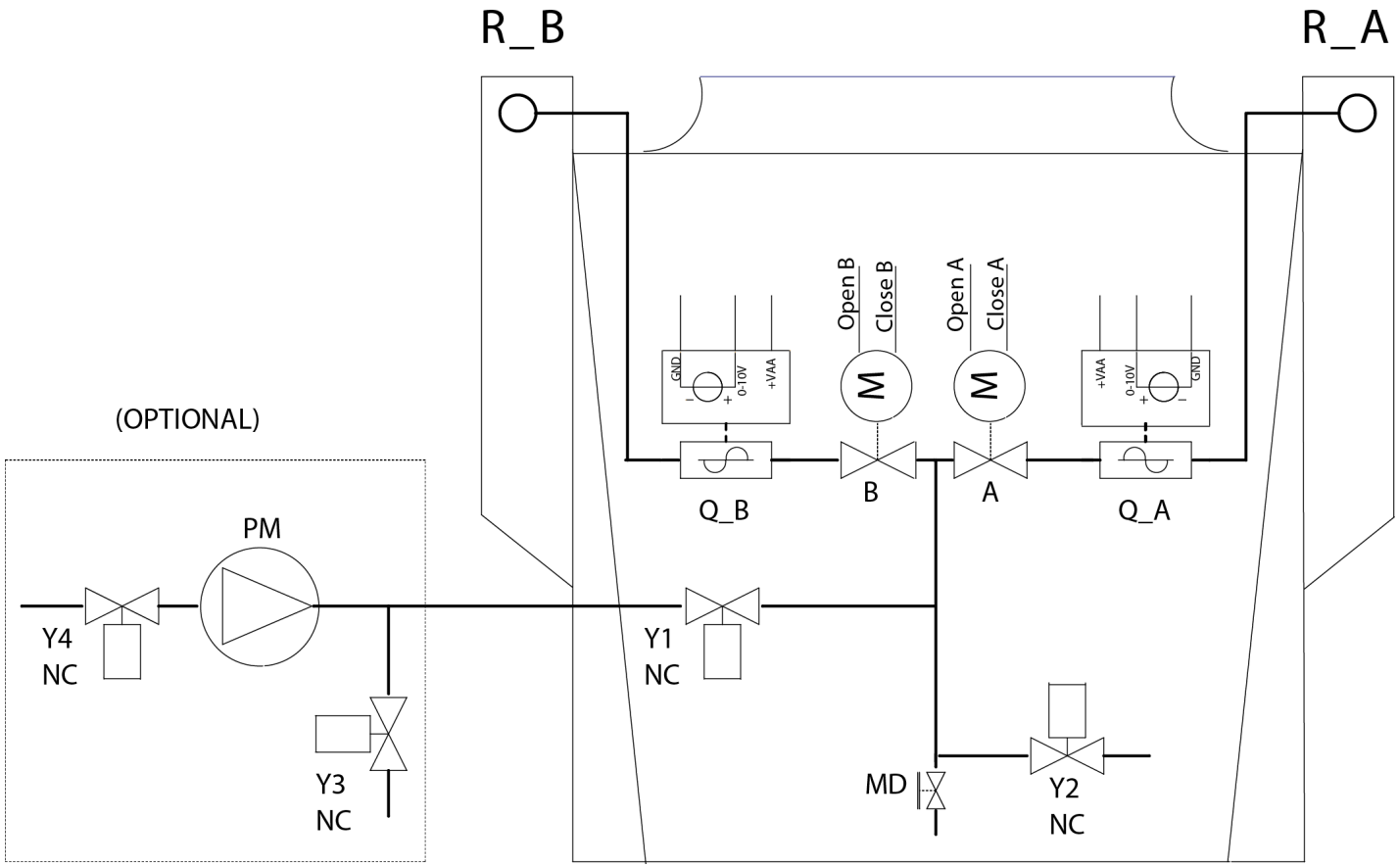

PM	Pump (optional)
Y1	Open/closed solenoid valve, NC, water supply on the machine
Y2	Open/closed solenoid valve, NO, water drain on the machine
Y3	Open/closed solenoid valve, NO, water drain on user side of the system (optional)
Y4	Open/closed solenoid valve, NC water supply on system user side (optional)
MD	Full drain tap, manually operated by the operator
A	Two-way modulating valve for R_A ramp flow regulation R_A 22PF-1UC (DN15)
B	Two-way modulating valve for R_B ramp flow regulation R_B 22PF-1UC (DN15)
Q_A	Transducer for R_A ramp water flow measurement R_A LR24A-SR
Q_B	Transducer for R_B ramp water flow measurement R_A LR24A-SR

1.2. Technical specifications

Power supply	Voltage	Single phase 24 Vac +/-10% (50/60 Hz)
Power	Maximum absorbed	Total 12 W without external solenoid valve control supply
Main functions	**Adiabatic panel supply regulation**	It receives the 1-10 Vdc voltage command from an RGM, ECM, ECP, DSV controller through the **IN1** input: • In "**Dry**" mode, it completely closes the power supply to the A.P.s, switches off the pump, activates the drain valve(s). • In "**Wet Work**" mode, it turns on the water supply, according to the signal at the IN1 input, it adjusts the water flow rate delivered to the A.P.s with the R_A and R_B ramps, through the A and B valves. The supply can be the following modes: o "**energy saving**" (only one flow value, only one level on the IN1 signal); o "**energy and water saving**" (two flow values, two levels on the IN1 signal). For further details see Chapter 5.
	Water system drain	The system water is drained by opening the **RL3** and **RL6** relays (water supply), closing **RL4** and **RL5** relays (drain solenoid valve activation) and forcing open the "**A**" and "**B**" modulating valves. The operation duration is set by parameter **T Drain** (see chapter 6). The device is set for the following drain start modes, the different options can be used according to plumbing settings: • **Total system drain:** can be manually activated by the operator with one of the methods described in **paragraph 5.5.** **Note** The drain does not start if water is being supplied to the adiabatic panels. • **Auto drain due to system inactivity:** if the fan speed drops below **VQdrain** and remains there for at least **DDelay** time. • **Cyclic auto drain:** it is started with the cyclical rate established by the **Drain Wait** parameter, from once a day to once every N days, at the time set by the **Drain Start** parameter.
	Clean up adiabatic panels	This occurs when the adiabatic panels are supplied with the "**QPurge"** quantity of water for a **"TPurge"** period of time. Can only be started by the ON / OFF S8 input**.** It can always be started and does not depend on the status of the EPS, except for the presence of alarms.
	Surveillance input command	Checks that the voltage at the control input **IN1** is always between 1 Vdc and 11 Vdc, checking the connection to the control unit. If it is < 1 Vdc or > 11 Vdc, it sends an alarm signal (see Chapter 5 and Chapter 8).
	Monitoring external temperature thresholds	It reads the external temperature via the **IN2** input connected to an NTC 10 kohm @ 25 °C/77 °F probe. Two adjustable temperature thresholds are available • **Antifreeze temperature** adjustable from **2 to 12 °C**/35.6 to 53.6 °F (Default 8 °C, hysteresis 2 °C). If the temperature is lower than the set value, it sends an alarm signal. • **Dry/Wet Temperature:** adjustable from **4 to 40 °C**/39.2 to 104 °F (default 27 °C, hysteresis 1 or 3 °C) DRY operation design temperature. If the temperature is under the set value, it enables**"Dry"** operations, if higher, **"Wet"** operations.
	Temperature plenum	It reads the air temperature in the area downstream of the adiabatic panels before the fans (called "plenum") through **IN3** input connected to an NTC 10 kohm @ 25 °C/77 °F probe.
	Hour meter	From **0 to 99,999.9 h** cannot be reset, to count total water supply time by EPS. The count is updated every minute, saving every 15 minutes.

<table>
<tr><td rowspan="8">Input signals</td><td>Analog signal inputs</td><td colspan="4">The device is set to work with the following input signals:

<table>
<tr><th></th><th>Input signal</th><th>Ri: Input resistance</th><th></th><th>Alarm thresholds</th></tr>
<tr><td>IN 1</td><td>1 – 10 Vdc</td><td>18 kohm</td><td>Command input</td><td>0.7V < IN1 < 11V</td></tr>
<tr><td>IN 2</td><td>NTC</td><td>-</td><td>Ambient temperature</td><td>-4°C < IN2 < +68°C</td></tr>
<tr><td></td><td></td><td></td><td></td><td>24.8 °F< IN2 < +154 °F</td></tr>
<tr><td>IN 3</td><td>NTC</td><td>-</td><td>Temperature plenum</td><td>No alarm</td></tr>
<tr><td>IN 4</td><td>0 – 10 Vdc</td><td>18 kohm</td><td>Ramp A water flow rate</td><td>0.2V < IN1 < 11V</td></tr>
<tr><td>IN 5</td><td>0 – 10 Vdc</td><td>18 kohm</td><td>Ramp B water flow rate</td><td>0.2V < IN1 < 11V</td></tr>
</table></td></tr>
<tr><td rowspan="3">Inputs for ON / OFF contacts (logic)</td><td>S7</td><td colspan="3">Manual drain command input (manual drainage)</td></tr>
<tr><td>S8</td><td colspan="3">Manual drain A.P. purge command input (purging)</td></tr>
<tr><td>S2</td><td colspan="3">Start / Stop command input (Closed = Stop)</td></tr>
<tr><td>Serial Line</td><td>RS485 Serial Line</td><td colspan="4">Isolated RS485 serial line: dedicated to “PC Host” connection, controlled with ModBus RTU protocol in “SLAVE” mode, further details in paragraph 3.3.6.</td></tr>
<tr><td>Manual commands</td><td>Manual drain command</td><td colspan="4">SB2: internal button, replicated in the terminal board, allows the system to be drained at the end of the season.</td></tr>
<tr><td rowspan="3">Signal outputs</td><td>Transducer power supply</td><td colspan="4">2 (two) +22 Vdc ±10%, 40 mA non stabilized outputs, protected against short-circuit.</td></tr>
<tr><td>Potentiometer sensor supply</td><td colspan="4">1 (one) +10 Vdc stabilized output with protection, for potentiometer supply, remote manual control.</td></tr>
<tr><td>RL1 relay</td><td colspan="4">NO 5 A 250 Vac, 30 Vdc / NC 3 A 250 Vac, 30 Vdc contact, closed with device running without alarms.</td></tr>
<tr><td>RL2 relay</td><td colspan="4">NO 5 A 250 Vac, 30 Vdc contact, closed with water supply consent.</td></tr>
<tr><td rowspan="5">Power outputs</td><td>RL6: pump control</td><td colspan="4">No. 1 NO 16 A 250 Vac relay, power-free contact (with the possibility of using the local power supply of the 24 Vac solenoid valves).</td></tr>
<tr><td rowspan="3">RL3, RL4, RL6 Solenoid valve control ON/OFF</td><td colspan="4">No. 3 NO 16 A 250 Vac relays supplied as follows</td></tr>
<tr><td>Voltage</td><td colspan="3">24 Vac</td></tr>
<tr><td>Maximum absorbed</td><td colspan="3">100 V A (max)</td></tr>
<tr><td rowspan="3">Modulating motorized valve control</td><td colspan="4">No. 2 pairs of static outputs protected against short-circuit 24 Vdc / 500 mA max.</td></tr>
<tr><td>Voltage</td><td colspan="3">24 Vdc</td></tr>
<tr><td>Maximum absorbed</td><td colspan="3">12 V A</td></tr>
<tr><td rowspan="2">Display and Keyboard</td><td>Display</td><td colspan="4">Monochromatic LCD display consisting of 4 lines with 20 characters per backlit line.</td></tr>
<tr><td>Dial Pad</td><td colspan="4">Four keys with the following functions: UP (+) | DOWN (-) | ESCAPE | ENTER.</td></tr>
<tr><td rowspan="22">Signal led</td><td>DL1</td><td>Power</td><td>green</td><td>Logic board service power on.</td></tr>
<tr><td>DL2</td><td>CPU Run</td><td>green</td><td>Flashing: logic board microcontroller on.</td></tr>
<tr><td>DL3</td><td>Fail</td><td>red</td><td>One or more alarms triggered (see Chapter 8).</td></tr>
<tr><td>DL4</td><td>S7</td><td>yellow</td><td>Drain manual control input status (manual drainage).</td></tr>
<tr><td>DL5</td><td>S8</td><td>yellow</td><td>Manual purge command input status (manual purging).</td></tr>
<tr><td>DL6</td><td>S2</td><td>yellow</td><td>Start consent, lit = Start.</td></tr>
<tr><td>DL7</td><td>TX0</td><td>yellow</td><td>Serial 0, data in output.</td></tr>
<tr><td>DL8</td><td>TX1</td><td>yellow</td><td>Serial 1, data in output.</td></tr>
<tr><td>DL9</td><td>TX2</td><td>yellow</td><td>Serial 2, data in output.</td></tr>
<tr><td>DL10</td><td>RX0</td><td>yellow</td><td>Serial 0, data in input.</td></tr>
<tr><td>DL11</td><td>RX1</td><td>yellow</td><td>Serial 1, data in input.</td></tr>
<tr><td>DL12</td><td>RX2</td><td>yellow</td><td>Serial 2, data in input.</td></tr>
<tr><td>DL13</td><td>A open</td><td>yellow</td><td>OPEN command for modulating valve "A".</td></tr>
<tr><td>DL14</td><td>B open</td><td>yellow</td><td>OPEN command for modulating valve "B".</td></tr>
<tr><td>DL15</td><td>A close</td><td>yellow</td><td>CLOSE command for modulating valve "A".</td></tr>
<tr><td>DL16</td><td>B close</td><td>yellow</td><td>CLOSE command for modulating valve "B".</td></tr>
<tr><td>DL17</td><td>Out_3</td><td>green</td><td>RL3 relay status (on if RL3 = ON = energized).</td></tr>
<tr><td>DL18</td><td>Out_2</td><td>green</td><td>RL4 relay status (on if RL4 = ON = energized).</td></tr>
<tr><td>DL19</td><td>Out_1</td><td>green</td><td>RL5 relay status (on if RL5 = ON = energized).</td></tr>
<tr><td>DL20</td><td>Pump</td><td>green</td><td>RL6 relay status (on if RL6 = ON = energized).</td></tr>
<tr><td>DL21</td><td>OK (No Alarm)</td><td>green</td><td>RL1 relay status (on if RL1 = ON = energized).</td></tr>
<tr><td>DL22</td><td>Elv On</td><td>green</td><td>RL2 relay status (on if RL2 = ON = energized).</td></tr>
</table>

Case	**Protection rating**	**IP 00**
Working conditions	**Working temperature**	**-20 T 50** (from –20 °C to + 50 °C / from –4 °F to + 122 °F) for temperatures < -10 °C/ 14 °F use **S2** (stand-by regulation).
	Storage temperature	**-30 T 85** (from –30 °C to + 85 °C / from –22 °F to + 185 °F).
	Vibrations	Under 1 G (9.8 m/s^2).
Assembly	**Mounting**	Vertical wall-mount only with No. 4 holes Ø5 mm
Electrical connections	**Signal**	Terminals for flexible cable section from **0.14 to 1.5 mm² / 26-16 AWG C**.
	Power supply	Terminals for flexible cable section from **0.5 to 10 mmq / 20-6 AWG C**.
	Directive 2004/108/EC	**CEI EN 61800-3**: Variable speed electric drives. Part 3: electromagnetic compatibility requirements and specific test methods

1.3.Mechanical dimensions

IP00 panel indoor version

MODEL	A	B	C	D	E	F	∅ Mounting Holes
EPS IP00	194	168	136.5	221	198	165	5.0

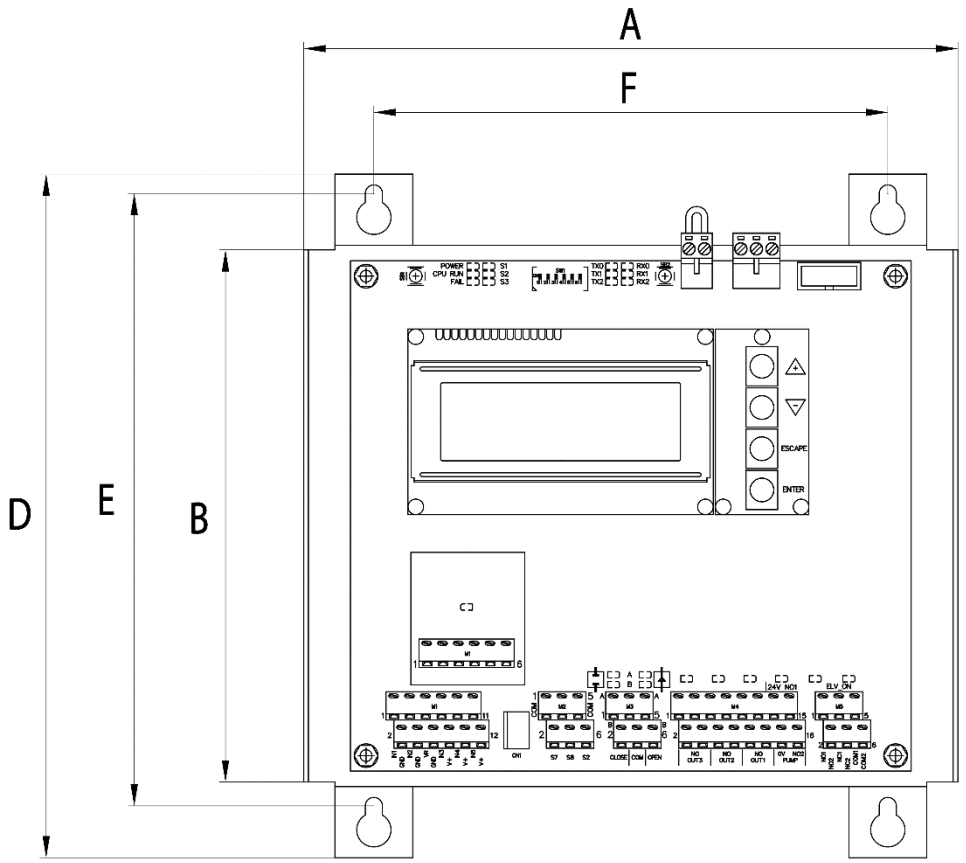

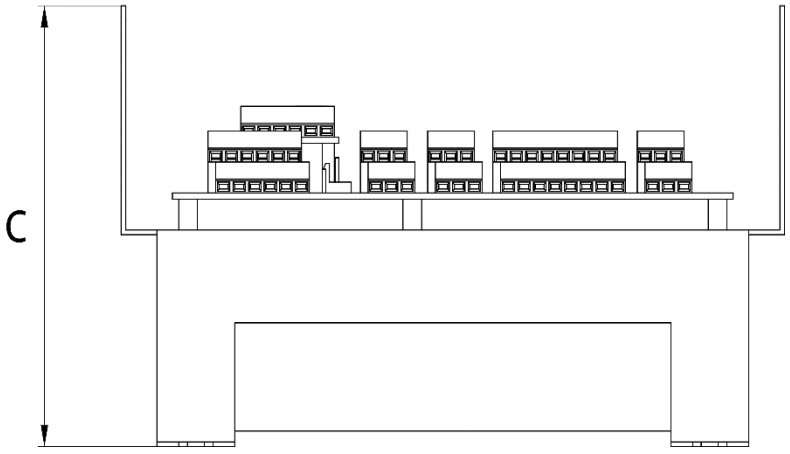

1.4.Connection, display and control device layout

IP00 panel indoor open execution 24 Vac power supply

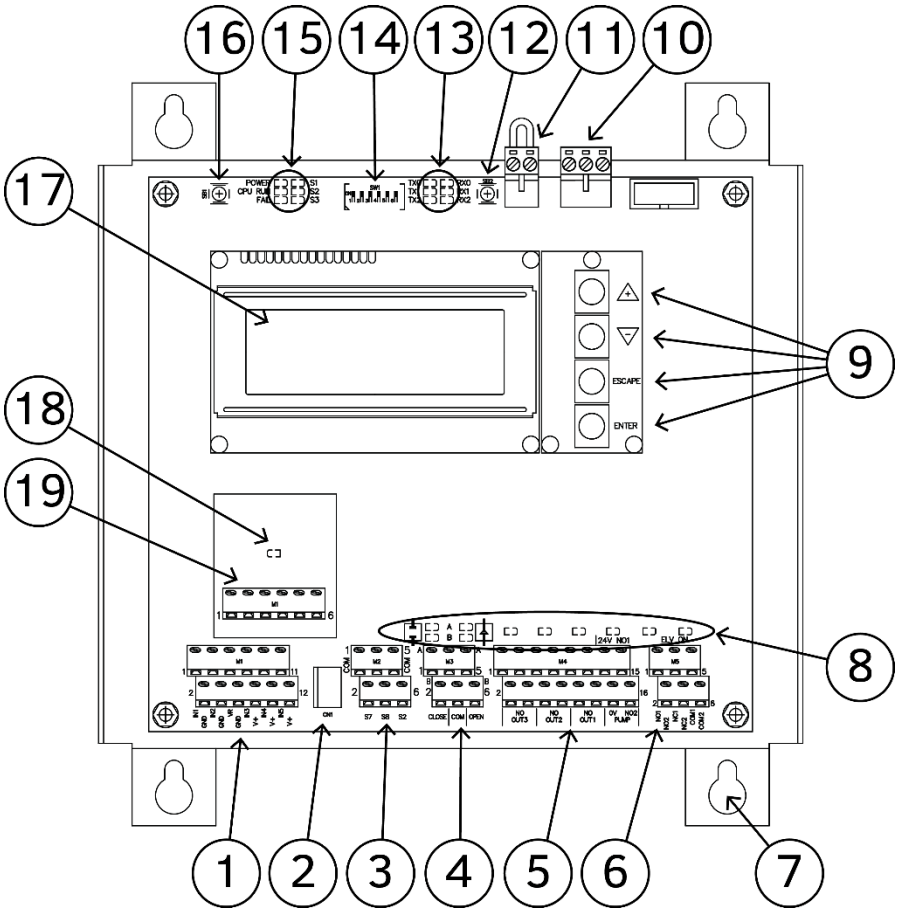

Key

1	**M1** terminal board for analog input signal connections
2	**CN1** connector for remote manual drain command key connection
3	**M2** terminal board for ON / OFF input connections (auxiliary contacts)
4	**M3** terminal board for modulating valve command connections
5	**M4** terminal board for Open/Closed solenoid valve and Pump command connections
6	**M5** terminal board for **RL1** and **RL2** relay connections
7	Support brackets for panel back wall mount
8	Modulating valve and service relay control output status signal LEDs
9	**UP (+) | DOWN (-) | ESCAPE | ENTER** keys (plug **PB1071A**)
10	**M7** terminal board for 24Vac power supply and grounding connections
11	**M6** terminal board for power switch connection
12	**SB2**: Manual internal DRAIN command key
13	Activity monitoring LEDs (RX / TX) on serial lines 0, 1, 2
14	Dip switches settings
15	Status, alarm and auxiliary input monitoring LEDs
16	**SB1**: Manual RESET button
17	Backlit LCD display, 4 alphanumeric 20-character rows
18	RS485 PB1073C serial interface board
19	RS485 PB1073C serial interface terminal board