6. Connections

6.1 Power supply wiring

6.1.1 Power supply wiring ECP 230–460 V IP55 Fuse 2A

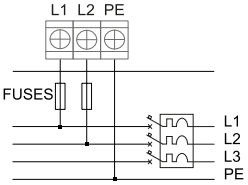

6.1.2 Power supply wiring ECP 230–460 V IP00 Fuse 2A

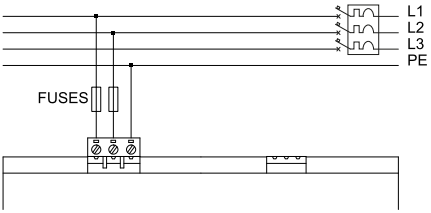

6.1.3 Power supply wiring ECP 20–24 V IP55 Fuse 2A

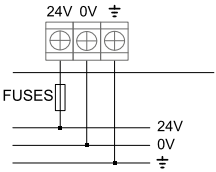

6.1.4 Power supply wiring ECP 20–24 V IP00 Fuse 2A

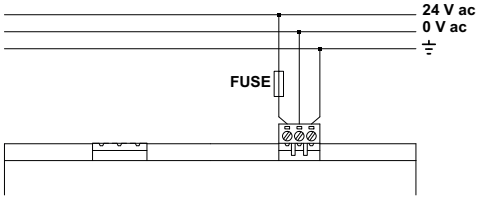

6.2 Connecting analog inputs in Slave mode

6.2.1 Connection for Slave unit with 0-10 V dc input

The connection of a potentiometer for manual control or, alternatively, a remote controller with 0–10 Vdc output is illustrated in the diagram. . If you use a shielded cable, ground the shield directly.

This connection requires the use of the configuration **rS 010**.

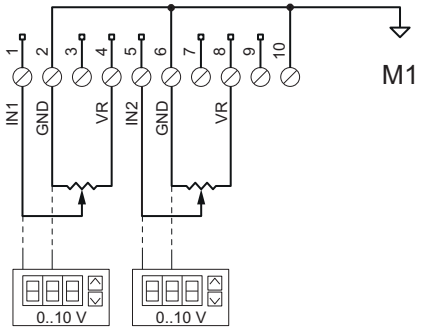

6.2.2 Connection for Slave unit with input 0-20 mA/4-20 mA

The diagram shows the connection to a remote controller with output 0-20 mA/4-20 mA or, as an alternative, to a 0-20 mA/4-20 mA transmitter for manual control. If the device has 0-20 mA output use the **rS 020** configuration, if it has 4-20 mA output use the **rS 420**.

Signal taken from + 24 Vdc

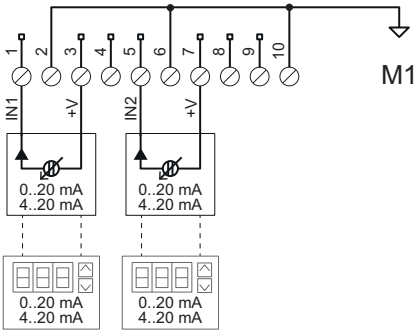

With grounded return signal

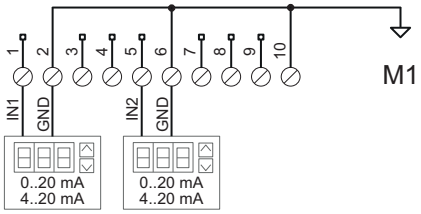

6.3 Analog input connections in Master mode

6.3.1 Connection to two transducers with 4-20 mA output

The diagram shows the connection of two pressure transducers with 4-20 mA output. Transducers can be used to read any magnitude as long as the output is 4-20 mA and the supply +22 V dc + 10-20%. The display shows mA or bar according to the default configuration.

This connection requires the use of **rPr420** (mA measurements), **rPr015**, **rPr025**, **rPr030**, **rPr045** (bar measurements) configurations.

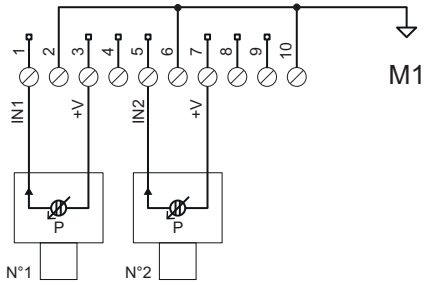

In the default configuration, the setpoint coincides with the maximum fan speed (menu **conF** > **C4** = **hi**). There are two transducers (menu **conF** > **C0** = **r2**), the controller automatically selects the transducer with the higher signal (menu **conF** > **C1** = **hi**). If only one transducer is connected, always use input **IN1** and configuration **G1**/**rP1**.

6.3.2 Transducer connection with output 0-5/0-10 V dc

The diagram below shows the connection of two pressure transducers with output 0–5/0–10 Vdc. Transducers can be used to read any magnitude as long as the output is 0–5/0–10 Vdc and the power supply is 5/10 Vdc. The display shows volt or bar according to the default configuration. The VR communication between +5.0 Vdc and +10.0 Vdc is automatic.

This connection requires the use of **rUu010**, **rUu-05** (Vdc measurements), **rPu030** (bar measurements) configurations.

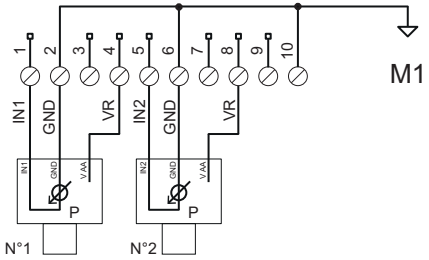

In the default configuration, the setpoint coincides with the maximum fan speed (menu **conF** > **C4** = **hi**), there are two transducers (menu **conF** > **C0** = **r2**), the controller automatically selects the transducer with the higher signal (menu **conF** > **C1** = **hi**).

6.3.3 Connection to NTC probe with 10 kΩ @ 25 °C ohm value

The connection of two NTC 10K @ 25 °C probes is illustrated in the diagram. Only this type of NTC probe can be used. The display is in °C.

This connection requires the use of **rtE-01** and **rtE-02** (measurements in °C) configurations.

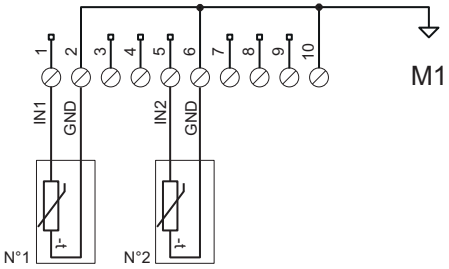

In the default configuration, the setpoint coincides with the maximum fan speed (menu **conF** > **C4** = **hi**), there are two probes (menu **conF** > **C0** = **r2**), the controller automatically selects the probe with the higher signal (menu **conF** > **C1** = **hi**). If only one sensor is connected, the system automatically selects the one present.

6.4 On/Off inputs connection

6.4.1 Diagram

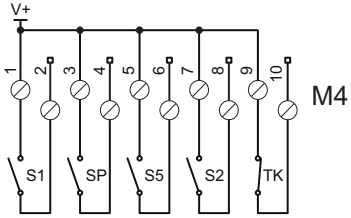

6.5 OUT analog output connections

6.5.1 Slave unit connection

This connection is indicated for EC motors. By default, the output varies from 0–10 V to be directly proportionate to the **Co** parameters. With parameter **C7**=1, voltage varies from 0.75–10 V. A cable detachment or controller fault can thus be intercepted.

By default, the output varies from 0/1–10 V to be directly proportionate to the **Co** parameter.

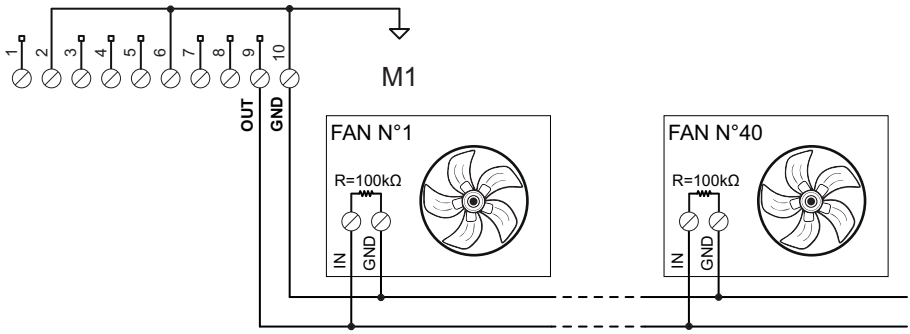

6.6 Relay output connection

6.6.1 Connection to external systems for communicating alarms, faults or operating states.

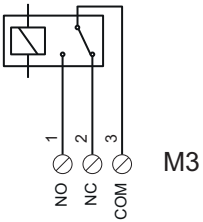

6.7 RS485 Modbus RTU network connection (optional)

6.7.1 Correct connection steps

***NOTICE**: follow the indicated steps for correct Modbus connection operations.*

1. Use an outdoor cable specific for outdoor applications with **length under 1000 meters**, for example, a serial cable for LAN ITC BELDEN 15S7D networks (see specifications "BELDEN cable specifications for RS485 connection" on page 59).
2. Make sure the RS-485 line is correctly connected: all network **D0+** terminals must **all be connected to the same conductor**, the same for **D0-** and **REF0** terminals.
3. Lay the data line cable (Modbus network) **from an ECP device to the next**, starting from the Master unit and ending with the last serviced device. Other wiring methods are not permitted.
4. Ensure **sufficient distance between the Modbus network cable and other system cables**, especially from mains cables.
5. **Terminate line ends** (the Master and last serviced device) **with a 120 Ω resistance** (**Rt**). Enable the 120 Ω termination on the RS-485/PC-Host adapter.

6. **On the last line device** turn the **J1** jumper to 2-1 (ON). **On all other devices** turn the **J1** jumper to 2-3 (OFF).
7. Ground the cable shield starting from the RS-485/PC-Host insulated adapter **only near the adapter**: the cable will be divided into sections, one for each segment. **Do not connect the REF0 shield** at any point.
8. **Connect the first segment shield to the second shield** and so on. The last segment on the last device side shield remains free.

6.7.2 RS485 Modbus RTU network wiring diagram

***NOTICE**: the network cable must be connected as indicated in the diagram. Other wiring methods are NOT permitted.*

