6. Connections

6.1 Power supply wiring

6.1.1 Power supply wiring ECM 230–460 V IP55 Fuse 2A

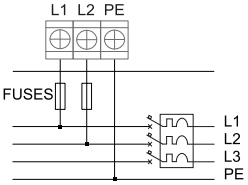

6.1.2 Power supply wiring ECM 230–460 V IP00 Fuse 2A

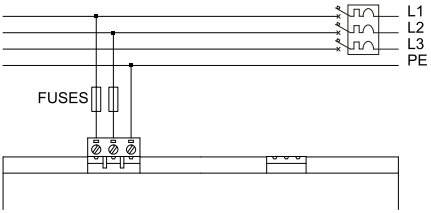

6.1.3 Power supply wiring ECM 20–24 V IP00 Fuse 2A

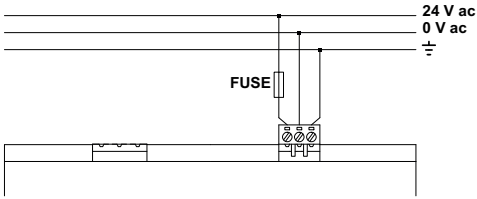

6.2 Analog input connections IN and IN2 in Slave mode

6.2.1 Connection for Slave unit with 0-10 V dc input

The connection of a potentiometer for manual control or, alternatively, a remote controller with 0–10 Vdc output is illustrated in the diagram. If you use a shielded cable, ground the shield directly.

This connection requires the use of the configuration **rS 010**.

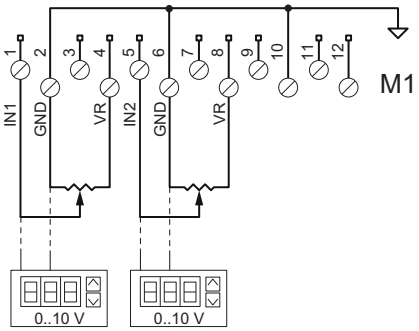

6.2.2 Connection for Slave unit with input 0-20 mA/4-20 mA

The diagram shows the connection to a remote controller with output 0-20 mA/4-20 mA or, as an alternative, to a 0-20 mA/4-20 mA transmitter for manual control. If the device has 0-20 mA output use the **rS 020** configuration, if it has 4-20 mA output use the **rS 420**.

Signal taken from + 24 Vdc

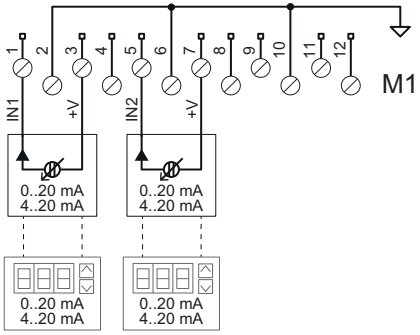

With grounded return signal

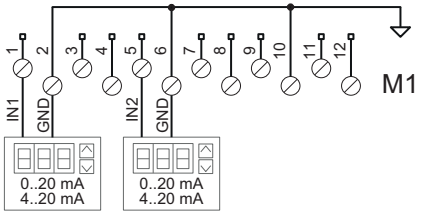

6.3 Analog input connections IN1 and IN2 in Master mode

6.3.1 Connection to two transducers with 4-20 mA output

The diagram shows the connection of two pressure transducers with 4–20 mA output. Transducers can be used to read any magnitude as long as the output is 4-20 mA and the supply +22 V dc + 10-20%. The display shows mA or bar according to the default configuration.

This connection requires the use of **rPr420** (mA measurements), **rPr015**, **rPr025**, **rPr030**, **rPr045** (bar or psi measurements) configurations.

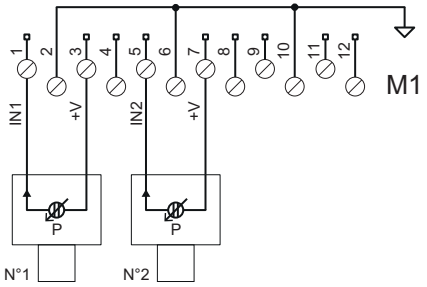

In the default configuration, the setpoint coincides with the maximum fan speed (menu **4: SETUP** > **C4** = **hi**). Two transducers are provided for (menu **4: SETUP** > **C0** = **r2**), the controller automatically selects the transducer with the strongest signal (menu **4: SETUP** > **C1** = **hi**).

6.3.2 Transducer connection with output 0–5/0–10 Vdc

The diagram below shows the connection of two pressure transducers with output 0–5/0–10 Vdc. Transducers can be used to read any magnitude as long as the output is 0–5/0–10 Vdc and the power supply is 5/10 Vdc. The display shows volt or bar according to the default configuration. The VR communication between +5.0 Vdc and +10.0 Vdc is automatic.

This connection requires the use of **rUu010**, **rUu-05** (Vdc measurements), **rPu030** (bar or psi measurements) configurations.

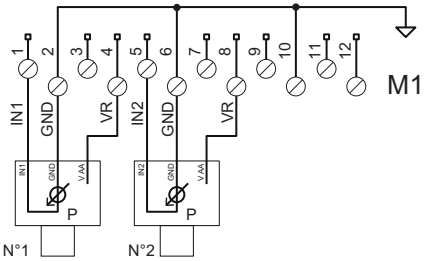

In the default configuration, the setpoint coincides with the maximum fan speed (menu **4: SETUP** > **C4** = **hi**), there are two transducers (menu **4: SETUP** > **C0** = **r2**), the controller automatically selects the transducer with the stronger signal (menu **4: SETUP** > **C1** = **hi**).

6.3.3 Connection to NTC probe with 10 kΩ @ 25 °C/77 °F, B (25/85)= 3435 K ohm value

The connection of two NTC 10 kΩ @ 25 °C/77 °F probes is illustrated in the diagram. Only this type of NTC probe can be used. The display is in °C or °F.

This connection requires the use of **rtE-01** and **rtE-02** (measurements in °C or °F) configurations.

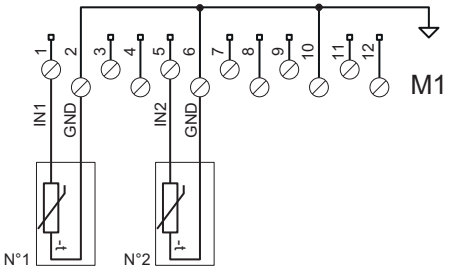

In the default configuration, the setpoint coincides with the maximum fan speed (menu **4: SETUP** > **C4** = **hi**), there are two transducers (menu **4: SETUP** > **C0** = **r2**), the controller automatically selects the transducer with the stronger signal (menu **4: SETUP** > **C1** = **hi**). If only one sensor is connected, the system automatically selects the one present.

6.4 Analog input IN3 wiring

6.4.1 IN3 wiring for read-only input

4–20 mA

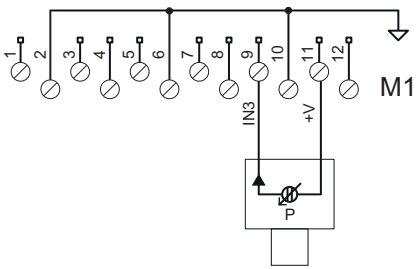

0–5/0–10 Vdc

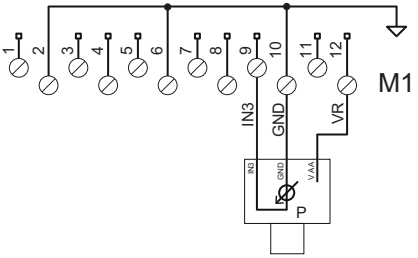

NTC 10 kΩ @ 25 °C/ 77 °F, B (25/85)= 3435 K

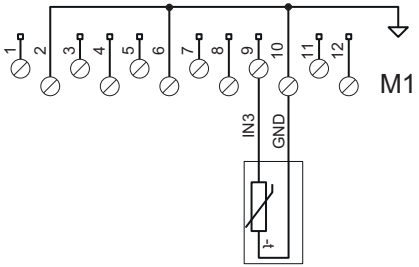

***Note**: the same type of sensor as the ones connected to inputs **IN1** and **IN2** must be connected on input **IN3**. For details on the necessary configurations and display screens, see "Analog input connections IN1 and IN2 in Master mode" on page 29.*

6.4.2 Connection IN3 for switching the setpoint (Bank Switch) or for adjustment of the setpoint (Floating SP) following the external temperature

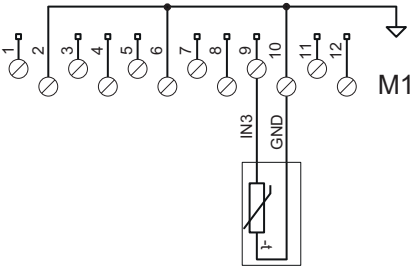

6.4.3 IN3 connection for external setpoint control with 0-10 V signal (SP from IN3)

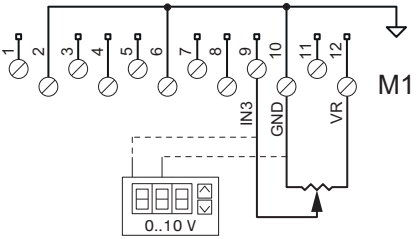

***Note**: in configurations **rUu-05** and **rPu030**, the voltage +10V must be supplied externally.*

6.4.4 Connection IN3 for operation in Slave Safety mode

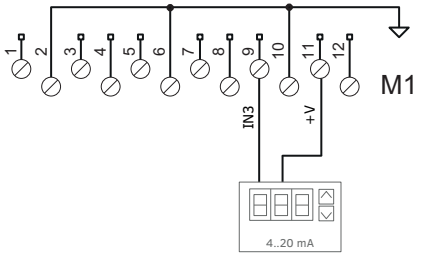

6.5 On/Off inputs connection

6.5.1 Diagram

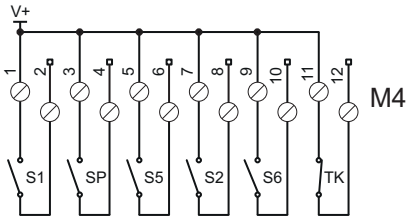

6.6 Analog outputs OUT1 and OUT2

6.6.1 Slave unit connection

This connection is suitable for EC fans. By default, the output varies from 0/1–10 V to be directly proportionate to the **Co** parameter.

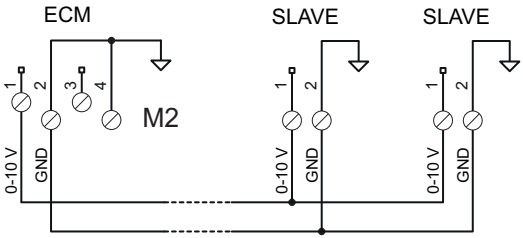

6.6.2 Connection to Water Spray unit

This connection is indicated to coordinate fan system and spray unit operations that increase heat exchanger heat power. You can connect three different Water Spray unit models:

- AFS: for single-spray ramp on/off control
- AWS100: for On/Off control from 1 to 3 spray ramps of 1 or 2 modulating valves.
- WS100-180: for On/Off control from 1 to 4 spray ramps (product replaced by AWS100).

NOTICE*: to avoid unwanted activation, do not connect the spray unit or pay careful attention to the parameter settings when the regulator works in Master PID mode.*

The **C8** = SPRAY 1-10 V parameter (default) enables the **OUT2** analog output to transmit the spray unit control command, making a work area defined by the **USP** setpoint and **UPb** proportional band for external units available. This work area overlaps by integrating with the fan work area.

USP is set by deviation (+/-) from the reference setpoint (**SP1** or **SP2**) for fans.

Connection diagram to AFS units

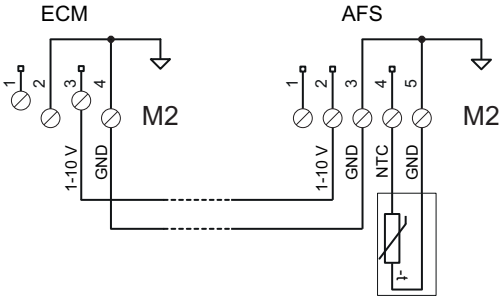

Connection diagram to AWS100 unit

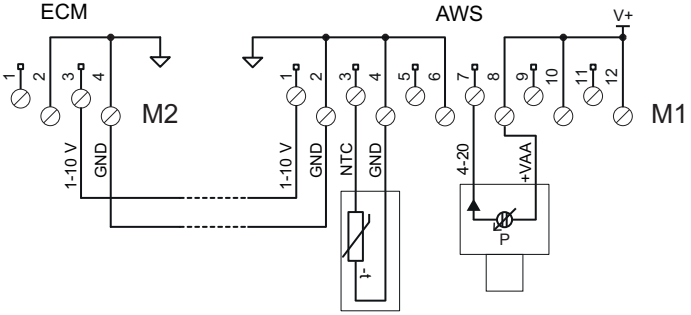

Connection diagram to WS100-180 unit

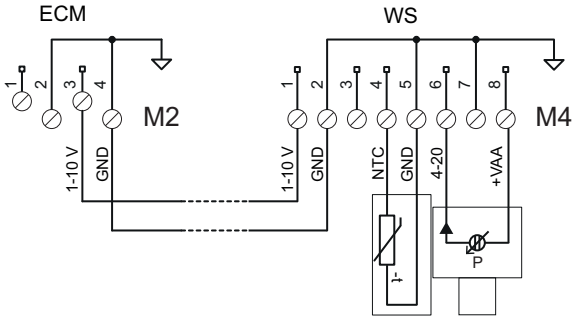

6.6.3 Motorized valve actuator connection

This connection is used to coordinate the operation of the ventilation system with a motorized actuator (valve, damper, etc.) with programmable working range.

Parameters **C7**/**C8** = USP-DIR 0-10V or USP-REV 10-0 V enable the analog outputs **OUT1**/**OUT2** to control an actuator or a motorized valve. This makes a work area available, defined by the **USP**

setpoint and the **UPb** proportional band for external units, and proportional control in direct (DIR) or reverse (REV) mode. This work area interacts by overlapping and integrating in the fan work area.
USP and **UPb** are set by deviation (+/-) from the reference setpoint (**SP1** or **SP2**) for fans.

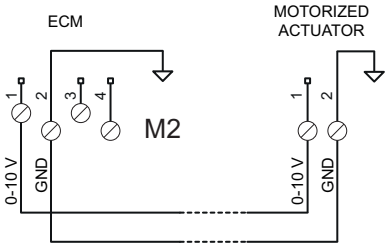

6.7 Relay output connection

6.7.1 Connection to external systems for communicating alarms, faults or operating states.

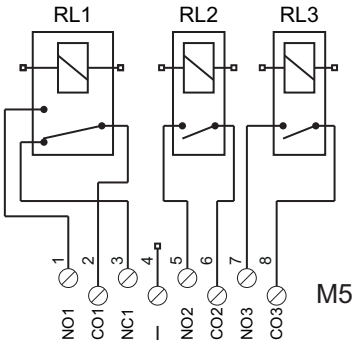

6.8 RS485 Modbus RTU COM0 and COM1 network connection

6.8.1 Correct connection steps between PC-BMS and ECM (COM0 port)

***NOTICE**: follow the indicated steps for correct Modbus connection operations.*

1. Use an outdoor cable specific for outdoor applications with **length under 1000 meters**, for example, a serial cable for LAN ITC BELDEN 15S7D networks (see specifications "BELDEN cable specifications for RS485 connection" on page 108).
2. Make sure the RS-485 line is correctly connected: all network **D0+** terminals must **all be connected to the same conductor**, the same for **D0-** and **REF0** terminals.
3. Lay the data line cable (Modbus network) **from an ECM device to the next**, starting from the Master unit and ending with the last serviced device. Other wiring methods are not permitted.
4. Ensure **sufficient distance between the Modbus network cable and other system cables**, especially from mains cables.
5. **Terminate line ends** (the Master and last serviced device) **with a 120 Ω resistance** (**Rt**). Enable the 120 Ω termination on the RS-485/PC-BMS adapter.

6. **On the last ECM device on the line**, turn the **J1** jumper to 2-1 (ON). **On all other ECM devices**, turn the **J1** jumper to 2-3 (OFF).
7. Ground the cable shield starting from the RS-485/PC-Host insulated adapter **only near the adapter**: the cable will be divided into sections, one for each segment. **Do not connect the REF0 shield** at any point.
8. **Connect the first segment shield to the second shield** and so on. The last segment on the last device side shield remains free.

6.8.2 Modbus network connection diagram between PC-BMS and ECM (COM0 port)

***NOTICE**: the network cable must be connected as indicated in the diagram. Other wiring methods are NOT permitted.*

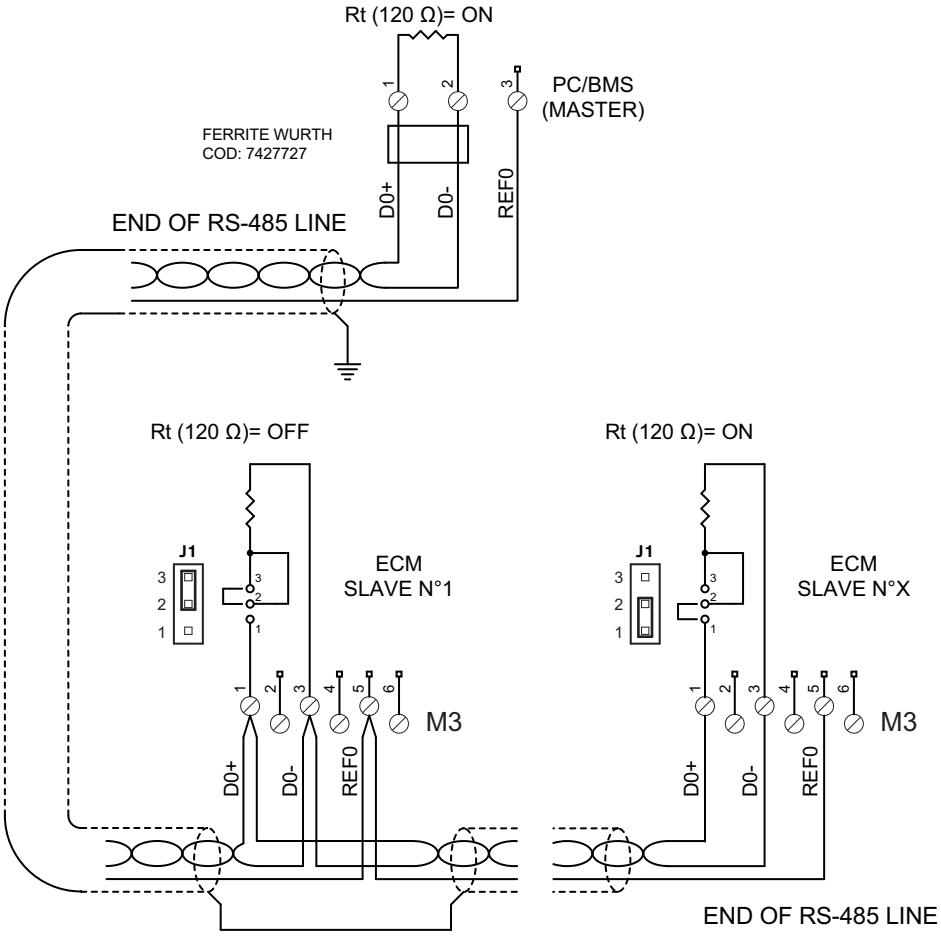

6.8.3 Correct connection steps between ECM and EC fans (COM1 port)

***NOTICE**: follow the indicated steps for correct Modbus connection operations.*

1. Use an outdoor cable specific for outdoor applications with **length under 1000 meters**, for example, a serial cable for LAN ITC BELDEN 15S7D networks (see specifications "BELDEN cable specifications for RS485 connection" on page 108).
2. Make sure the RS-485 line is correctly connected: all network **D1+** terminals must **be connected to the same conductor**; similarly for **D1-** and **REF1** terminals.
3. Lay the data line cable (Modbus network) **from a fan to the next**, starting from the Master unit and ending with the last serviced device. Other wiring methods are not permitted.
4. Ensure **sufficient distance between the Modbus network cable and other system cables**, especially from mains cables.
5. **Terminate line ends** (the Master and last serviced device) **with a 120 Ω resistance** (**Rt**). Position the **J2** jumper to 2-1 (ON). **On the last device in the line** assemble a 120 Ω resistance.
6. Ground the cable shield starting from the controller **near the controller**: the cable will be divided into sections, one for each segment. **Do not connect the shield to REF1** at any point.
7. Near the controller, run the cables **D+** and **D-** in a Wurth ferrite ring (product number: 7427727).
8. **Connect the first segment shield to the second shield** and so on. The last segment on the last device side shield remains free.

6.8.4 Modbus network connection diagram between ECM and EC fans (COM1 port)

***NOTICE**: the network cable must be connected as indicated in the diagram. Other wiring methods are NOT permitted.*

