5. Installation

5.1 Wall mount

5.1.1 Outdoor installation

The controller can withstand temperatures below zero only if it is powered. Avoid exposure to direct sunlight.

***NOTICE**: temperature changes. Defective operation. Store the controller at room temperature before installation to avoid condensation.*

5.1.2 Installation in farms

***NOTICE**: ammonia vapors. Avoid installing the controller in the stable. Install it in a separate room.*

5.1.3 Warnings

***NOTICE**: secure the device closed to prevent screws from falling and remaining inside. Always close the unused holes with the plugs. Install the controller vertically with the cable clamps at the bottom.*

5.1.4 Secure the device to the wall

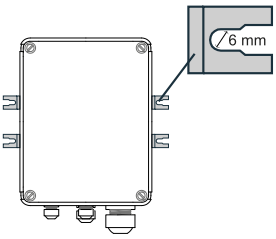

1. Insert the cable clamps or plugs.
2. Drill holes at the areas shown in the image.
3. Mount the mounting brackets
4. Secure the appliance using four screws (not supplied) suited to the wall thickness.

5.2 Installation inside panel

5.2.1 Outdoor installation

The controller can withstand temperatures below zero only if it is always powered. Avoid exposure to direct sunlight.

***NOTICE**: temperature changes. Defective operation. Store the controller at room temperature before installation to avoid condensation.*

5.2.2 DIN bar installation

The controller can be installed on DIN Omega or DIN G bars. Following is the procedure for DIN Omega bars.

5.2.3 Assemble the device on the DIN Omega rail

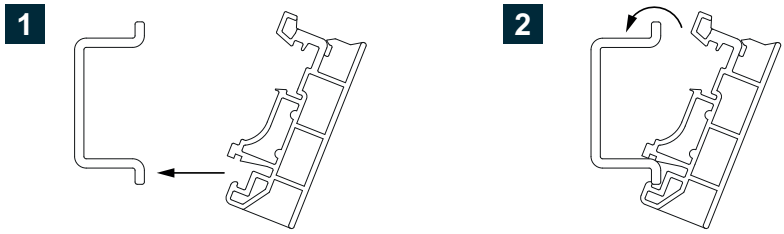

5.2.4 Disassemble the device from the DIN Omega rail

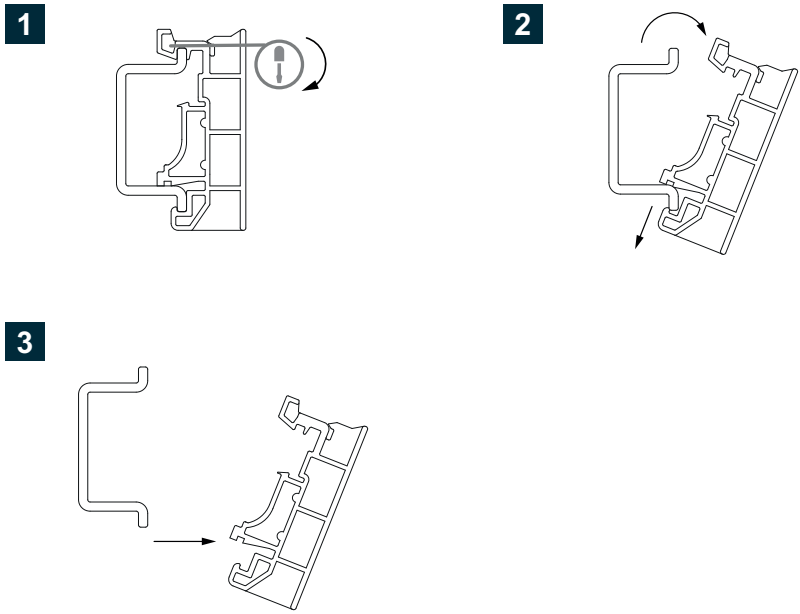

5.3 Electrical installation

Operation reserved for an electrician. Has substantial knowledge in the electrical field. Can understand wiring diagrams and work on live electrical panels, shunt boxes and control devices.

5.3.1 Warnings (230–460 V models only)

WARNING! Live parts. Electric shock. If you have to work on the powered controller, always do it in the presence of a second person. Block remote controls and any power switches.



WARNING! Electrocution. Do not power the controller if it is not grounded.

5.3.2 Power cables separate from signal cables

Install the power cables separately from the signal cables and keep the maximum distance possible between cables.

In case of intersection, install with a 90° angle.