6. Connections

6.1 Power supply wiring and power output for motor(s)

6.1.1 Power wiring diagram and single output load (DRM308, DRM312, DRM320)

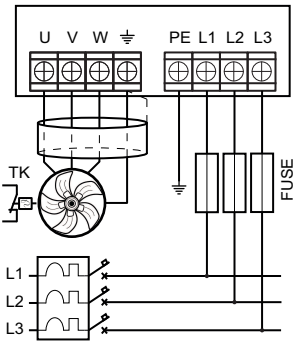

6.1.2 Power wiring diagram and output x4 load (DRM308, DRM312, DRM320)

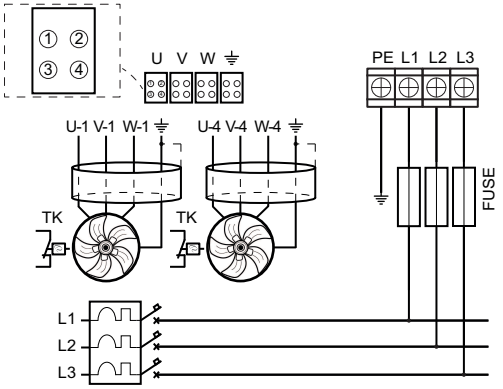

6.1.3 Power wiring diagram and single output load (DRM320 and DRM328)

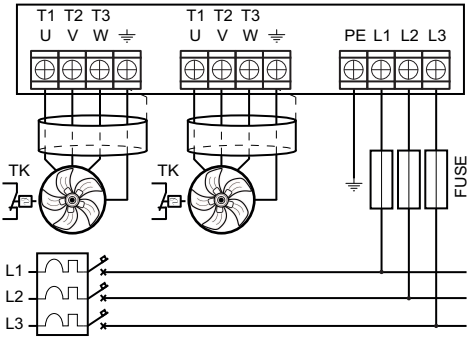

6.1.4 Power wiring diagram and output x 8 load (DRM320 and DRM328)

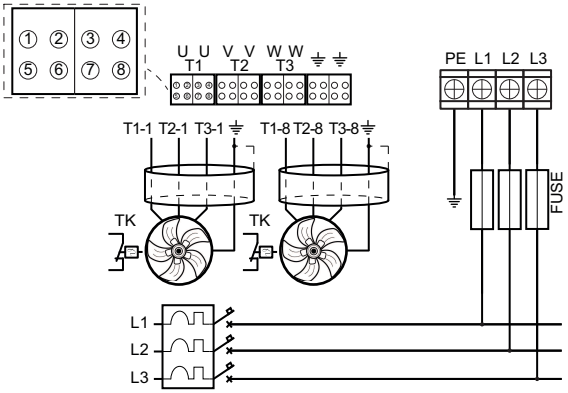

6.2 Connection to analogue inputs

***NOTICE**: for connections longer than 30 m, use a shielded cable and connect the shield directly to ground.*

6.2.1 Connection to inputs with 0–10 V signal

The connection of a potentiometer for manual control or, alternatively, a remote controller with 0–10/10–0 Vdc output is illustrated in the diagram. If you use a shielded cable, ground the shield directly.

This connections requires setting switch 1 of DIP switch SW1 to Off.

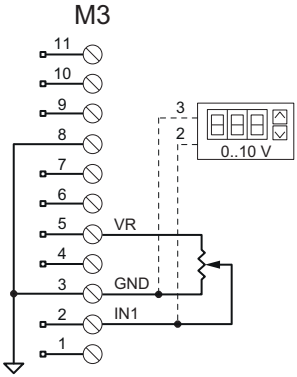

6.2.2 Connection for inputs with 4–20 mA signal

The connection of a potentiometer for manual control or, alternatively, a remote controller with 4–20/20–4 mA output is illustrated in the diagram.

This connection requires setting switch 1 of DIP switch SW1 to On.

Signal taken from + 24 Vdc

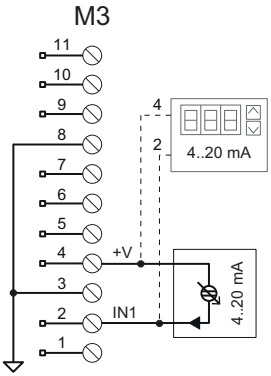

With grounded return signal

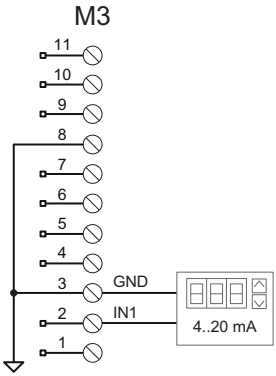

6.2.3 Connection for input with PWM signal

The connection to a remote connection with PWM 3-30 V/10 mA output is illustrated in the diagram.

This connections requires setting switch 1 of DIP switch SW1 to Off.

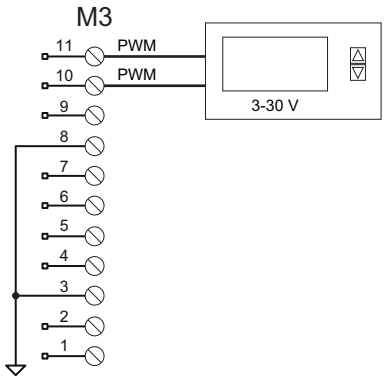

6.3 Auxiliary On/Off inputs connection

6.3.1 Start/stop and TK contacts connection

The diagram shows the contact connections for the remote Start/Stop command and the contact for connection of the motor overload protections. The function of the contact can be configured with DIP switch SW1. See "DIP switch SW1" on page 12.

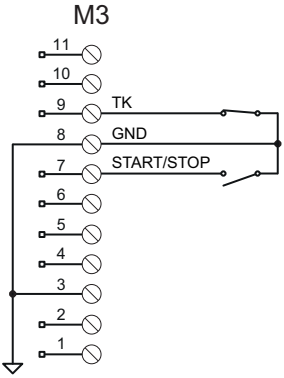

6.4 OUT analog output connections

6.4.1 Power Slave unit connection

This connection is indicated for a Master unit or one or more Slave power units.

The connection enables the **OUT** analog output to transmit the direct regulation command to the connected Slave units, setting the same operating speed for all connected fan units. The regulation mode is fixed (see "Control output OUT 0-10 V" on page 27) and does not depend on switch 2 of DIP switch SW1.

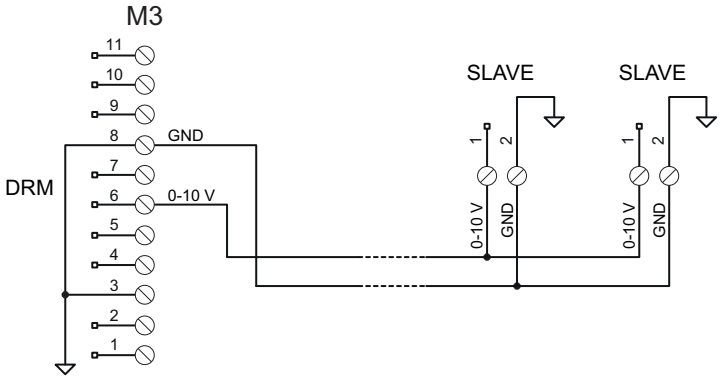

6.5 Relay output connection

6.5.1 Connection to external systems for communicating alarms, faults or operating states.

