ITALIANO

ENGLISH

FRANCAIS

DEUTSCH

ESPAÑOL

AWManager

Instruction for: **AIR & WATER Manager**

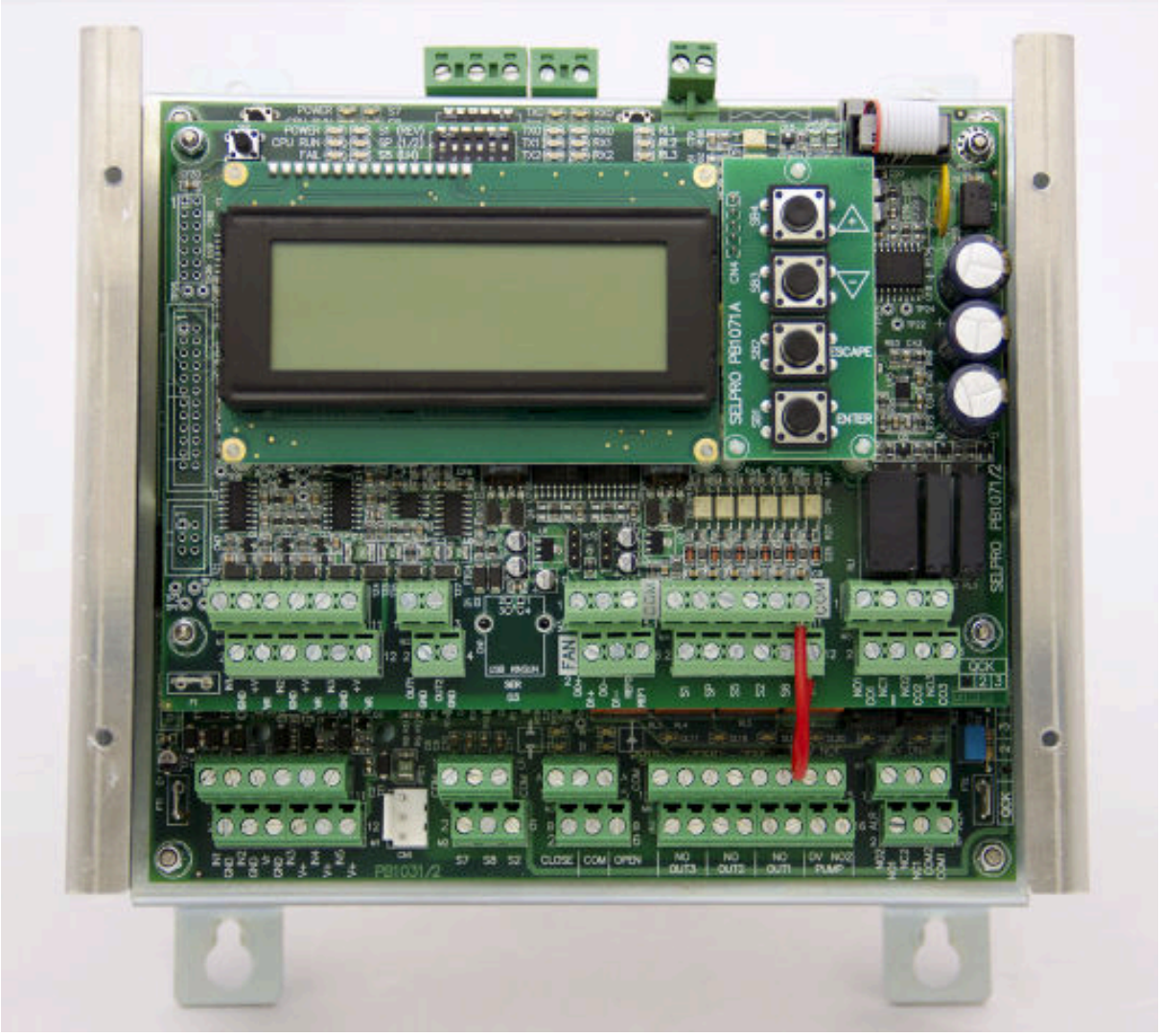

SELPRO

ITALIANO

ENGLISH

STANDARDS - The products are provided for incorporation in machines as defined in the EC. Machine Directive **2006/42/CE** and subsequent modifications.
• **PED 97/23/CE**
• Directive **2004/108/CE** and subsequent modifications. Electromagnetic compatibility.
• **Low tension** - Reference Directive **2006/95/CE**
However it is forbidden to operate our equipment in advance before the machine incorporating the products or making part thereof has been declared conforming to the EC Machine Directive.
PRECAUTIONS: Accident warning concerning possible personal injury or equipmentdamage due to inattention to the instructions.
A) For moving, installing and maintenance operations it is obligatory to:
1 - Employ authorized personnel only for using moving equipment (cranes, forklift elevators, etc.).
2 - Wear work gloves.
3 - Never stop below a suspended load.
B) Before proceeding with the electrical wiring it is obligatory to:
1 - Employ only authorized personnel
2 - Make sure the power line circuit is open
3 - Make sure the main switch on the general power panel is open and padlocked in this position.
C) Before proceeding with the collector/distributor connections it is obligatory to:
1 - Employ only authorized personnel
2 - Make sure the supply circuit is closed (no pressure).
3 - When performing welding operations, make sure the flame is not aimed toward the equipment (insert a shield if required).
D) DISPOSAL: SELPRO products are made of:
Plastic materials: polyethylene, ABS, rubber.
Ferrous materials: iron, stainless steel, copper, aluminium (possibly treated).
Refrigerant liquids: follow the instructions relevant to the equipment installation.

FRANCAIS

DEUTSCH

ESPAÑOL

ENGLISH

PREMISE

The AWS controller regulates the spray systems. It can be supplied in two versions :

1) For machines equipped with EC motors ;
electric-pannel-board in combination with ECM controller

AWM (ECM + AWS) for Electric Panel

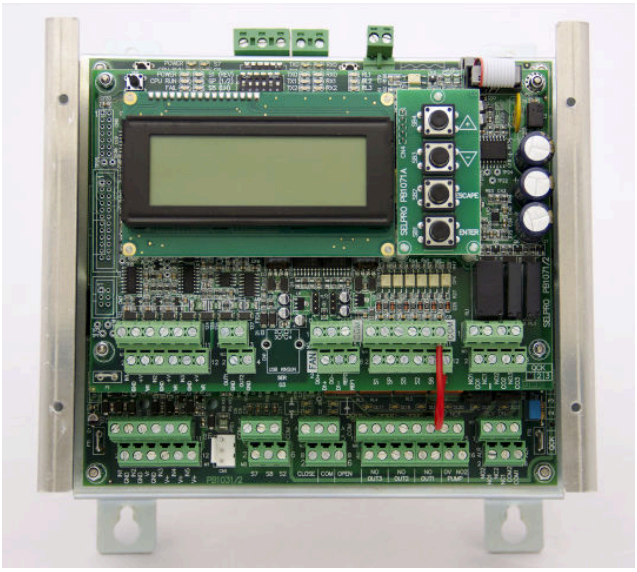

2) For others configuration the controller AWM
is inserted in IP 55 box

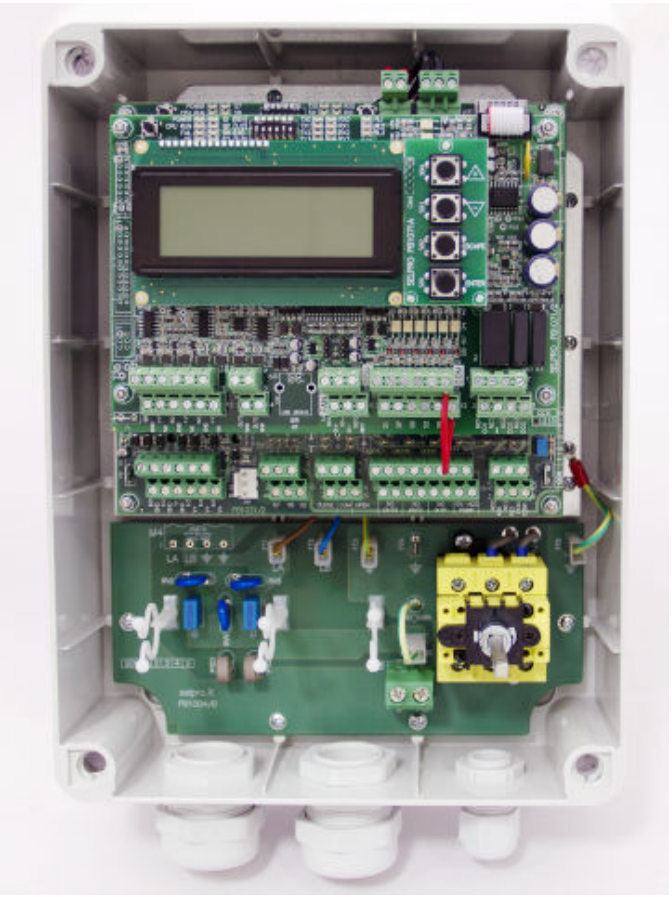

INDEX

Par.	Description	Page
I	PRESENTATION AWM (Air-Water-Manager) Controller	5
II	ARRANGEMENT OF CONNECTION, DISPLAY AND COMMAND PARTS AWM	6
III	INSTALLATION AND ELECTRICAL CONNECTION AWM	7
	ISTALLATION	7
	POWER SUPPLY VOLTAGE	7
	CONNECTION OF SENSORE AND COMMAND SIGNALS	7
IV	SELECTION OF AWM	8
V	RECALL AWM DEFAULT CONFIGURATIONS	8
	SAFETY REGULATIONS	9
1.0	INTRODUCTION	10
1.1	OVERVIEW	10
1.2	TECHNICAL SPECIFICATIONS	11
1.3	MECHANICAL MEASUREMENTS	14
	1.3.1 IP 00 ELECTRICAL PANELS INTERNAL VERSION	14
	1.3.2 IP 55 EXTERNAL VERSION	15
1.4	ARRANGEMENT OF CONNECTION, DISPLAY AND COMMAND PARTS	16
2.0	QUICK GUIDE FOR FIRST TIME START UP	19

ENGLISH

Par.	Description	Page
3.0	**INSTALLATION AND ELECTRICAL CONNECTIONS**	**21**
3.1	INSTALLATION	21
3.2	POWER SUPPLY CONNECTION	21
	3.2.1 VERSION IP 00 FOR MONOPHASE 400V - 50/60 Hz, VOLTAGE SUPPLY	21
	3.2.2 VERSION IP 55 FOR MONOPHASE 400V - 50/60 Hz, VOLTAGE SUPPLY	22
3.3	CONNECTION OF SENSORS AND COMMAND SIGNALS	22
	3.3.1 M1 : ANALOG INPUTS	22
	3.3.2 M2 : ON/OFF LOGIC INPUTS	24
	3.3.3 CONNECTION OF COMMAND SIGNAL FROM RGM/AURT	25
	3.3.4 CONNECTION OF COMMAND SIGNAL FROM ECM/ WMC2, DSV/ARUS	25
	3.3.5 M3: COMMAND OUTPUTS FOR MOTORIZED MODULATING VALVES	25
	3.3.6 M4: COMMAND OUTPUTS FOR OPEN/CLOSE MOTORIZED VALVES	28
	3.3.7 M5: RL1 AND RL2 SERVICE RELAY	33
	3.3.8 OPTIONAL MODULE FOR SERIAL RS485 (MODBUS)	34
4.0	**DISPLAY AND COMMAND DEVICES**	**36**
4.1	DISPLAY AND PUSH - BUTTONS	36
4.2	ADJUSTMENT OF DISPLAY CONTRAST	37
4.3	CONFIGURATION DIP - SWITCH : SW1	37
4.4	MANUAL ACTIVATION OF TOTAL DRAINING	37
4.5	WARNING LEDS	38
5.0	**FUNCTION MODE**	**39**
5.1	ACTIVATION CONDITIONS	39
5.2	SUPPLY WITH OPEN/CLOSED ELECTROVALVES	39
5.3	SUPPLY WITH MODULATING VALVES	41
5.4	DRAINING WATER FROM UNIT	43
6.0	**PARAMETERS**	**44**
6.1	LIST OF PARAMETERS	44
6.2	VALUES OF MEASURES QUANTITIES AND PARAMETERS	45
	6.2.1. MEASURES QUANTITIES	45
	6.2.2 PARAMETERS	45
6.3	FUNCTION PARAMETERS	46
	6.3.1 DEFAULT CONFIGURATIONS	46
	6.3.2 RECALL OF DEFAULT CONFIGURATION	47
6.4	DISPLAY OF PARAMETERS	48
6.5	CHANGE PARAMETERS	49
	6.5.1 “SPRAY PARAMETERS”	49
	6.5.2 “SET UP PARAMETERS”	51
	6.5.3 “POGRAMMABLE ALARMS”	52
	6.5.4 “PID PARAMETERS”	54
	6.5.5 “MODBUS PARAMETERS”	55
	6.5.6 “REAL TIME CLOCK”	56
7.0	**MANUAL COMMAND OUTPUTS**	**57**
8.0	**ALARM AND ATTENTION MESSAGES**	**58**
9.0	**PRODUCT DISPOSAL**	**59**

AWM Air-Water-Manager

ENGLISH

The ECM + AWS controllers became the AWM digital processor used for DRY & SPRAY appliances.
Designed to regulate the battery speed of fans with EC motors and to control simultaneously, and in a coordinated manner, the optimum amount of spray water .

AWM consists of two units already known: ECM and AWS, which share the display and four buttons.

N.B. In order to manage the ECM + AWS controller it is essential to know the ECM and AWS users manuals.

The EC Motors regulation section has the same functionality of the ECM controller, it uses the signals from the three programmable analog Inputs in :

- Voltage (V),
- Current (mA)
- Resistance (ohm), for NTC probe (10kohm@25°C)

suitable to read the signals produced by transducers of Temperature (° C) Pressure (bar) Flow rate (mc), etc .
The possible adjustments can be of the following types:

- P (proportional)
- PID (proportional, integral, derivative).

  PID (proportional, integral, derivative) with AUTO - Tuning system.

The EC Motors command can be via 0-10Vdc analog signal, or via RS-485 with Modbus protocol (RTU std.)

The section for controlling the spray has the same functionality of the AWS controller and uses the signals coming from four analog inputs in current (mA) or resistance (ohms), suitable to read the signals produced by transducers of Pressure (bar) or Temperature (° C).

There are two modes for adjusting the amount of water delivered by the nozzles:

- One, two or three valves command Open / Close (solenoid valves or motorized valves); each valve supplies one, two or three ramps of nozzles that work in all / nothing mode.
- One or two modulating two-ways valves command, that regulate the water flow to the nozzles, by dosing the amount of water supplied to maintain the set point. The use of one or two valves depends on the water supply pressure: up to 8 bar is simply a valve, more than 8 bar, and up to 16 bar, it is necessary to use two valves placed in series.

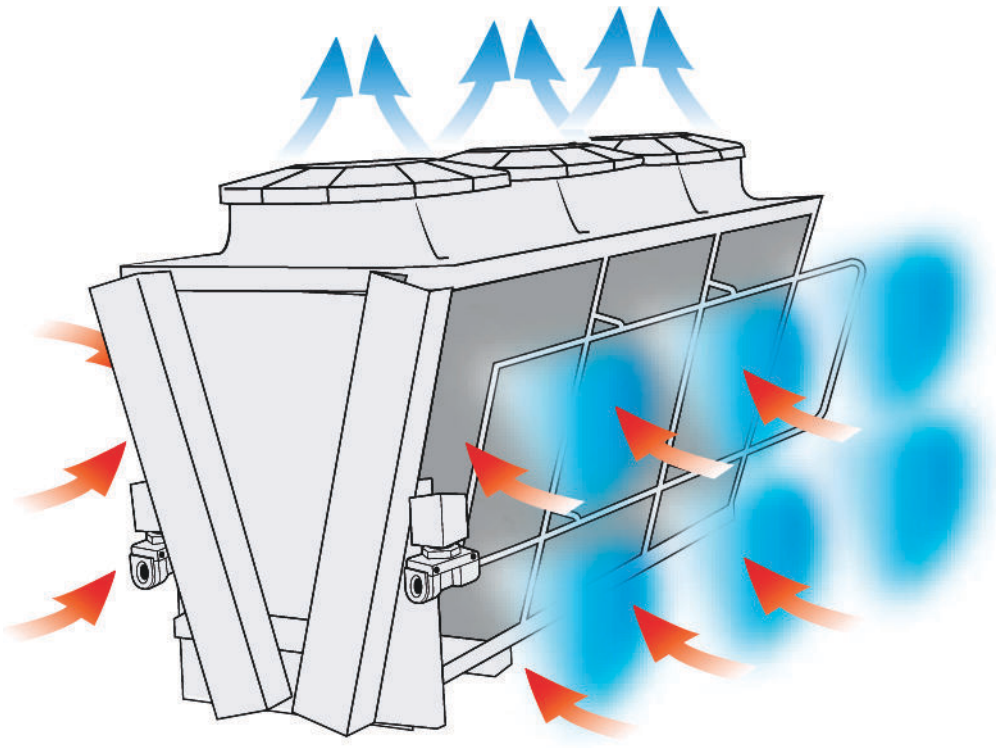

AWM COMPONENTS ARRANGEMENT

Fixing box, protected with iron case

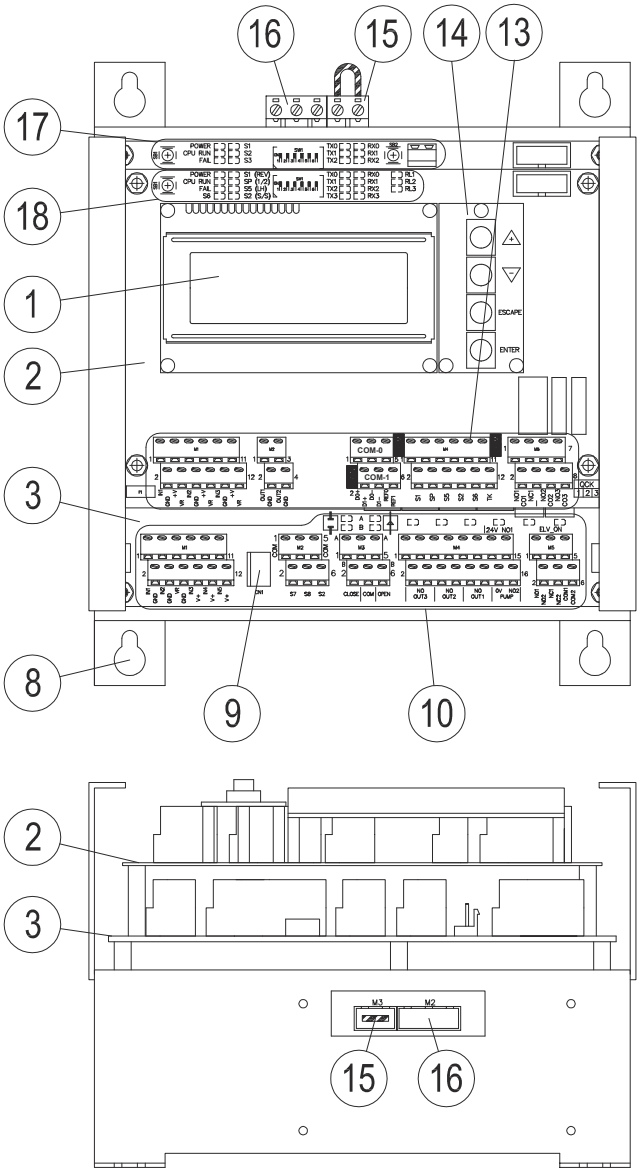

IP55 in GW® plast CABINET

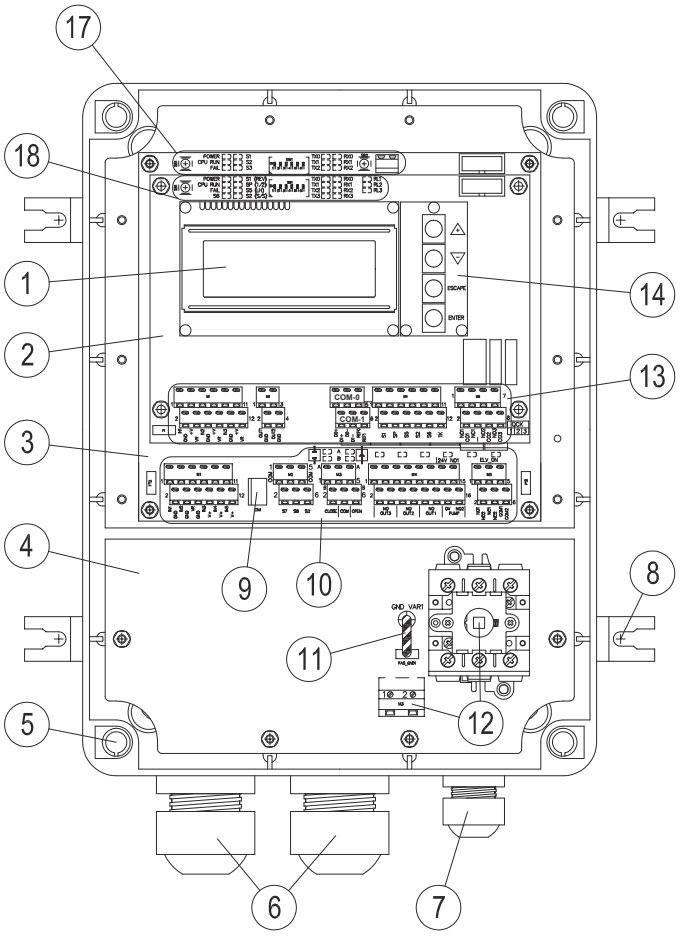

1	Backlit LCD Display , 4 alphanumeric lines with 20 characters
2	Upper board : management of fans with EC motors (PB1071) ECM
3	Lower board : spray management (PB1031) AWS
4	Power board with single phase input (PB1004)
5	Holes for clamping screws sealable for lid closure
6	Multi-hole M32 cable gland with 8 holes Ø5,0mm
7	M20 cable gland for tightening Ø10,0mm to Ø17,0mm cables
8	External support brackets for wall mounting
9	CN1 Connector for linking external button for the manual drain command
10	Lower board: cable connectors ,signals and relay status LEDs for spray management - AWS
11	Bridge with Faston for opening varistors circuit (insulation test)
12	Main switch and connection terminals for power and grounding
13	Upper board cable connectors EC fan motors management signals - ECM
14	UP(+) / DOWN (-) / ESCAPE / ENTER Buttons plug PB1071A)
15	Connection terminals with bridge for varistors circuit opening (insulation test)
16	Connection terminals power supply and protective ground
17	Lower board: service buttons, monitoring led, Dip -Switch predispositions - AWS
18	Upper board: reset button (SB1),monitoring led, Dip -Switch predispositions - ECM

AWM INSTALLATION and ELECTRICAL CONNECTION

Installation

Install the unit in places with a temperature range between -20 ° C and +50 ° C, otherwise it will seriously compromise the functioning and integrity of the unit itself. For more details see chapter 3 of the AWS instructions.

Power Connection

The AWM controller is designed for 20/24VAC~ or 230 to 400 V~ +20%/-10% 50/60Hz
For more details see chapter 3 of the AWS instructions.

Connecting Sensors and Command Signals

The AWM controller is provided for direct connection of sensors, signals and auxiliary contact supporting the adjustment.
The connection terminal blocks are located on two separate floors, dedicated to the two functions carried out from the unit

☒ Upper Board : signals dedicated to control EC Motors fans - ECM

☒ Lower Board : signals dedicated to Spray control - AWS

The figure below shows a breakdown of the terminal connection present on the two boards. For more details see ECM and AWS instructions

M1	Analog transductors and Command signals
M2	0-10V Outputs, Analog peripherals
M3	Isolated RS -485 COM0 and COM1 Serial Links
M4	Logic inputs ON -OFF
M5	RL1 , RL2 , RL3 Relays

UPPER BOARD: ECM

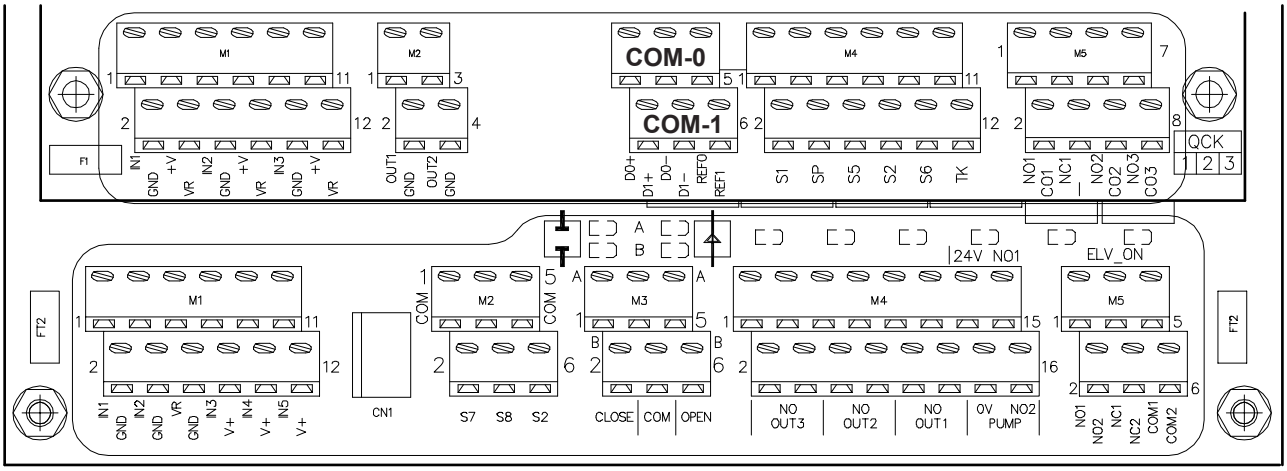

LOWER BOARD: AWS

M1	Analogic Inputs
M2	Logic Inputs ON -OFF
M3	Command Outputs Motorized Modulating Valves
M4	Command Outputs Valves Open/Close and Plant Power Supply
M5	Service Relays

AWM FUNCTIONS SELECTION

A - By switching on the LCD screen for a few seconds the display shows the following page:

1		Mon -Fri AWM rel. X. xx		Manufacturer Name - Controller Model - Software Release X/Y
2		EC Fans & Spray		Overview of firmware installed
3		Manager & Controller		
4		PID & MODBUS inside		

B - Soon after comes the home page corresponding to the prearranged configuration for EC Motors command, for more details see chapter 3 and followings for ECM instructions.

C - If the unit is configured to manage fans via the 0 -10V COM-1 analog output by pressing the key "ENTER" you can directly access the functions of the spray section (AWS), for more details see chapter 4 and followings for AWS instructions.

D - Instead, if the unit is configured to handle the EC motors fans via the serial COM-1, by pressing "ENTER" the following menu choices appears:

1		---- XXXX --- HH . MM		System Status: no alarm working, Hours and Minutes RTC
2		UP to view fans		Function key " UP "
3		DOWN to view spray		Function key " DOWN "
4		ESC to abort		By pressing " ESC " you go back to " B "

E - By pressing " UP " an examination of the status of the individual EC motors starts. For more details see par. 5.3 e 5.4 of the ECM instructions.

F - By pressing " DOWN " the display passes to the spray sect. functions and the AWS home page is displayed, for more details see chapter 4 and followings for AWS instructions.

AWM DEFAULT CONFIGURATION RECALL

The following procedure allows to change the default configuration of the AWS section.
The available configuration are described in section 6 of the AWS instructions.

A - Enter the spray sect. functions (AWS) by using the procedure described in the previous chapter. 4.
B - The display shows one of the pages described in section 4.1 of the AWS manual.
C - Simultaneously press the "UP" and "ENTER" key, on the display appears:

1		----- Operation Mode -----		System Status: Change of the work configuration
2		--- Now ---		
3		Available		
4		ENT : select ESC : exit		"ENTER" key : select, "ESCAPE" key : exit and go back to home page

D - Releasing the " UP " and " ENTER " keys, a message appers on the display corresponding to the actual configuration :

1		----- Operation Mode -----		System Status: Change of the work configuration
2		S.Type 20 Relay 2		Actual configuration initials: as shown in the table in par. 6.3.1 of (2)
3		IN3 = 25 bar		Full scale pressure transducer used on IN3 (supply)
4		ENT : select ESC : exit		"ENTER" key : select, "ESCAPE" key : exit and go back to home page

E - With the "UP" and "DOWN" keys, you can scroll across the display lines N°2 and N°3 of the available operating modes, see par. 6.3.1

F - Once the desired configuration has been identified, pressing "ENTER" the display shows the following:

1		----- Operation Mode -----		System Status: Change of the work configuration
2		S.Type 50 V. Mod 2		Actual configuration initials: as shown in the table in par. 6.3.1
3		I3=25 I4=25 I5=25 bar		Full scale pressure transducer used
4		ENT+ESC : save		Press the keys "ENTER" + "ESCAPE" to have the new configuration

G - To exit without making any changes, press the ESCAPE key, to go back to step (B).

H - To confirm your choice, press the keys ENTER + ESCAPE: on the dispaly, at line N° 4, the message "Updating, please wait" appear. The selected configuration is saved and used immediately, replacing the previous one.

The procedure is completed, return to step (B)

ITALIANO

ENGLISH

FRANCAIS

DEUTSCH

ESPAÑOL

ECManager

Instruction for: **EC FANS CONTROLLER**



SELPRO

ECM EC Manager controller

*** ATTENTION ***

An experienced operator should install the device and carefully connect the electrical circuit, securing the flexible cables to their final position, then start it up.
Any improper installation of the ECM controller could cause damage to items or persons; please follow the instructions in this manual and any current laws on safety.
Installation should be in compliance with the end use expected and the device should undergo maintenance where required, in a suitable manner, protecting the safety of people, pets and material goods.
Check that the devices have been suitably packaged upon receiving the merchandise; in case of any problems due to transport, these should be reported immediately to the carrier or within the terms set by law.
The buyer shall ensure in advance that the product is suitable for its intended use, taking any consequent risk and responsibility. The ECM controller was planned to generate an adjustment command after a command signal (which could be in mA, Vdc, Ohm).
The device was built for industrial use and hence complies to standards for industrial environments. The device should not be used for purposes other than the aforesaid. Our company shall not be held liable for any accidents, loss or damage incurred if these instructions are not observed.

- We shall not be held liable for any errors in catalogues, publications or other written documentation; the information in this manual is not binding and we reserve the right to make any changes we deem necessary for production purposes or to improve function and performance levels to our products at any given moment without forewarning.

SAFETY LAWS

This device has been planned to offer the best and safest functioning provided it is used and installed by trained staff in a suitable electrical environment.
When installing the controller ESPECIALLY MAKE SURE to:
• Carefully follow instructions in this manual and observe current safety measures
• DO NOT tamper with and DO NOT disassemble the components inside the controller; if this is done WARRANTY SHALL BE VOID and damage can be incurred. The controller does not contain components which can be directly repaired by the user.
• The controller should be efficaciously grounded; the installer should make sure that grounding is made based on current standards and laws.
• The user should be protected from electric current; the adjusted devices should be equipped with protection against any overloads in compliance with current laws.
• DO NOT power the controller without the protection lid and in no instance touch the electrical parts of the circuit when power is on.
• Reassemble and always check that the external protection lid is perfectly sealed.
• DO NOT alter or damage the identification tags of the equipment.

Before proceeding with installation, we kindly invite you to carefully read this manual where the required procedures for the proper start-up of the controller ECM are explained

DESCRIPTION OF THE SYMBOLS USED IN THIS MANUAL

	! Attention !
	Important Information
CE EMC LVD	Accordance with: CE marking, Electromagnetic Emissions, Low Voltage
Factory Default (Yellow line)	The highlighted features are STANDARD factory predispositions
	PRODUCT Disposal

1.0 PRESENTATION

The ECM controller for "EC" fans was built to the highest quality standards, using highly reliable electronic components, subjecting it to functional tests that ensure the use of the product for at least 60,000 hours of continuous operation without problems.

1.1 OVERVIEW

The ECM controller is a multifunction digital unit with microprocessor created to simultaneously command several motorized actuators in a coordinated way, using signals coming from three analog inputs which can be programmed in voltage (V), current (mA) or resistance (ohm), suited to read signals produced by transducers of Temperature (°C) and Pressure (bar) .
Adjustment can either be of the P type (proportional) or PID (proportional, integral, derivative) see par. 6.4.2, par. 6.4.4.
The PID adjustment CANNOT be used with WS spray systems…..
Connection to peripheral devices occurs through:

- Two 0 -10 V analog outputs for external units with analog command which can be programmed.
- A half - duplex RS - 485 isolated serial line managed by the MODBUS (RTU) protocol MASTER mode for the command and control of the intelligent peripheral units.
- A half - duplex RS - 485 isolated serial line managed by the MODBUS (RTU) protocol SLAVE mode for the optional connection to the external supervising system.

Six On/Off logic inputs which ensure the different functioning modes can be turned on, the choice between two groups of parameters, different speed control settings for fans.
Three relay outputs for alarm contact and other auxiliary functions.
The ECM device can function in Master or Slave mode by pressing one of the 12 default configurations on the keypad, completely parameterized, with the possibility of changing the parameter values, (see par 6.2.)
It has been configured to simultaneously control one or more fans with command 0 -10V or intelligent units with serial RS485 command (fans with EC motors) and simultaneously Spray units models AWS, with command 1-10V.
The 0 -10 V output for the fan command can be used by devices to adjust speed which function in the following modes: phase cut, voltage steps, inverter, or by one or more fans with an EC Motor (see par. 2.2.3 , par. 5.2 and par. 6.1)
For fans with "EC Motors ebm -papst" the RS485 isolated serial line can be used, especially dedicated to control them and managed by the ModBus RTU protocol in MASTER mode, based on document " ModBus parameter specification for ebm-papst series 84/112/150 V3.02 25.11.2009."

The set -up of the serial channel is fixed and cannot be changed and corresponds to builder requirements: baudrate19200, 8 bits, 1 bit stop, even parity .
It uses the serial channel COM_1 with these functions:

- Manages a maximum of 32 EC fans with address which can be freely set from 2 to 247.
- Automatic sequential addressing and change of address of each single fan; if replacements are made, the update of the new EC fan parameters occurs together with addressing.
- Acquisition of the EC fan map on the ModBus network. Transmission of the speed reference at each change in BROADCAST mode; if there are no changes, the refresh occurs every 5 seconds. The operative mode programmed in the EC Motors is "closed loop speed control ," which allows for uniform speeds, greater details in the aforesaid ebm - papst document.
- Reading at set times of the state and all adjustment parameters of each EC Motor in the map, views on the display through a global information page and three detailed pages for each EC fan.
- Warning, without function block, of the EC fans in the map which do not answer or which give an error message, their state can be viewed in the information pages of each machine.

For further details see par. 2.2.4 , par. 5.3 and par. 6.1 .
The other RS485 serial line in (COM_0) is configured to be connected to a "PC host" and is managed by the ModBus RTU protocol in SLAVE (peripheral) mode, the parameter specifications are described in document "ModBus RTU description for ECM version 2.0 SELPRO 1/10/2010".
Further details on specifications of the ModBus protocol are available at the website "ModBus.org;" the following documents have been especially used and are to be considered fully applicable:

- ModBus Over Serial Line, Specification & Implementation Guide V1.0
- ModBus Application Protocol Specification V1.1

A special control and supervision "PC host" software called "Clima -Sinergy" is available and can negotiate with one or more ECM slave units.
The following GateWays for connection to networks managed by non ModBus protocols are available, like Lonwork, BacNet, etc….

In fig. 1 the function of controller ECM is illustrated.

Fig. 1

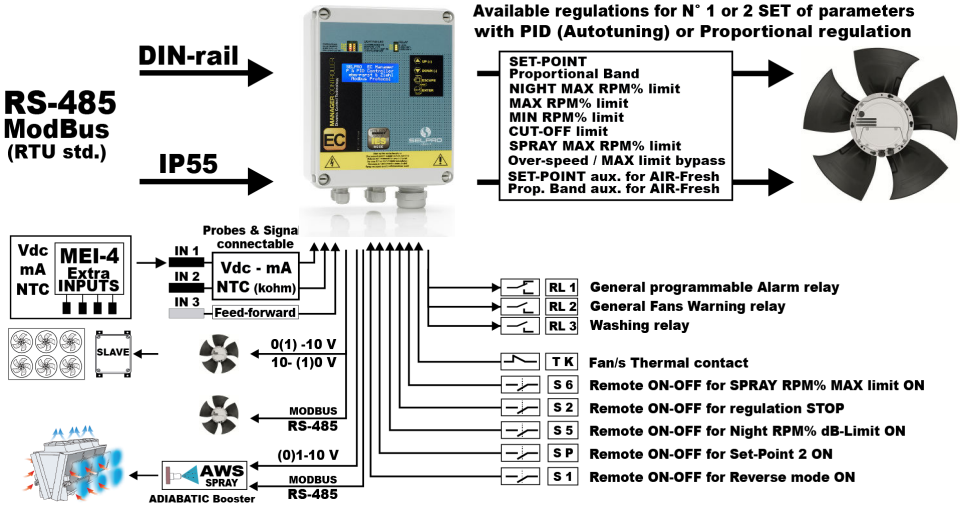

1.2 TECHNICAL SPECIFICATIONS

POWER SUPPLY	Voltage VAC 50/60Hz	DIN-rail	Monophase 20/24V ~ and N/Ph or Ph/Ph from 230V ~ to 400V ~ +20%/-10% (others VAC on request)
		IP 55	Monophase Netral/Phase or Phase/Phase from 230V ~ to 400V ~ +20%/-10% (others VAC on request)
	Overvoltages Protection		For installation category II (4 kV)
POWER	Command circuits		10 VA
FAN MANAGEMENT	ANALOG 0-10Vdc		The speed command for Fans (external Slave unit or EC 0-10V fans) uses the analog output OUT-1
	Serial RS485		The speed command for EC ebm-papst fans uses the isolated RS485 serial COM_1.
FUNCTIONAL SPECIFICATIONS	CONTROLLER MASTER "P" MODE PROPORTIONAL		The speed command for fans changes to keep the measured magnitude of the transducer with ruling signal which is higher (factory default) or lower in value within the (Pb) differential between the two connected to the inputs. Action can be either: DIRECT: output increases as input increases (factory default) INVERSE: output decreases as input increases. The analog output OUT -2 generates a signal 1-10V per Spray Unit which changes proportionally to the main input signal, considering the SP, USP and UPB current values.
	CONTROLLER MASTER "PID" MODE PROPORTIONAL INTEGRAL DERIVATIVE		The speed command for the fans changes to maintain the measured magnitude of the transducer with prevailing signal at Set Point (SP), with higher (factory default) or lower value, between the two connected to inputs. Action can be either: DIRECT: output increases as input increases (factory default) INVERSE: output decreases as input increases. The analog output OUT -2 generates a 1 -10V signal per Spray Unit which varies in proportion to the main input signal, considering the current values of SP, USP and UPB .
	Controller Slave		The speed command for fans changes based on the main command signal received during input. Action can be either: DIRECT: output increases as input increases (factory default) INVERSE: output decreases as input increases. The analog output OUT -2 generates a signal 1-10V per Spray Unit which changes proportionally to the main input signal, considering the USP and UPb current values.
INPUT SIGNAL	Input IN1, IN2 for analog transducers:		The device has been set up to function with the following input signals:

Input Signal	Ri: Input Resist.	MASTER Configurations	SLAVE Config.
NTC (*)	-	rtE -01 (*) & rtE -02	-
0 – 20 mA	100 Ohm	-	rS -020
4 – 20 mA	100 Ohm	rPr420 -rPr015 -rPr025 -rPr030 -rPr045	-
0 – 5 Vdc	10 kOhm	rUu -05 - rUu030	-
0 – 10 Vdc	10 kOhm	rUu010	rS -010

(*) FACTORY SET UP - One of the aforesaid adjustment modes can be selected with the keypad and the preset parameter values changed.

	Input for (logic) ON/OFF contacts	S1 (D/R) Select Mode: Direct/ Reverse SP (1/2) Select Work Bench Parameters: Set-Point 1/ Set-Point 2 S5 (AUX) Input limit Maximum Night Speed Adjustment S2 (S/S) Stop / Start remote control (simultaneously for Motor and Spray EC) S6 (Spray On) Input limit Maximum Speed with Spray functioning TK (TK) Alarm inlet via MODBUS
SERIAL LINE	Serial Line RS485 COM_0	Isolated RS485 serial line called COM_0 : dedicated to the connection to "PC Host," managed with ModBus RTU protocol in "SLAVE" mode, further details at .1.1
	Serial Line RS485 COM_1	Isolated RS485 serial line called COM_1 : dedicated to the connection with one or more EC ebm-papst fans, managed with protocol ModBus RTU in "MASTER" mode, further details at par. 1.1 COMPULSORY use when the "Serial RS485" mode is chosen to manage fans.
OUTPUT SIGNAL	Analog Output OUT -1	Configured output (default) for the 0-10Vdc command, for SLAVE units or EC motors . Voltage 0-10 Vdc - maximum current 20 mA, with short circuit protection.
	Analog Output OUT -2	Configured output (default) for 1 - 10 Vdc command of "Spray Unit"WS , voltage 1-10 Vdc - maxium current 20 mA , with short circuit protection.
	Transducer Input	N° 2 outputs +22 V -10/+20% 40 mA not stabilized, with short circuit protection.
	Potentiometer Sensor Input	N° 2 outputs +10 V/5 V (automatic switching) stabilized with protection, for sensor input (radiometric transducers) and remote manual control (potentiometer)
	Relay RL1	Contact NO 5Amp 250 Vac, 30 Vdc / NC 3 Amp 250 Vac, 30 Vdc, alarm signal
	Relay RL2	Contact NO 5 Amp 250 Vac, 30 Vdc, warning signal (Warning)
	Relay RL3	Contact NO 5 Amp 250 Vac, 30 Vdc, auxiliary for wash exchange
DISPLAY AND KEYBOARD	Display	Backlit monochromatic LCD display with 4 lines and 20 characters per line
	Keyboard	Four keys with these functions: UP (+) / DOWN (-) / ESCAPE / ENTER

ENGLISH

		LED	Color	Meaning
LED SIGNAL	DL15	PwS	Green	Presence service input for logic card
	DL10	CPU	Green	Intermittent flashing: Microcontroller logic card working
	DL5	FAIL	Red	FAIL: presence of one or more alarms (see table of messages Chap.8)
	DL1	S6	Yellow	Switch on limit of MAX RPM% with WS-SPRAY working
	DL16	S1	Yellow	Switch on REVERSE function (S1 = NC)
	DL11	SP	Yellow	**Switch on adjustments with Set-Point 2 parameters**
	DL6	S5	Yellow	**Input limit of maximum overall RPM (i.e.: for night use)**
	DL2	S2	Yellow	**Presence running allowed**
	DL 17	TX0	Green	Serial 0, presence output data
	DL 12	TX1	Green	Serial 1 , presence output data
	DL 7	TX2	green	Serial 2 , presence output data
	DL 3	TX3	green	Serial 3 , presence output data
	DL 18	RX0	Green	Serial 0 , presence input data
	DL 13	RX1	Green	Serial 1 , presence input data
	DL 8	RX2	Green	Serial 2 , presence input data
	DL 4	RX3	Green	Serial 3 , presence input data
	DL 19	RL1	Green	State of Relay RL1 (lit if RL1 = ON = excited)
	DL 14	RL2	Green	State relay RL2 (lit if RL2 = ON = excited)
	DL 9	RL3	green	State relay RL3 (lit if RL2 = ON = excited)

PROTECTIONS	Protection from overvoltages	In compliance with EN 61000-4-5: overvoltage category II (4 KV)
CONTAINER	Materials	**GW-Plast** 120°C (max temperature 120°C)
	Lock screws	**TPN** Series with tightening torque (in compliance with **CEI 23-58**) max. **2,5 Nm**
	Protection degree	**IP 55**
	Environment pollution	Strong pollution
	Mechanical resistance to shock	IK Degree = 08
	Fire resistant	Category **D**
	Size and Weight	**253 x 196 x 107 mm 1,5 Kg**
INSULATION	Container	Class - I - (use of the grounded protection)
	Command circuits	4000 V between command input and power voltage parts
WORK ENVIRONMENT CONDITIONS	Work temperature	-20 T 50 (from –20 °C to + 50 °C) per temperature < -10 °C use S2 (stand-by adjustment)
	Storage Temperature	**-30 T 85** (from –30°C to + 85°C)
	Vibration	Lower than 1G (9.8 m/s2)
ASSEMBLY	Only vertical wall mount **N° 4 hole Ø 6 mm.**	
ELECTRICAL WIRING	Signal	Clamps for flexible cable **0.14 to 1.5 mmq / 26-16 AWG C section**
	Power Supply	Clamps for flexible cable **0.5 to 10 mmq / 20-6 AWG C section**
TECHNICAL SPE-CIFICATIONS	Directive **2006/42/CE** **Directive 2006/95/CE**	**CEI EN 60204-1** : Machine Safety EN 50178: electronic equipment for use in power installations
	Directive **2004/108/CE**	**CEI EN 61800-3** : Electric operations at variable speeds. Part 3 : electro-magnetic compatibility requisites and special testing methods

IP00 Version for indoor board

DIMENSIONS (mm)			WEIGHT
A	B	C	Kg
127	170	76,5	0,8

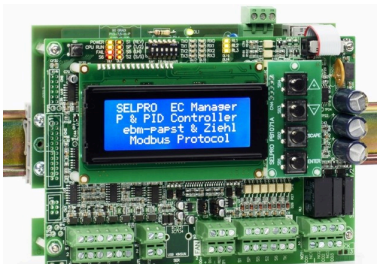

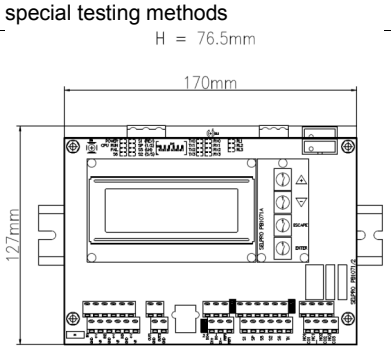

IP55 Version

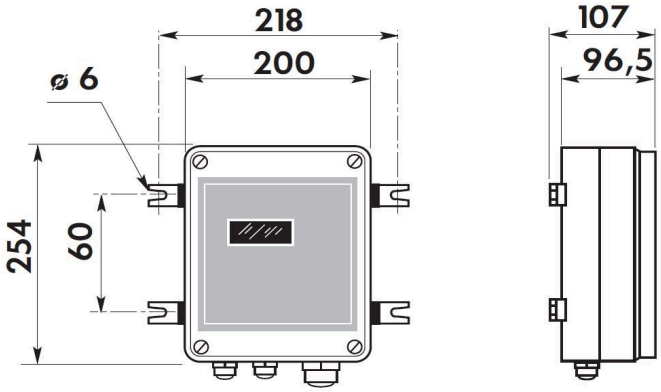

1.3 Arrangement of Connecting units, Display and Command

1.3.1 OPEN RUNNING INDOOR VERSION IP 00 BOARD

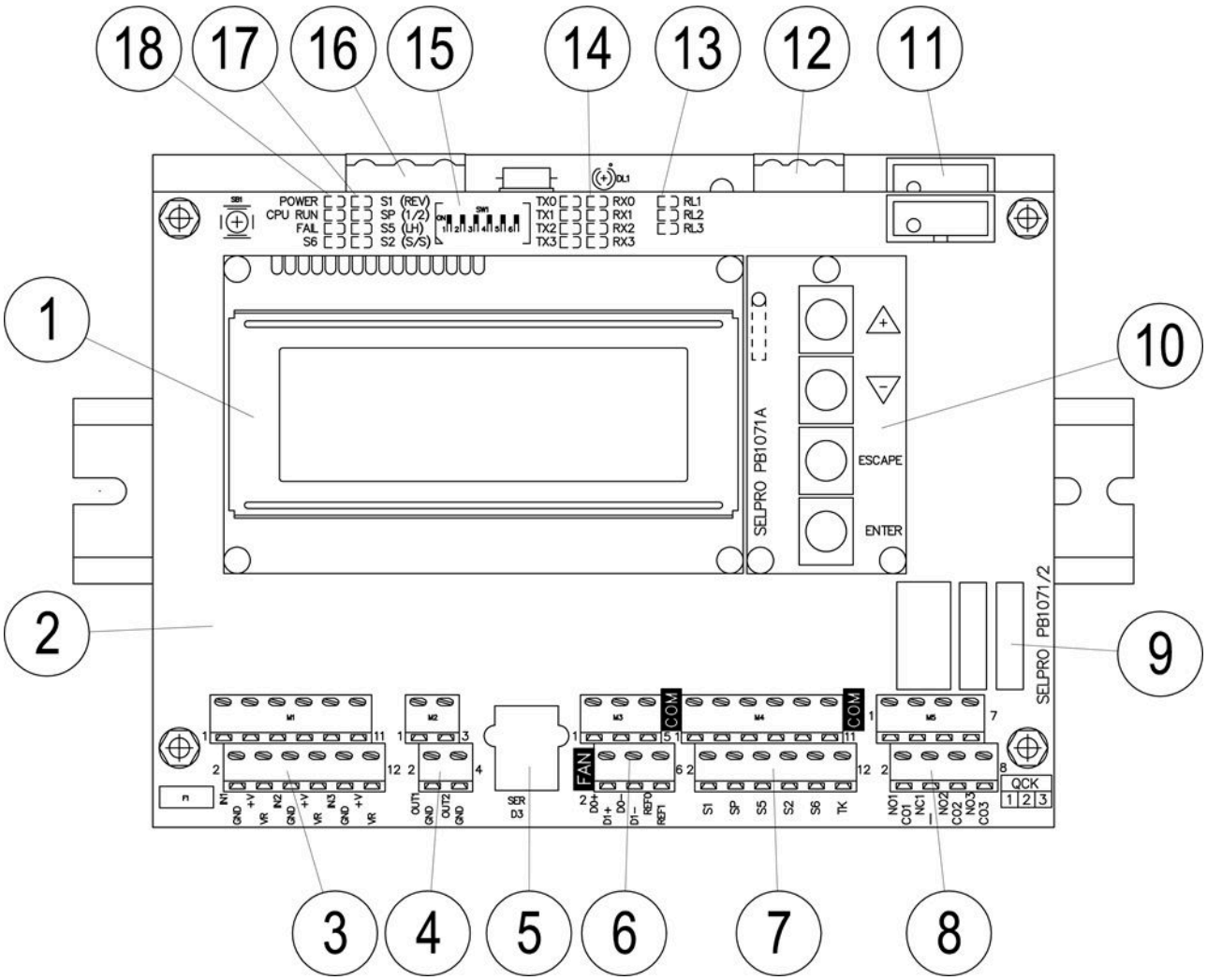

1	LCD backlit display, 4 alphanumeric lines with 20 characters
2	**PB1071** Card for command and adjustment
3	Terminal Board M1 for the connection of input analog signals
4	Terminal Board M2 for the connection of output 0-10 V analog signals
5	**Connector Serial Line TTL to connect external service devices**
6	Terminal Board M3 to connect the signals of the serial lines RS-485ModBus (RTU), COM0 for the Supervision system and COM1 for EC fans
7	**Terminal Board M4 for connection of the ON/OFF inputs (auxiliary contacts)**
8	Terminal Board **M5** for the connection of relays **RL1 & RL2 & RL3**
9	**RL1** Alarm Relays and Auxiliary relays **RL2 & RL3**
10	Keys **UP(+) / DOWN(-) / ESCAPE / ENTER (plug Pb-1071/A)**
11	Connector to link the control card to the input card
12	Terminal Board for power supply conection **24 V~** version
13	LED signalling relay on **RL1 & RL2 & RL3**
14	LED to monitor activity (RX/TX) on serial lines 0,1,2,3
15	Prearranged Dip-Switches
16	Terminal Board for power supply conection **230-400 V~** version
17	LED for state, alarm, monitoring and auxiliary inputs (7)
18	RESET manual key

1.3.2 IP55 RUNNING IN CABINET

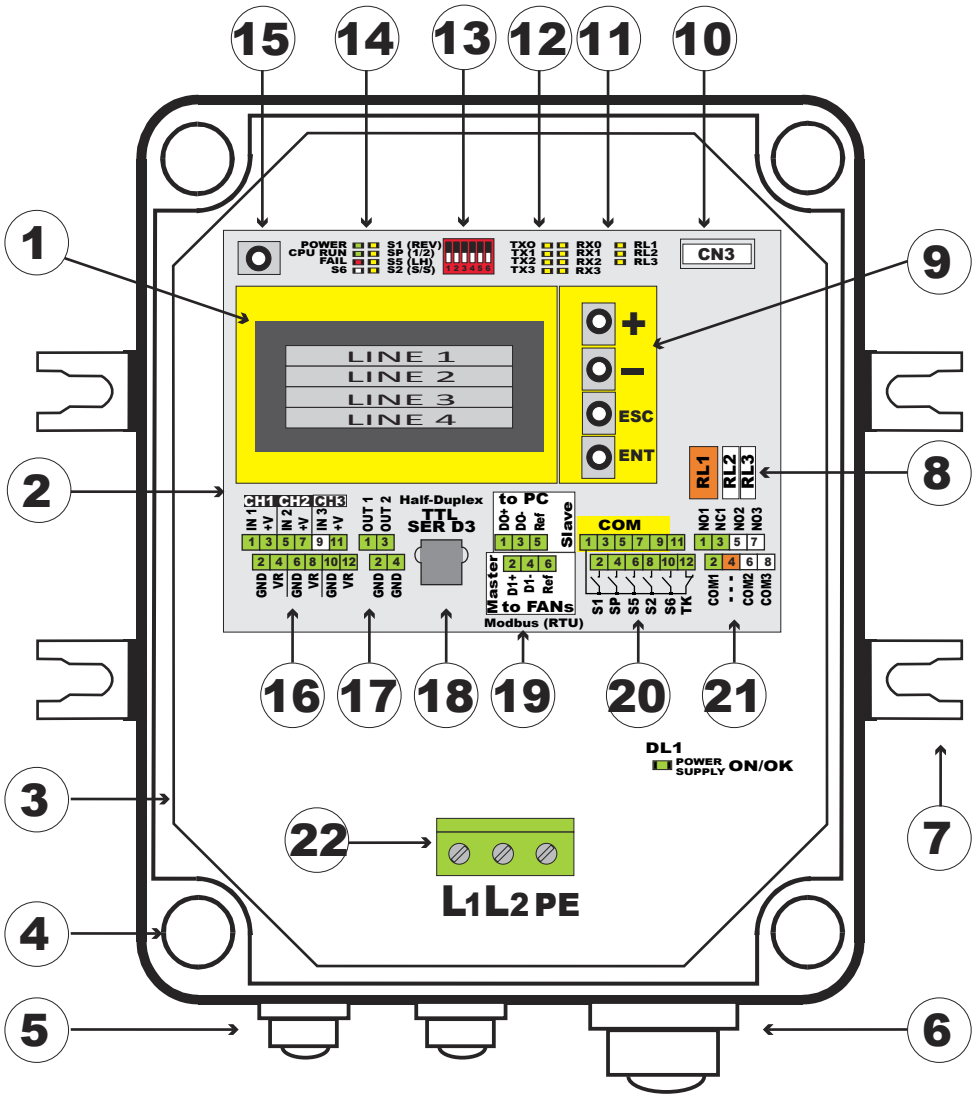

1	LCD backlit display, 4 alphanumeric lines with 20 characters
2	Card for command and adjustment
3	Input card with single phase input (three phase upon request)
4	Holes for lock screws which can be lead sealed to close the lid
5	3x cable glands M/16 and 1x cable gland M/20 to clamp cables with Ø from 10mm to 17 mm
6	1x cable gland M/32 multi -hole with 8 holes diameter 5.0 mm
7	External support brackets for wall mount
8	RL1 Alarm Relays and Auxiliary relays RL2 & RL3
9	Keys UP(+) / DOWN(-) / ESCAPE / ENTER (plug Pb -1071/A)
10	Connector to link the control card to the input card
11	LED signalling relay on RL1 & RL2 & RL3
12	LED to monitor activity (RX/TX) on serial lines 0,1,2,3
13	Prearranged Dip -Switches
14	LED for state, alarm, monitoring and auxiliary inputs (20)
15	RESET manual key
16	Terminal Board M1 for the connection of input analog signals
17	Terminal Board M2 for the connection of output 0 -10 V analog signals
18	Connector Serial Line TTL to connect external service devices
19	Terminal Board M3 to connect the signals of the serial lines RS-485 ModBus (RTU), COM0 for the Supervision system and COM1 for EC fans
20	Terminal Board M4 for connection of the ON/OFF inputs (auxiliary contacts)
21	Terminal Board M5 for the connection of relays RL1 & RL2 & RL3
22	Terminal Board for the connection of the single phase power supply ON

2.0 INSTALLATION AND ELECTRICAL CONNECTIONS

Installation should be performed state-of-the-art by a Trained Operator

2.1 Installation

Install the device in environments where temperature ranges between -20°C and +50°C, otherwise proper function and integrity of the device itself shall be compromised.

If installation should require exposure to temperatures lower than 0 °C it is advisable to avoid continued electrical connection and disconnection to the controller: constant power maintains the controller at work temperature and eliminates the problem of condensation forming inside the protection box. To arrest operation momentarily, use the S2 contact of the 'M4' (S2) = ON/OFF terminal strip. See par. 2.2.5 for more details.

Install the controller in a place possibly far from direct irradiation from sun and from rain For wall mount use the four brackets in the kit, avoiding to directly drill the bottom of the container. Once installation has ended, always check the perfect seal of the external protection lid.

Mount the equipment vertically and only use the preset holes on the bottom to insert the connection cables on the electric input terminal board side, keeping the IP55 protection degree, using the cable glands included, quality sheaths and cables of the right size.

2.2 Power supply connection

Electric voltage Mono-phase 20/24 V ~ +/- 10%
Electric voltage Mono-phase 230 V ~ to 400 V ~ +20% / - 10%
Neutral/Phase or Phase/Phase (upon request other voltage values).

Connect as shown in the drawing below. The power cables should be installed separately from the signal cables, keeping a distance of at least 100 mm. Do not mix power cables and signal cables in the same conduit, in case of crossing, provide for an installation with a 90° angle.

Before powering the unit, carefully check that grounding, power and signal are properly installed.

Where there is power supply "interference," due to the presence of other electrical power components which make it irregular (i.e.: power contactors), it is advisable to install supplementary 'SURGE ARRESTER' filters on the controller's electric input.

2.2.1DIN-rail version for Voltage from 20 to 24 V~

Electric: Single phase 20 to 24 V ~ ± 10%); upon request other voltage values. Connect as shown in the drawing below.

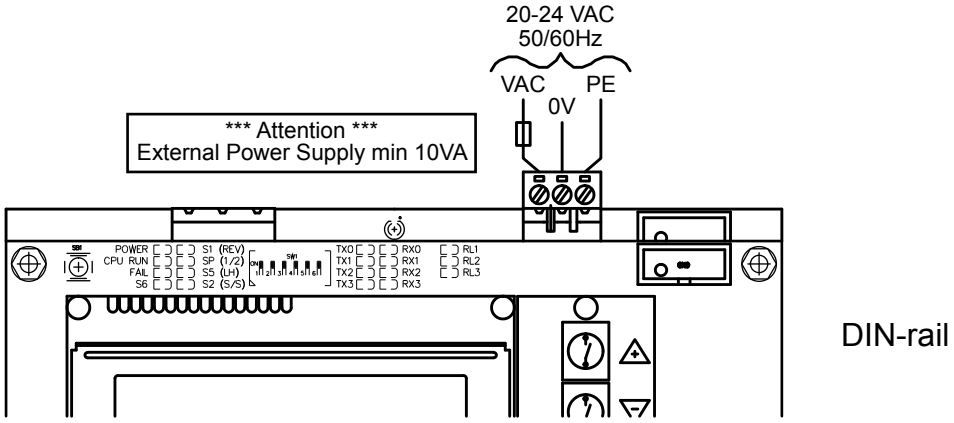

2.2.2 Versions for Voltage 230 V~ o 400 V~ (-10% / +20%)

Electric voltage Single phase 230 V ~ to 400 V ~ -10% / +20% (upon request other voltage values).
The power cables should be installed separately from the signal cables, keeping a distance of at least 100 mm. Do not mix power cables and signal cables in the same conduit, in case of crossing, provide for an installation with a 90° angle. Where there is power supply "interference," due to the presence of other electrical power components which make it irregular (i.e.: power contactors), it is advisable to install supplementary 'SURGE ARRESTER' filters on the controller's electric input.

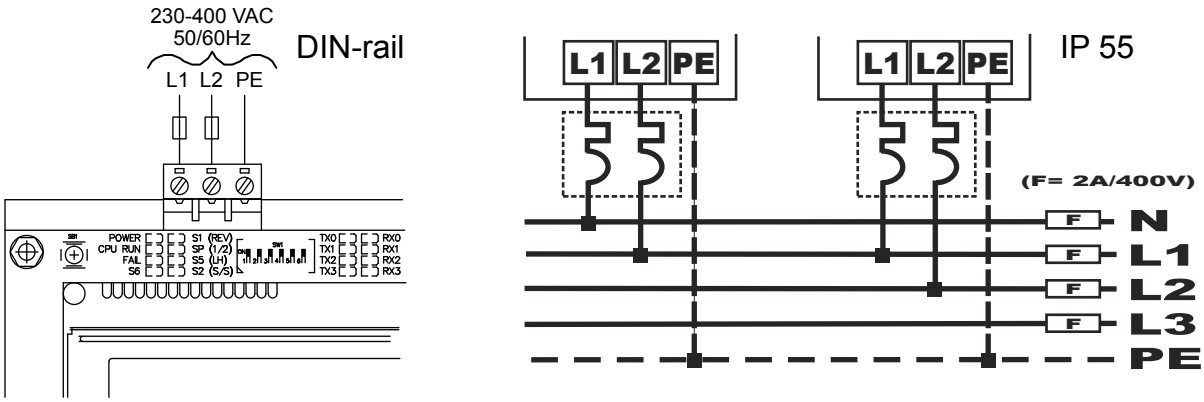

2.3 Connection of Sensors and Command Signals

The ECM controller has been set up for direct connection of sensors/signals and auxiliary contacts to support adjustment.
The picture below represents the detailed outline of the connection terminal boards on the card: M1 -M2 -M3 -M4 -M5.
Connector CN1 is not used in the version for EC fans.

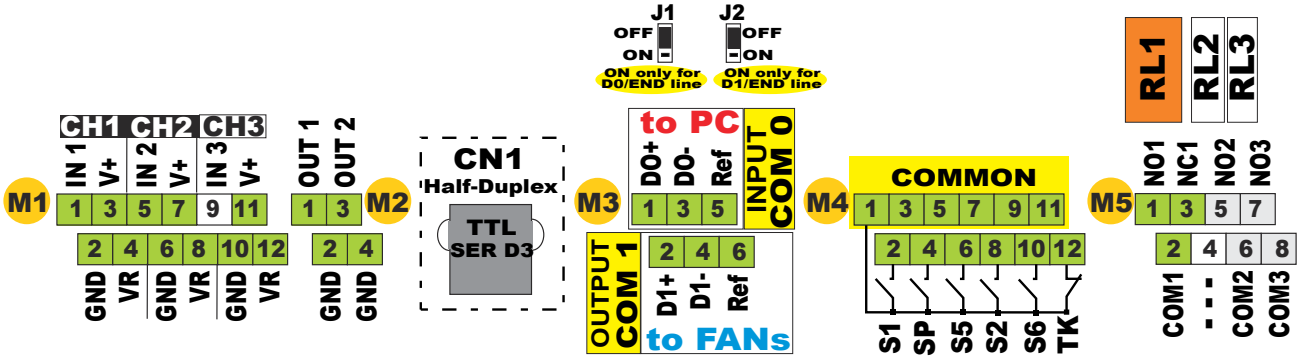

2.3.1 TERMINAL BOARD M1: Analog Transducers

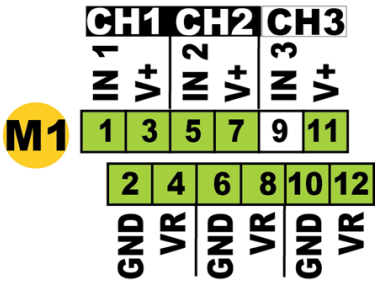

Terminal board M1		Description
IN1	1	Input for analog transducer Channel 1 (CH1)
GND	2	Reference Mass
+V	3	Output +22V/40mA not stabilized for transducer power, protected by short circuit
Vr	4	Power output from 5.0 V / 10.0 V MAX 10 mA, stabilized and protected from short circuit (automatic switching based on configuration)
IN2	5	Input for analog transducer Channel 2 (CH2)
GND	6	Reference Mass
+V	7	Output +22V/40mA not stabilized for transducer power, protected by short circuit
Vr	8	Power output from +5.0 V / +10.0 V / 10 mA, stabilized and protected from short circuit (automatic switching based on configuration)
IN3	9	Inlet for optional analog transducer, read only Channel 3 (CH3) or Bk1/Bk2 swicht
GND	10	Reference Mass
+V	11	Output +22V/40mA not stabilized for transducer power, protected by short circuit
Vr	12	Power output from +5.0 V / +10.0 V / 10 mA, stabilized and protected from short circuit (automatic switching based on configuration)

MASTER Mode rPr

(for scale 4 -20 mA, 0/15, 0/25, 0/30, 0/45 bar)

CODE	RANGE
rPr420	4-20mA
rPr015	0-15bar
rPr025	0-25bar
rPr030	0-30bar
rPr045	0-45bar

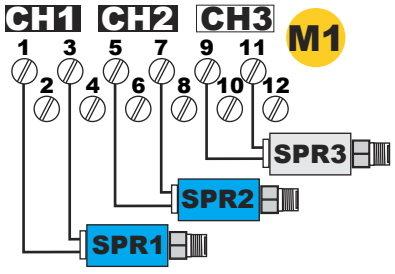

MASTER Mode rUu

(for scale 0 -5 Vdc, 0/30 bar)

CODE	RANGE
rUu05	0-5Vdc
rPu030	0-30bar

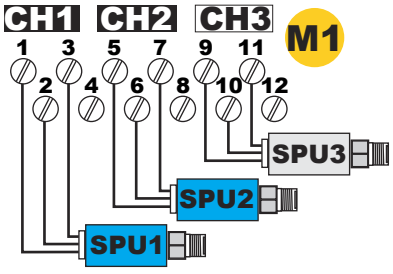

MASTER Mode rPu
(for scale 0 - 10 Vdc)

CODE	RANGE
rPu010	0-10Vdc

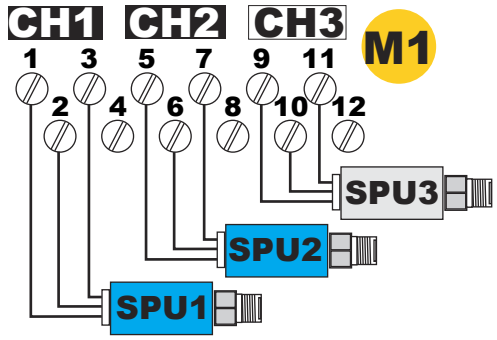

MASTER Mode rtE (* default)
(for scale -20 ..+90 °C)

CODE	RANGE
rtE-01	-20/90°C
rtE-02	10/90°C

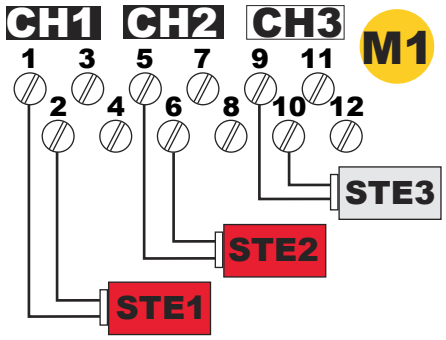

MASTER Mode, switching Bk1 / BK2 through NTC temperature probe
Scheme available for all modes

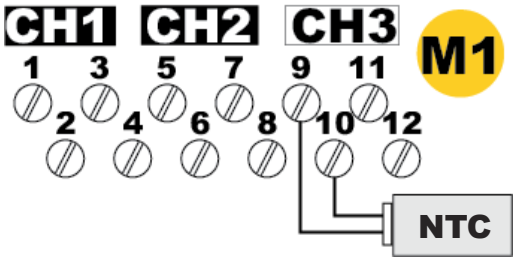

SLAVE Mode rS 010
(for scale 0 -10 V, signal from other controller)

CODE	RANGE
rS010	0-10Vdc

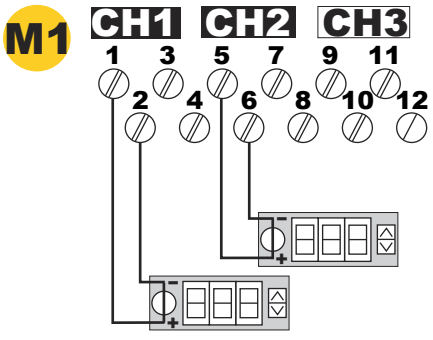

SLAVE Mode rS 010
(for scale 0 -10 V, signal from potentiometer)

CODE	RANGE
rS010	0-10Vdc

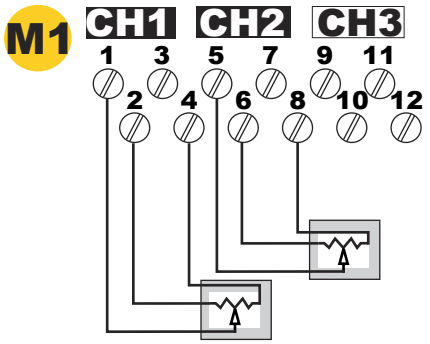

SLAVE Mode rS 020
(for scale 0 -20 mA , for mass signal return)

CODE	RANGE
rS420	4-20mA

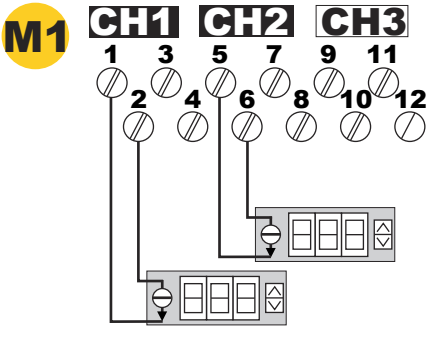

SLAVE Mode rS 020
(for scale 0 -20 mA , signal drawn from +24 V)

CODE	RANGE
rS420	4-20mA

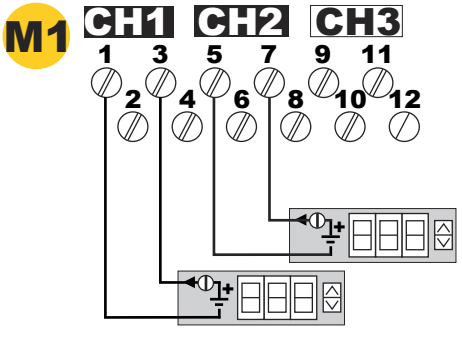

2.3.2 TERMINAL BOARD M2: Outputs 0-10V, Analog Peripherals.

The M2 Terminal Board is used for the two 0 -10 V analog outputs, dedicated to command peripherals or analog actuators, suited to receive 0-10 V voltage signals.

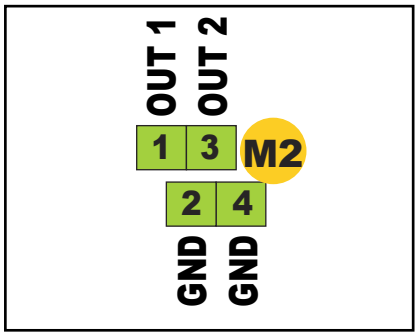

TERMINAL BOARD M2		Description
1	OUT -1	Output OUT -1 configured (*) per command :
		- EC Motor, 0 -10 V (max 20 mA)
		- Unit SLAVE 0 -10 V (max 20 mA)
2	GND	Reference Mass
3	OUT -2	Output OUT -2 configured (*) for Spray Command, 1 -10V (MAX 20 mA)
4	GND	Reference Mass

(*) N.B. The configuration of the illustrated 0 -10 V analog outputs is the default one; it can be changed, for further details see par. 6.4.3

The pictures here below illustrate the connection diagrams between:
The OUT - 1 command output 0-10Vdc programmable for EC fans and SLAVE Power units
The OUT - 2 command output for ADIBATIC Air-Fresh & AWS Spray (UR%) system
Connection slave units: Terminal Board M2 (terminals 1/2)
The picture below illustrates the connection of several slave units with input 0 -10 V, for specifications see par.1.2.

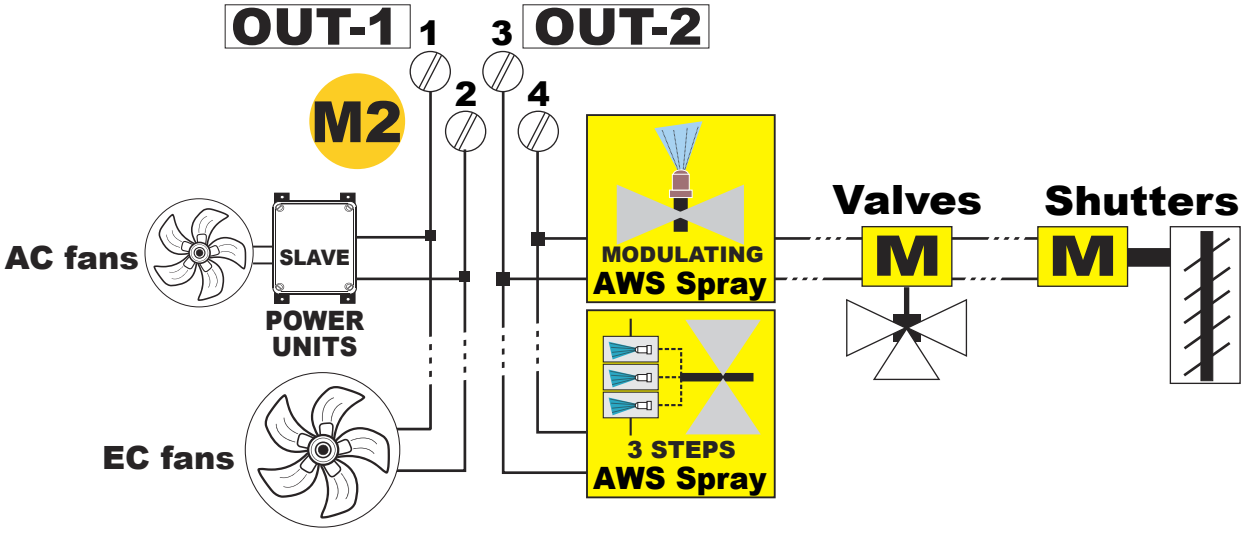

Connection sprays unit AWS .... : Terminal Board M2 (terminals 3/4) & M4 (terminals 9,10) (*)
The figure below depicts the connection with the Air-Fresh & AWS unit ... (**)

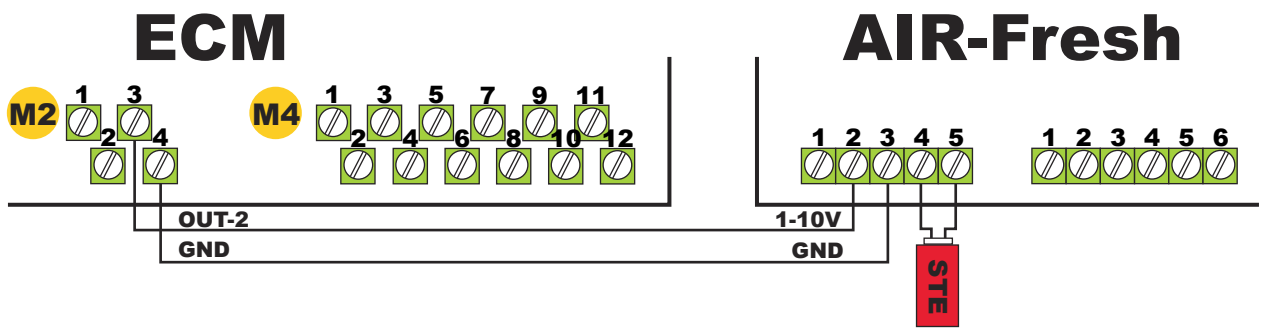

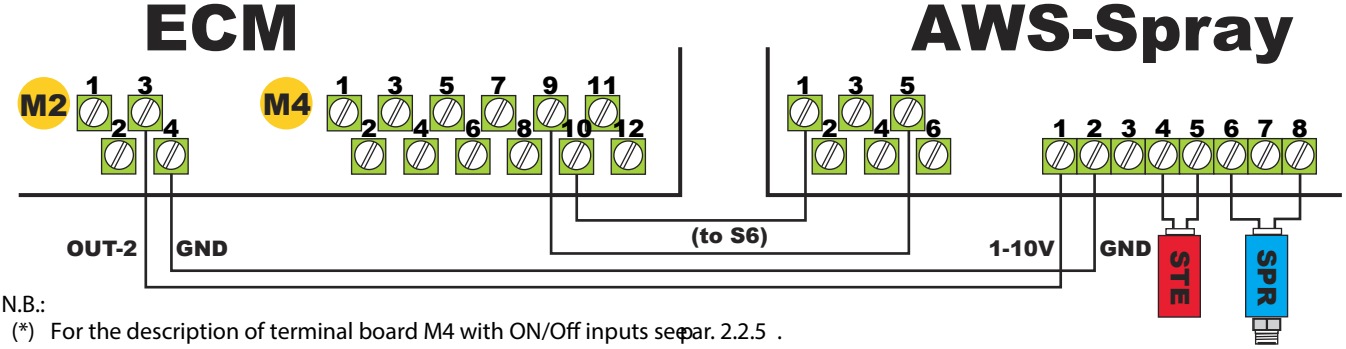

N.B.:
(*) For the description of terminal board M4 with ON/Off inputs see par. 2.2.5 .
(**) The command OPEN electro valves is set to contact C6 of the controller to start up the AWS - Spray system

2.3.3 TERMINAL BOARD M3: Connections for two Isolated Serial Lines RS-485

Terminal board M3 is used for electrical connections of the two isolated serial lines RS485, called "COM0" and "COM1", both managed by the "ModBus RTU protocol with these functions:
COM0 : to be connected to "PC Host", managed by the ModBus RTU protocol in "SLAVE" mode as illustrated in the aforesaid documents in par. 1.1 .
COM1 : to be connected to one or more " EC ebm -papst fans " managed with ModBus RTU protocol in "MASTER" mode as illustrated in documents mentioned in par. 1.1

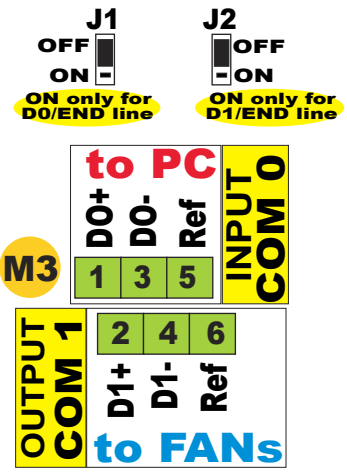

Terminal Board M3		Description	
1	DO+	In/Out Straight COM 0	COM 0
3	DO+	In/Out DeniedCOM 0	Input
5	REF0	Reference Mass COM _0 (isolated from REF0)	SLAVE
2	DO+	In/Out Striaght COM 1	COM 0
4	DO+	In/Out Denied COM 1	Output
6	REF1	Reference Mass COM _1 (isolated from REF0)	SLAVE

Serial COM 0

J1	Pos.	Ending 120 ohm
	2-3	Excluded
	1-2	Inserted

Serial COM 1

J2	Pos.	Ending 120 ohm
	2-3	Excluded
	1-2	Inserted

N.B. To guarantee the right functioning even in an electrically disturbed environment, the two serials RS-485 COM0 and COM1 are isolated between each other and the rest of the PB1071/2 board components.
So that functioning is not hindered, do not connect the screens of the two serial lines between each other and with the board mass and strictly follow the instructions here below.
For the data line, use a suitable cable, i.e.: ITC BELDEN 15S7D Serial Cable for LAN Networks

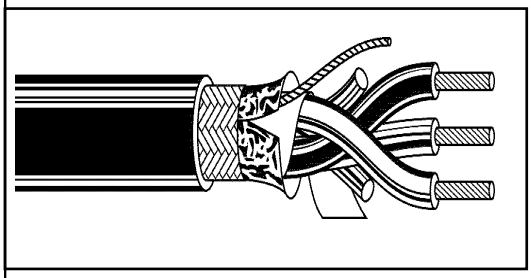

Construction and electrical specifications

Conductor 1	CuSn 7 x 0,25 mm
Conductor 1 (Resistance)	50 Ohm/Km
Conductor 2	CuSn 7 x 0,25 mm
Conductor 2 (Resistance)	50 Ohm/Km
Conductor 2 (Resistance)	blanco/orancio/blu
Isolation	PEE 2,35 mm
Foil 1	AL/Pet 100%
Braid1	CuSn 7 65%
Internal Jacket	PVC flame retardant oil resistant Gray
Internal Jacket (diameter)	7,6 ± 0.1
Internal Jacket	PVC flame retardant oil resistant Gray
Internal Jacket (diameter)	9,0 ± 0,1
Impedence	120 ± 15 OHM
Mutual/Coax Capacity	MUTUA 36 pF/m
Velocity Ratio	78 %
Screening Efficiency (100 -900 mHz)	>85 dB
Conductior	CuSn 7 x 0,20 mm
Nominal Voltage	300 V
Working Temperature	-20 / +80 °C
Jacket Insulation	C-4 (U0 = 400 V)
Test Voltage	4,5 KV ac
Minimum Curvature Range (internal/external)	40/90 mm
Weight	8,4 kg/100 m

NOTE: ideal for external use, buried, and in damp areas

Terminal Board M3, terminals 1,3,5 for Serial RS-485 "COM0" : dedicated to the connection with master unit (PC-Host)
Connect the cable (twisted and shielded + ground conductor) of the data line (ModBus network) to terminals : 1 = D0+ / 3 = D0-

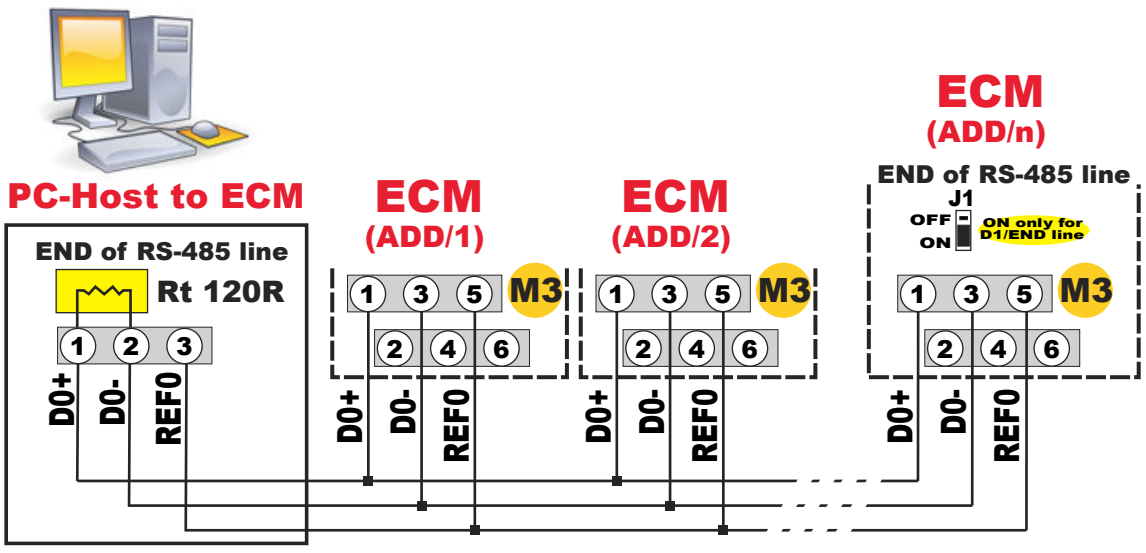

N.B. It is absolutely essential to make sure that the RS-485 line is correctly connected, i.e. that all the " D0+" terminals of the network must be connected all together to the same cable; this is true also for " D0 " and " REF0 ".
The shielding of the cable must be earthed and to REF0 only from the " PC< - >RS485 " side, keeping it isolated from REF1.

- The data line cable (ModBus network) must be laid from one device to the next, starting from the master unit and finishing with the final served device: no other method of cabling is permitted.
- Connections have to be made with suitable cable; do not exceed the maximum length of 1000 metres.
- Make sure there is sufficient distance between the ModBus network cable and the other cables of the unit, especially the mains power line. The ends of the line (Master and final device served) must end with 120 ohm resistance: run the 120 ohm end on the RS - 485< >PC HOST adapter; on the last unit of the line position J1 on 2 -1; on all other units position J1 on 2 - 3
- Ground the cable linking all " REF0" terminals only next to the Master station so that all stations are at the same potential, that of the PC Host.
- Ground the shielding of the cable departing from the RS -485<> PC Host adaptor only next to the adaptor itself. (The shielding must only be connected to the PC Host side, as in the diagram).
- The cable must be divided into segments, one for each section; connect the shielding of the first section only from the RS 485 < -> PC Host adaptor side and connect the screen of the second section only on the Slave N° 1 side and so on.
- Do not connect the shielding of two successive sections together (arriving and departing) and do not connect them to Ground.
- REF0 must not be connected to terminal 6 of M3.

Terminal Board M3, terminals 2,4,6 for Serial RS-485 "COM1" : dedicated to connection between unit ECM and EC ebm-papst fans.
Connect the cable (twisted and shielded + ground conductor) of the data line (ModBus network) to terminals
2 = "D1+ ," 4 = " D1- " 6 = "REF1" of the ECM and to one or more EC ebm -papst fans, following this diagram:

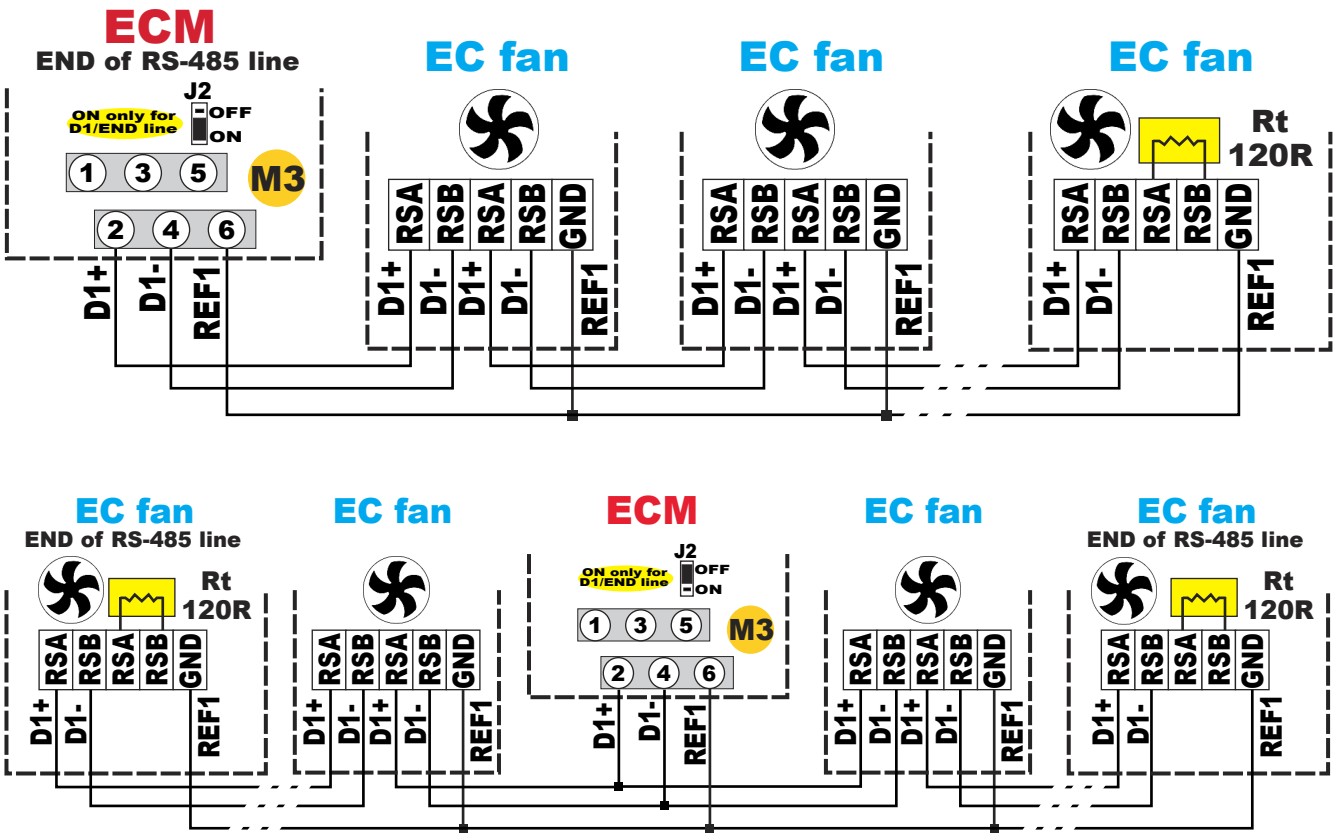

N.B. It is absolutely essential to make sure that the connections are correct i.e. all the "D1+" terminals of the network must be connected all together to the same cable: this is true also for " D1- " and " REF1 ".
The shielding of the cable must be connected only from the " ECM" side to earth and to REF1 , keeping it isolated from REF0

- The ModBus network cable must be laid from one device to the next, starting from the master unit and finishing with the final served device: no other method of cabling is permitted.
- Connections have to be made with suitable cable; do not exceed the maximum length of 1000 metres.
- Make sure there is sufficient distance between the ModBus network cable and the other cables of the unit, especially the mains power line.
- The ends of the line (Master and final device served) must end with 120 ohm resistance (Rt) : run the 120 ohm end on the ECM , positioning J2 on 2 - 1, on the last EC fan of the data line fit a resistance of 120 ohm 1 / 2 W (see diagram).
- Ground the cable linking all "REF1 " terminals only next to the ECM so that all stations are at the same potential, that of the ECM
- Ground the shielding of the cable departing from the ECM only next to the ECM itself. (The shielding must only be connected on the ECM side, as in the diagram).
- The cable must be divided into segments, one for each section; connect the shielding of the first section only from the ECM side and connect the screen of the second section only on the Slave N° 1 side (EC fan) and so on.
- Do not connect the shielding of two successive sections together (arriving and departing) and do not connect them to ground.
- REF1 must not be connected to terminal 5 of M3.

2.3.4 TERMINAL BOARD M4: ON-OFF logic Inputs

Terminal Board M4			Description		
N°	Initials	Interr.			
1	+24 Vdc isolated		Power voltage		
2	D/R	S1	DIR Mode REV Mode	S1=Off	Direct Adjustment
				S1=On	Inverse Adjustment
3	+24 Vdc isolated		Power voltage		
4	1/2	SP	Selection Parameters Bench	SP=Off	Set -Point 1
				SP=On	Set -Point 2
5	+24 Vdc isolated		Power voltage		
6	AUX	S5	Limit RPM% Night	S5=Off	Limit Excluded
				S5=On	Limit Enabled
7	+24 Vdc isolated		Power voltage		
8	S/S	S2	Start Consensus Stop Consensus	S2=Off	- RUN
				S2=On	- OFF
9	+24 Vdc isolated		Power voltage		
10	Spray	S6	Limit RPM% with Spray running	S6=Off	Limit Excluded
				S6=On	Limit Enabled
11	+24 Vdc isolated		Power voltage		
12	TK	TK	General Alarm Can be selected	TK=On	No Alarm
				TK=Off	General Alarm via MODBUS

Auxiliary Contacts

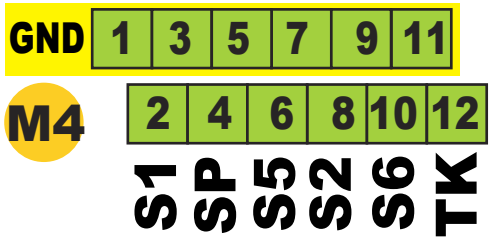

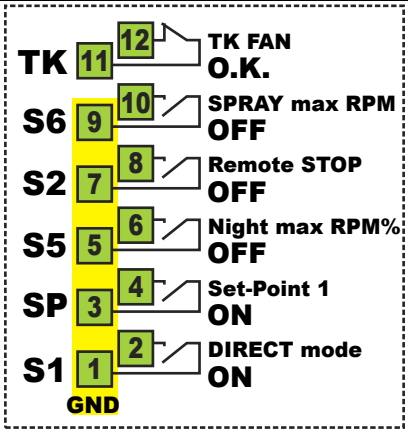

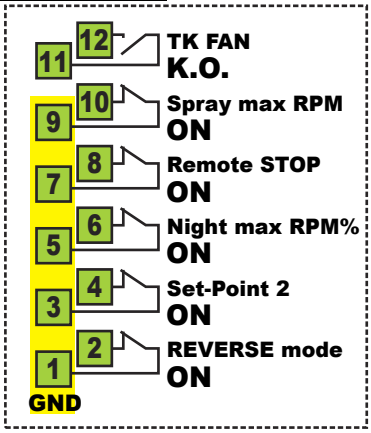

2.3.5 TERMINAL BOARD M5: connection of relay RL1, RL2, RL3

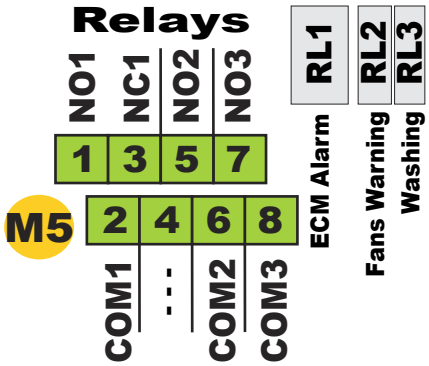

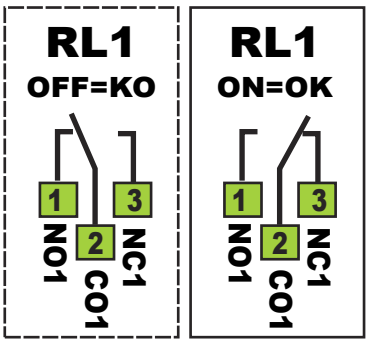

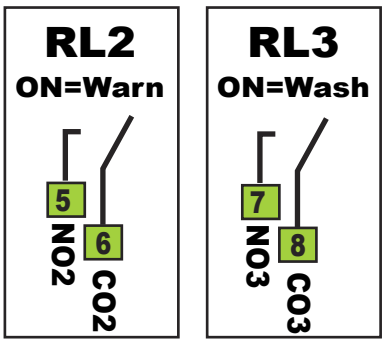

Use of relays RL1 for Adiabatic Command

Select : C6 = 3
for ON-OFF Spray System

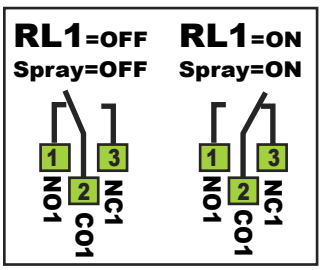

Terminal Board M5		Description
1	RL1 NO1	Relay RL1 contact NO
2	RL1 CO1	Relay RL1 contact in common
3	RL1 NC1	Relay RL1 contact NC
4	- - - - -	Not enabled
5	RL2 NO2	Relay RL2 contact NO
6	RL2 CO2	Relay RL2 contact in common
7	RL3 NO3	Relay RL3 contact NO
8	RL3 CO3	Relay RL3 contact in common

Use of relays

RL1 Contact NO 5 Amp 250 Vac, 30 Vdc/ NC 3 Amp 250 Vac, 30 Vdc Normally, open in the presence of alarm.
See chapter 8 for more details about RL1 : Alarm mode or Spray mode.

RL2 Contact NO 5 Amp 250 Vac, 30 Vdc. Normally, open in warning situations (WARNING). See chapter 8 for more details.

RL3 Contact NO 5 Amp 250 Vac, 30 Vdc. Controls the electro valve for washing the exchanger. See par. 4.7 for more details.

3.0 DISPLAY AND COMMAND PARTS

3.1 Display and Push-buttons

The device has a backlit LCD display with 4 lines, 20 characters per line and four keys per function: "UP", "DOWN", "ESCAPE","ENTER". The latter are used to display and set parameters.

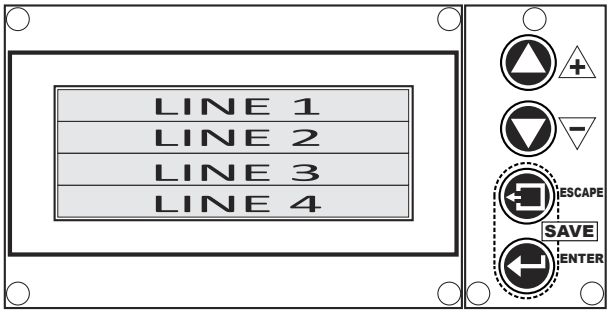

Once switched on the screen will display the following for three seconds:

1	ECM - rel. X.Y	Model of Device - Release Software X.Y
2	EC Fans & Spray	
3	Manager & Controller	Type of firmware installed
4	PID & MODBUS inside	

And after a few seconds, if the device is configured to manage the fans through the analog output 0-10V OUT_1, the following start page is displayed:

1	---- Run ---- HH . MM	State of System: no working alarm (*), RTC Hours and Minutes
2	Ou1 0.0V Ou2 1.0V	Analog Output OUT_1 = 0.0 V Analog output OUT_2 = 1.0 V
3	IN1 37,5 SP1 45,0 C	Main Input: IN1 = 37.5 °C Set Point selected SP1 = 45.0 °C
4	rtE -01	Func. specifications : MASTER rtE -01

If the device has been configured to manage the fans EC Motor ebm-papst through serial COM_1 but the device is being installed for the first time, meaning the map for the EC fans available has not yet been loaded, the following is displayed:

1	Alarm: no Fans -	"Attention there are no Fans" (alarm message first part) (*)
2	The Map is cleared	"The map is cleared" (alarm message second part) (*)
3	IN1 37,5 SP1 45,0 C	Main Input : IN1 = 37.5 °C Set Point selected SP1 = 45.0 °C
4	rtE -01 Map.0 Run.0	Used configuration : rtE-01, EC fans : 0 mapped and 0 present

If the EC fans map is already set and at the map addresses there are EC fans actually input, meaning that they dialogue in serial line and the speed command of the fans is higher than zero, the following is displayed:

1	---- Run ---- HH . MM	State of System: no working alarm (*) , RTC Hours and Minutes
2	700Rpm 3000W total	Speed of motors 700 (RPM) , Total power absorbed 3000 (W)
3	IN1 37,5 SP1 45,0 C	Input value 1 37.5°C and Set Point-1 45.0°C
4	rtE -01 Map.6 Run.6	Default configuration used rtE -01 , EC fans : 6 mapped and 6 functions

(*) If there is a function problem or an alarm, the following message will appear in the first line of the display, for further details see Chap. 8.
As above, but with the value of speed command of fans void, the message will change from: "Run" to " Ready ":

1	-- Ready HH . MM	State of System: no alarm ready, RTC Hours and Minutes
2	0Rpm 0W total	Speed of motors 0 (RPM), Total power absorbed 0 (W)
3	IN1 25,5 SP1 45,0 C	Input value 1 25.5 °C and Set Point-1 45.0 °C
4	rtE -01 Map.6 Run.6	Default configuration used rtE-01, EC fans: 6 mapped and 6 functions

If the S2 contact (Stop/Start) is closed (see par. 2.2.4) the display page as above, becomes:

1	---- Stop -- HH . MM	State of System: no alarm in stop, RTC Hours and Minutes
2	0 Rpm 0 W total	Speed of motors 0 (RPM), Total power absorbed 0 (W)
3	IN1 37,5 SP1 45,0 C	Input value 1 37.5 °C and Set Point 1 45.0 °C
4	rtE -01 Map.6 Run.6	Default configuration used rtE -01, EC fans: 6 mapped and 6 functions.

If you try to access a function which is not enabled the message "Function not Allowed" will appear on line 3; for example when trying to enter the PID parameter set menu when the command selected is not of the PID type, the following is displayed :

1	-- Expert Mode Menu --	State of System: change parameters Expert level
2	5: PID Parameters	Parameters PID Controller (**)
3	Function not Allowed	Function not enabled: impossible to set
4	ENT: select ESC: exit	Programming suggestions

3.2 Adjusting display contrast

To adjust contrast of the LCD display press the first key " ENTER " and then the key " UP (+)" to increase or " DOWN (-)" to decrease; only line N°3 is changed on the display, informing user of the current "dimmer" level.



1	---- XXXX ----	State of System
2		
3	LCD DIMMER 235	Value of current dimmer : from 0 to 255
4		

The value of the dimmer changes the value of the contrast value on the LCD display by 5 unit steps from 0 to 255 in a circular way; for values higher than 190 the contrast is extremely low, these values should be avoided not to compromise reading.

3.3 Prearranged Dip -Switch: SW1

The device has N. 6 miniature Dip -Switches to run functions or special user modes already prearranged in the basic software or these can be customized upon request.

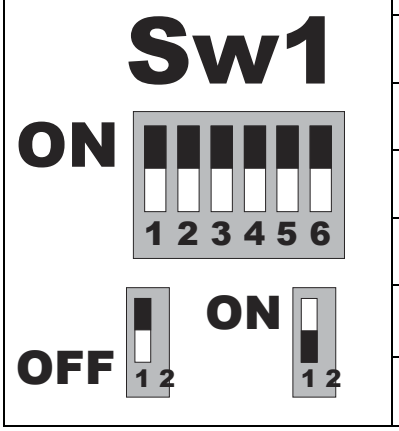

SW1		Description
1	ON	EXPERT level ACCES
	OFF	BASIC level ACCES
2	ON	DEAD band ACTIVE (+/-2,5% of Pb)
	OFF	DEAD band EXCLUDED
3	ON	Enables the Alarm + Stop with TK=Off
	OFF	Disables the Alarm + Stop with TK=Off
4	ON	Stable MODBUS straining (scheduler mode)
	OFF	Temporary MODBUS straining (20 sec)
5(*)	ON	Only 0-10V COMMAND (MODBUS disabled)
	OFF	MODBUS command ACTIVE (ebm as Std.)
6	ON	ZIEHL-ABEGG MODBUS ACTIVE
	OFF	EBM-PAPST MODBUS ACTIVE

(*) Enabling MODBUS command is only allowed by software rel. 1.1

Dip-Switch selection for EC fans regulation

MODBUS (RTU) Protocol

(Ebm-papst)



Sw1-5 = OFF
Sw1-6 = OFF

(Ziehl-abegg)



Sw1-5 = OFF
Sw1-6 = ON

Remote Vdc Signal

(0-10Vdc)



Sw1-5 = ON
Sw1-6 = OFF

3.4 WARNING Led

On the command and adjustment board there are signal LEDs which, when switched on, enable the functions illustrated in the table below:

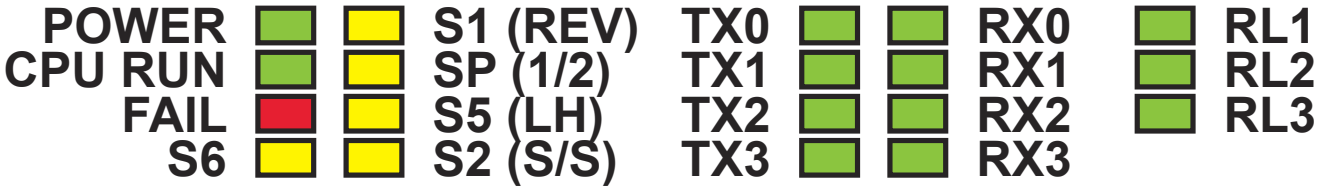

DL15	Power	green	ON = Electric input O.K.
			OFF = Electric input OFF
DL10	CPU Run	green	ON with intermittent flashing 1 Hz = Microcontroller regularly working
			OFF / ON /irregular flashing = Microcontroller not working
DL5	Fail	red	ON = FAIL: presence of one or more alarms, message on the display, see Chap .8
			OFF = all O.K.
DL1	S6	yellow	ON = speed limit fans RPM% with SPRAY running
			OFF = no speed limit fans
DL16	S1	yellow	ON = function REVERSE running
			OFF = function DIRECT running
DL11	SP	yellow	ON = adjustments with parameters of Set -Point 2
			OFF = adjustment with parameters of Set -Point 1
DL6	S5	yellow	ON = speed limit fans RPM% night RUNNING
			OFF = no speed limit fans
DL2	S2	yellow	ON = Run allowed
			OFF = Forces the device in “Stand -By,” speed of the fans void
DL17	Tx0	green	ON = Transmission output data on serial “0”
			OFF = No activity on serial “0”
DL12	Tx1	green	ON = Transmission output data on serial “1”
			OFF = No activity on serial “1”
DL7	Tx2	green	ON = Transmission output data on serial “2”
			OFF = No activity on serial “2”
DL3	Tx3	green	ON = Transmission output data on serial “3”
			OFF = No activity on serial “3”
DL18	RX0	green	ON = Reception of input data on serial “0”
			OFF = No activity on serial “0”
DL13	RX1	green	ON = Reception of input data on serial “1”
			OFF = No activity on serial “1”
DL8	RX2	green	ON = Reception of input data on serial “2”
			OFF = No activity on serial “2”
DL4	RX3	green	ON = Reception of input data on serial “3”
			OFF = No activity on serial “3”
DL19	RL1	green	ON = Relay RL1 ON
			OFF = Relay RL1 OFF
DL14	RL2	green	ON = Relay RL2 ON
			OFF = Relay RL2 OFF
DL9	RL3	green	ON = Relay RL3 ON
			OFF = Relay RL3 OFF

4.0 DESCRIPTION OF RUNNING PROCEDURES

The adjustment unit ECM commands the 0-10V fans with analog signal through output OUT -1 or through serial RS-485 COM1, processing the signal received from inputs IN1 and/or IN2 by one of the following procedures defined by the chosen configuration. For further details see par. 6.2, 6.3 and 6.4.

4.1. SLAVE : ADJUSTER SLAVED BY EXTERNAL SYSTEM

The speed command of fans changes depending on the input signal received. The command can be:
DIRECT: output increases as input increases (factory default)
INVERSE: output decreases as input increases.

DIRECT Mode,

(factory default)

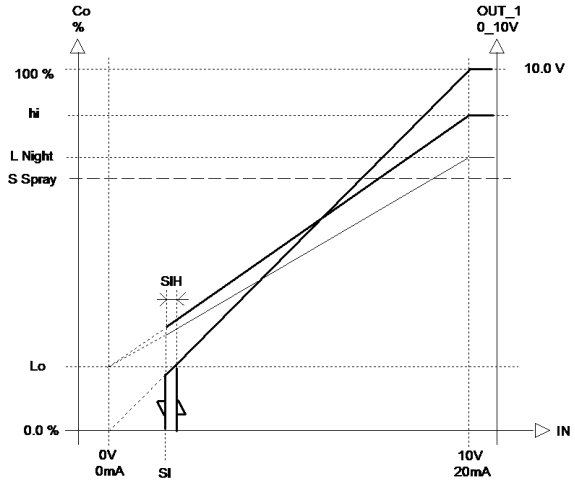

Out 1	Value of the output command Out 1 for EC fans
Co	Speed command transmitted to EC fans (in % of MAX speed)
IN	Value of the input signal
LNight	Limit of Maximum Night speed (RPM)
S Spray	Constant speed command (RPM) with Spray enabled (Forced)
hi	Limit of Maximum Speed (MAX RPM)
Lo	Limit of Minimum Speed (Min RPM)
SI	Bypass limit of Maximum Speed (Cut-Off)
SIH	Hysteresis on the SL value

• Either enabling the DIRECT or INVERSE mode depends on the state of input S1, see par. 2.2.5
• speed limit LNight (can be enabled through S5, see par. 2.2.5) takes priority over hi maximum speed limit only if of lower value.

• • the value of the fixed speed command SSpray (can be enabled through S&) always takes priority over hi maximum speed limit. If enabled together with speed limit LNight, the lower value has priority.
• If SI = 0 Cut-Off mode does not function
• • The dynamic imposed for the speed command (Co%), consisting of Lo, LNight and hi, always corresponds to the dynamic of (0-10 V or 4 -20 mA) of the input signal.

INVERSE mode

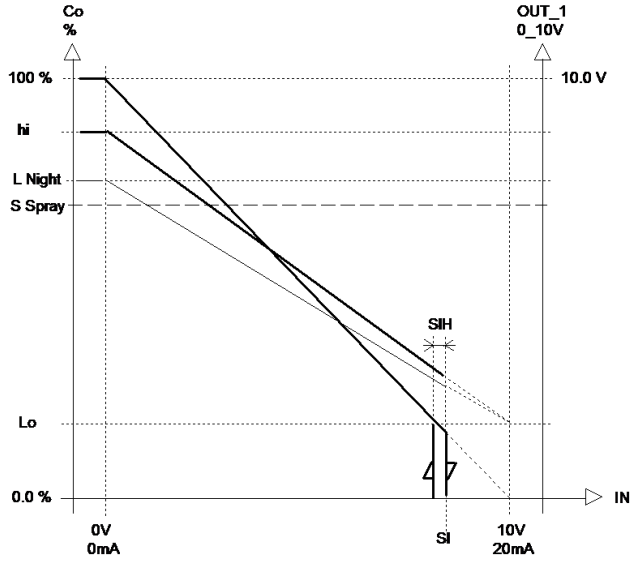

NB. If S1 = 0 , the function of Cut-Off does not come in to operation; if SI >0, the Cut-off function operates so be careful to set a suitable value for the desired function.

At the same time analog output Out 2 generates a 1-10V signal for the spray unit which varies in proportion to the input signal, considering the USP and UPB current values. The signal never drops to zero but always ranges between 1 and 10V.

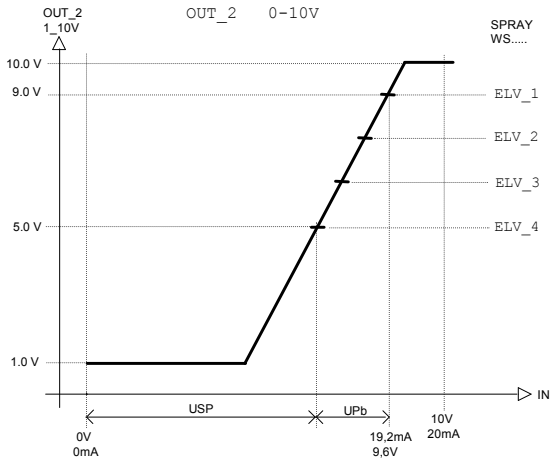

Out 1	Value of the output command OUT-2 per Spray unit WS… AWS ...
IN	Value of the input signal
USP	Set Point per Spray unit (output OUT-2)
UPb	Proportional band per Spray unit (output OUT-2)
ELV_1.....ELV_4	Electro valves ON/OFF spray unit WS… AWS ...

N.B. For further details on this functional feature, when the control unit is connected to a ECM AWM (Air-Water-Manager = ECM + AWS) , see chap. 5 of the AWS manual.

4.2 Master "P": Proportional Controller

The speed command for fans changes in order to keep the measured magnitude of the transducer with ruling signal, within the (Pb) differential, higher (factory default) or lower in value, between the two connected at the inputs.
Action can be either:
DIRECT: output increases as input increases (factory default)
INVERSE: output decreases as input increases.
The Set - Point can be at the minimum or maximum value of the fans speed command, the following diagrams illustrate the action of the P controller in the four function modes available.

Mode DIRECT
SP at MAX

(factory default)

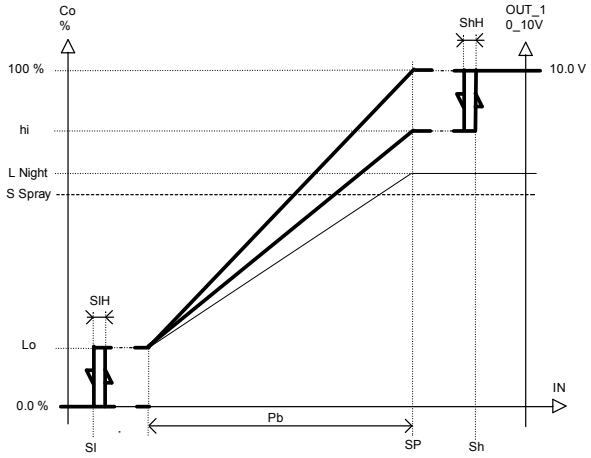

Out 1	Value of the output command Out 1 for EC fans
Co	Speed command transmitted to EC fans (in % of MAX speed)
IN	Value of the input signal ruling
SP	Set point value
LNight	Limit of Maximum Night speed (RPM)
SSpray	Constant speed command (RPM) with Spray enabled (Forced)
Pb	Proportional band
hi	Limit of Maximum Speed (MAX RPM)
Lo	Limit of Minimum Speed (Min RPM)
Sh	Bypass limit of Maximum Speed
ShH	Hysteresis on the Sh value
SI	Bypass limit of Maximum Speed (Cut-Off)
SIH	Hysteresis on the SI value

- Either enabling the DIRECT or INVERSE mode depends on the state of input S1, see par. 2.2.5
- The Set Point (SP) position at the minimum or maximum depends on the value of the C4 parameter, see par. 6.4.3
- night limits LNight (can be enabled through S5, see par. 2.2.5) takes priority over hi maximum speed limit only if of lower value.
- The value of the fixed speed command SSpray (can be enabled through S6) always takes priority over the hi maximum speed limit. If enabled together with the speed limit LNight, the lower value has priority.

INVERSE mode, SP at MAX

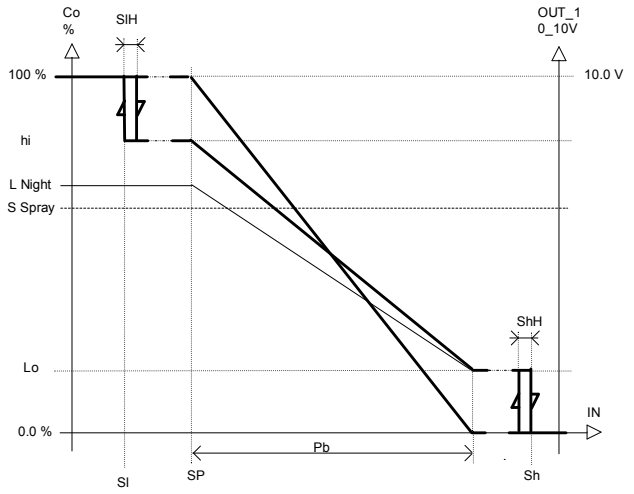

DIRECT mode, SP at min

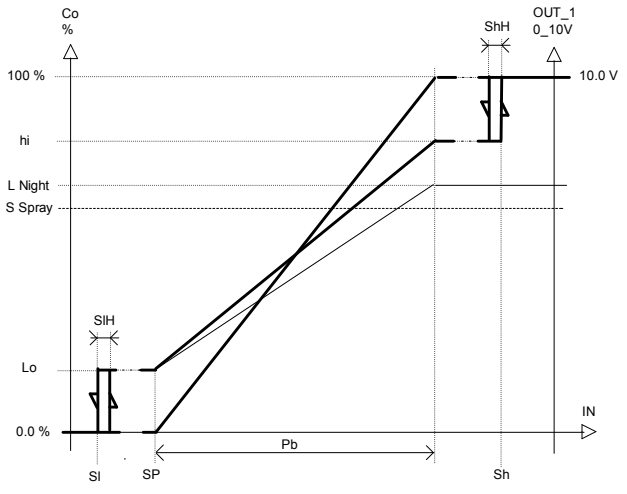

INVERSE mode, SP at min

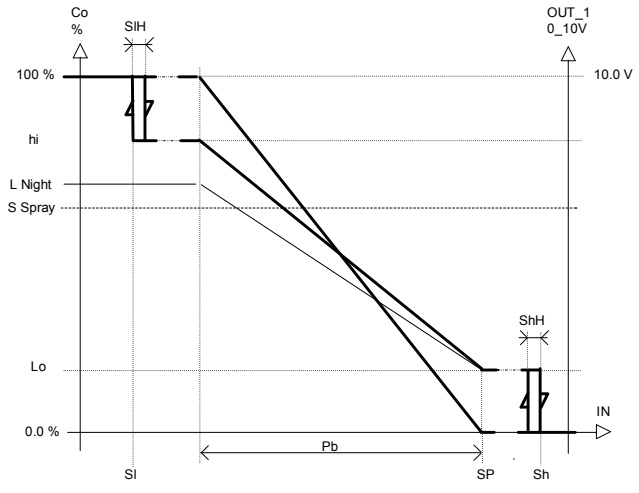

The analog output OUT-2 generates a signal 1-10V per Spray Unit which changes proportionally to the main input signal, considering the SP, USP and UPB current values.

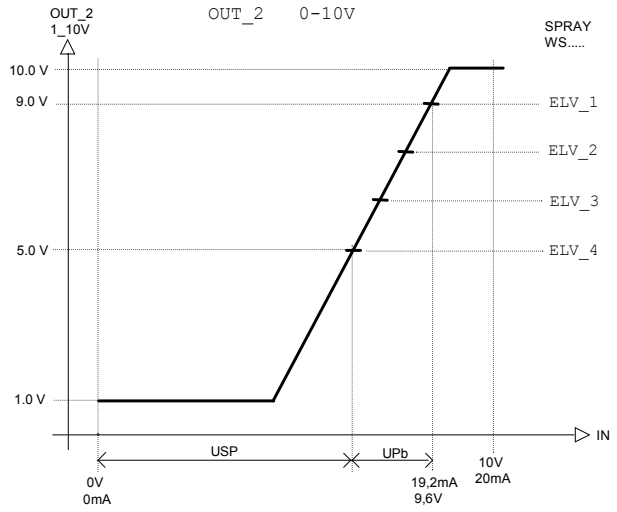

Out 1	Value of the output command OUT_ 2 per Spray unit WS… AWS ...
IN	Value of the input signal ruling
SP	Set point value
USP	Set Point per external Spray unit (output OUT-2)
UPb	Proportional band per external Spray unit (output OUT-2)
ELV_1.....ELV_4	Electro valves ON/OFF spray unit WS ... AWS ...

N.B. For further details on this functional feature, when the control unit is connected to a ECM AWM (Air-Water-Manager = ECM + AWS) , see chap. 5 of the AWS manual.

4.3 MASTER " PID ": PROPORTIONAL CONTROLLER INTEGRATIVE DERIVATIVE

The speed command for fans varies to keep at the Set Point value (SP) the main signal, higher (factory default) or lower in value, between the two connected at the inputs. Action can be either:
DIRECT : output increases as input increases (factory default)
INVERSE : output decreases as input increases.
N.B. The device has been factory set up for the proportional adjustment " Master P " (see par. 4.2), the " Master PID " adjustment should be purposely turned on, see par. 6.4.4.

The following diagram shows the action of the PID controller:

• At regime, meaning after the transitional adjustment has ended and far from the minimum and maximum limits, the action of the PID controller maintains the value (IN) of the measured magnitude by the transducer at Set-Point, the command of fans (Co) can show a value ranging from 0% to 100% depending on what is required to maintain balance.

• During these transitional stages , if the input value (IN) moves around Set-Point but remains within the Proportional Band (P), the command to fans (Co) varies from 0% to 100% to bring the value of input (IN) to Set-Point (SP). If the value of input (IN) exits the proportional band (P), the command of fans goes back to 0% or 100%.

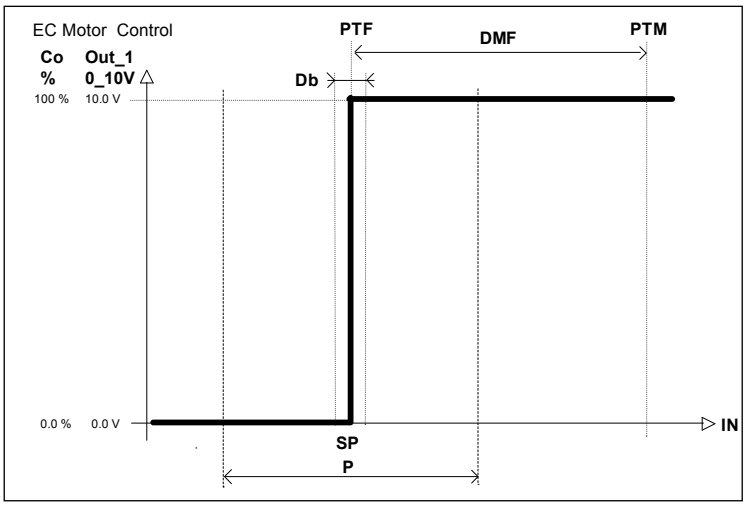

Out 1	Value of the output command Out 1, for EC fans
CO	Speed command transmitted to EC fans (in % of MAX speed)
IN	Value of the input signal
SP	Set point value
P	Proportional band
PTF	Temperature or Pressure MINIMUM running, is tied to the conditions of the device, setting the minimum possible to achieve greater energy savings to the compressor
PTM	Temperature or Pressure MAXIMUM running, can be reached with power to be exchanged and room temperature at project conditions
DMF	Difference of temperature or pressure (PTM -PTF) the shift of input from PTF to PTM occurs after increase of room temperature.
Db	Dead band around the SP, equal to +/ - 2.5% of P, to enable see par. 3.3 . When enabled it freezes the value of the fans command if the IN value is inside

N.B. At the moment the use of output OUT_2 to control the "Spray WS….." unit is not allowed when fans are managed by the PID control.

4.4 SPEED BANDS, JUMP RESONANCE ZONES (This function can be used with noisy EC fans).

It is possible to define the jump of two speed bands to avoid for example the high sound level emission (resonance zone) by fans, as for fans commanded by a controller with phase cut.
The start and end of each zone can be programmed freely, the two zones should not overlap.

The following diagram shows a graphic display of the aforesaid :

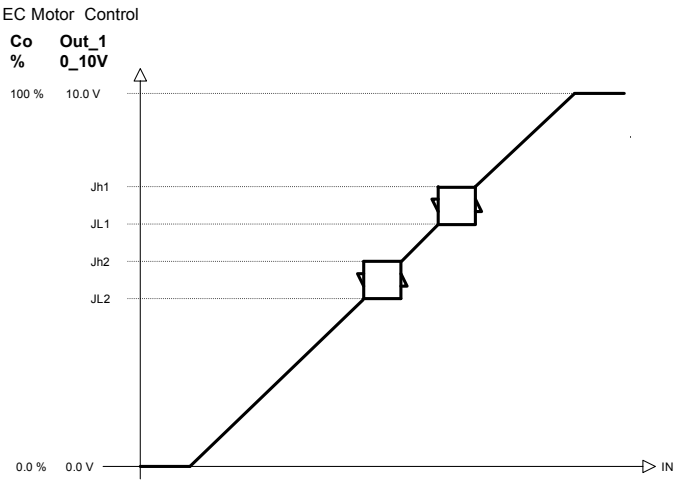

Jh1	Upper extremity zone 1 of the speed command to jump
JL1	Lower extremity zone 1 of the speed command to jump
Jh2	Upper extremity zone 2 of the speed command to jump
JL2	Lower extremity zone 2 of the speed command to jump

To set and for default values see par. 6.3

4.5 Analog outputs 0-10V : OUT 1 and OUT 2

The two analog outputs OUT_1 and OUT_2 can be preset to function in one of the four modes, for programming see par.6.4.3 parameters C7 and C8. .
SLAVE 0-10 : the output voltage is directly proportional to the parameter " Speed Command" (Co), see par 5.1 . It is used to pilot one or more slave units with 0 -10 V analog input.
SPRAY 1-10 : the output voltage varies in a directly proportional mode to the main input signal, considering the SP, USP and UPB current values. The signal never drops to zero, but always ranges between 1 and 10V. It is used to pilot WS & AWS Spray units…. (Factory default for Out_2) . For function diagrams see par. 4.1 and par. 4.2 .
MASTER 0 -10 direct: the output voltage varies in a directly proportional mode to the main input signal, considering the SP, USP and UPB current values as for the following diagram.

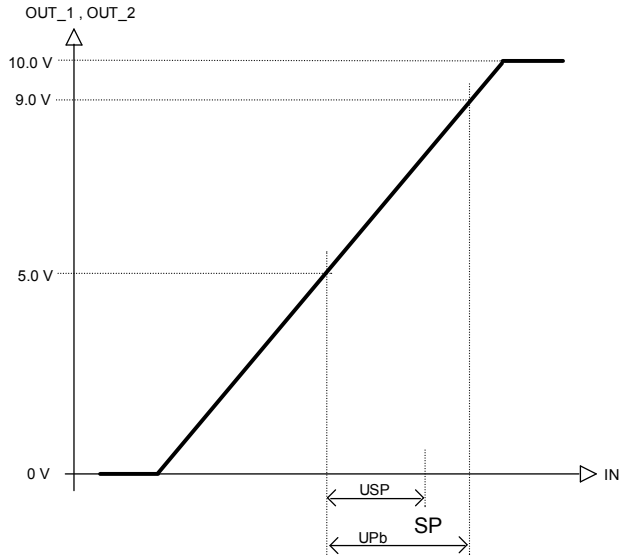

Out 1	Value of the output command Out-1 0-10 Vdc
Out 2	Value of the output command OUT- 2 per Spray unit WS… AWS ...
IN	Value of the input signal
SP	Set point value
USP	Set Point for WS Spray unit (output OUT - 2)
UPb	Proportional band for WS Spray unit (output Out-2)

MASTER 10 -0 reverse: the output voltage varies in a directly proportional mode to the main input signal, considering the SP, USP and UPB current values as for the following diagram

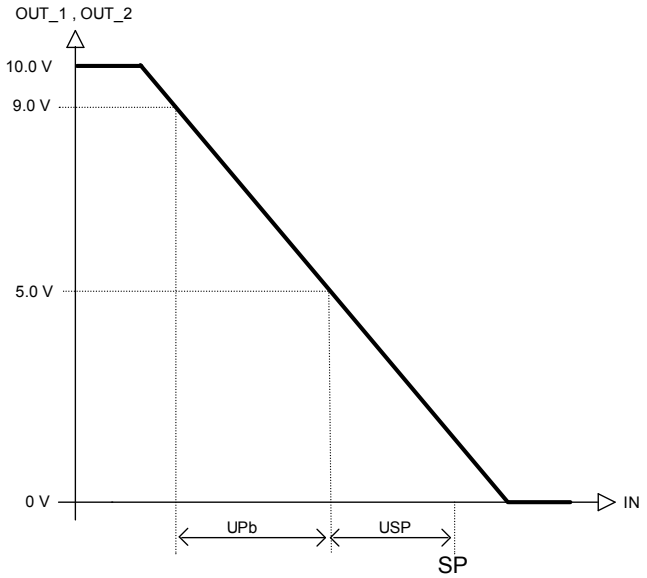

Out 1	Value of the output command Out - 1 0-10 Vdc
Out 2	Value of the output command OUT_ 2 per Spray unit WS… AWS ...
IN	Value of the input signal
SP	Set point value
USP	Set Point for WS & AWS Spray unit (output OUT-2)
UPb	Proportional band for WS & AWS Spray unit (output Out-2)

4.6 RESPONSE OF EC EBM -PAPST FANS WITH 0 -10V COMMAND

EC fans with analog command 0 -10V have a special Command Voltage/Fan Speed described in the following diagram:

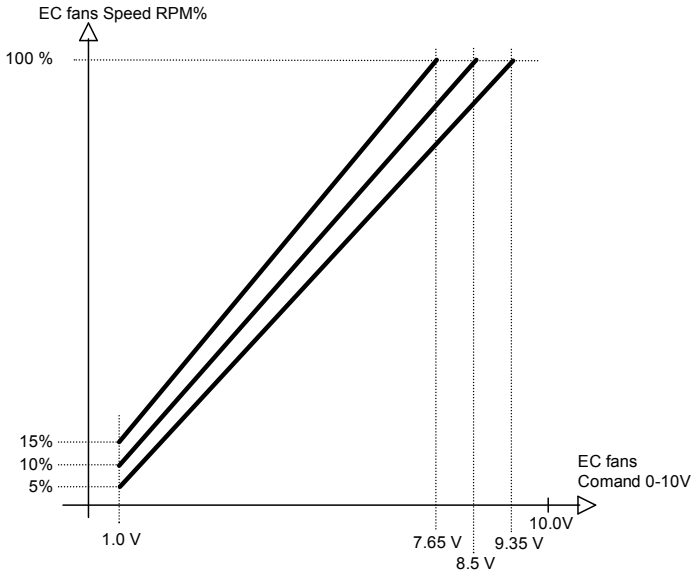

Minimum speed: is reached with a command voltage of 1 V, its nominal value is 10 % of the maximum speed, its real value can range between 5% to 15% of the maximum speed. Below 1 V the fan stops.
Maximum speed: value 100 % of the maximum nominal speed is reached with a nominal command voltage of 8.5 V, actually 100 % of speed can be reached with a voltage command which ranges from a minimum of 7.65 V to a maximum of 9.35 V.

N.B. These problems do not exist when the speed command is transmitted through ModBus network, in this case the minimum speed can be adjusted from a minimum which varies from version to version, usually around 40/50 RPM (below which the fan stops), the actual speed follows the command with a precision of about +/- 1% over the entire speed range.

4.7 WASH CYCLE OF THE EXCHANGER (WASHING)

When the controlling unit ECM is connected to an AWS (AWM),
exchanger, with the modalities described in the following chart: it may also conduct periodic cycles of washing of the heat

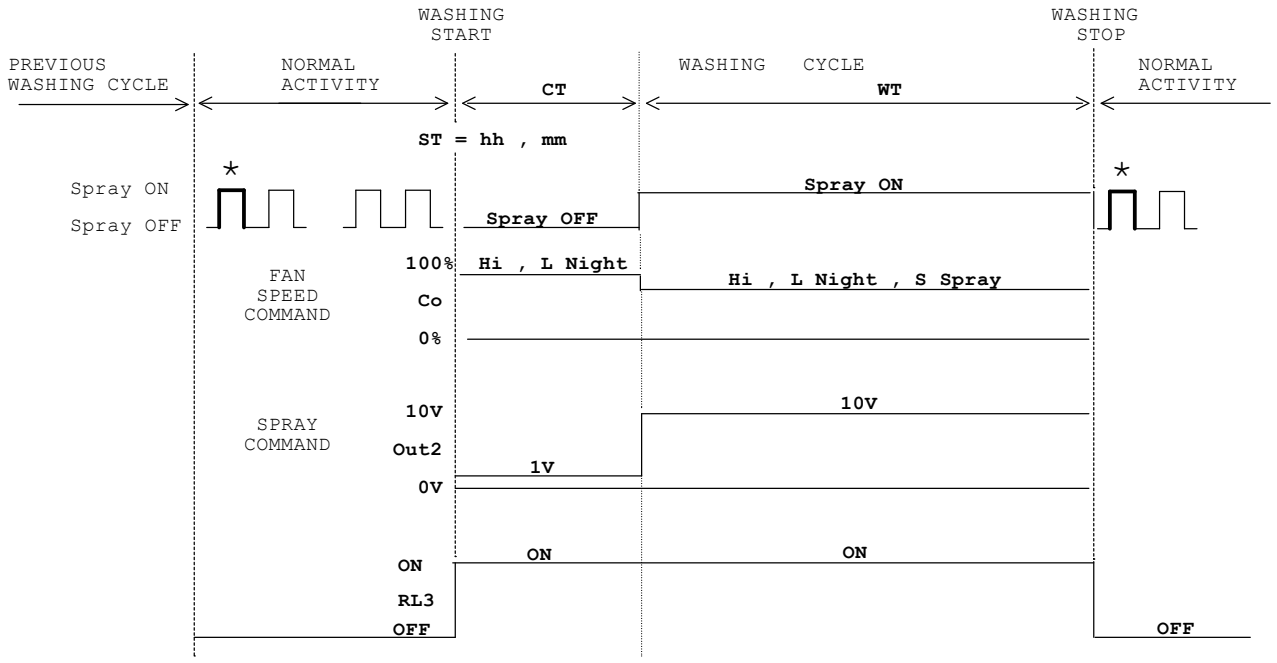

The washing is done maximum once a day, at the ST time (hours, minutes) set by the operator.
The washing procedure consists of the following phases:
1. Stop of the fluid supply to the exchanger via the activation of the relay RL3;
2. Cooling exchanger for CT minutes with the fan speed to the maximum allowed by the settings limit the maximum limit and the night (he won the minor) ;
3. Dry the exchanger for WT minutes with fan speed at fixed speed SSpray or the maximum allowed by the settings , maximum limit (Hi), night limit (the minor wins) .
NB: The washing is carried out if, and only if , during the previous operation ("Normal Activity") there was at least one trigger of the spray (*)
Error Messages : If, during the washing function a STOP is forced, or the power supply or hydraulics fails, when back to normal conditions the message " Washing not Carried " will appear and will remain until the next washing is done properly .

To set the parameters of this function see par. 6.4.7

4.8 EXCHANGER LOW-CAPACITY

The following procedure can only be enabled in the mode "Command Fans with Serial RS-485 ModBus" (see par. 5.3 e 5.4)

The heat exchanger power is controlled by adjusting the air flow, once the minimum speed of the fans is reached any further reduction of power is only possible disabling some of them.
When the value of the " Co " parameter (Fan Speed Command) falls below the " Speed OFF " value, a group of fans is disabled, a time interval equal to " Pause " is needed so that the system stabilizes. Normally there is an increase in the value of " Co" above the " Speed OFF " value, given the decreased the number of active fans.
If this does not happen, and the value of " Co " is still below the " Speed OFF " value the next group of fans is disabled.
This process continues until the last group of fans, that remains active and follows the command value Co.

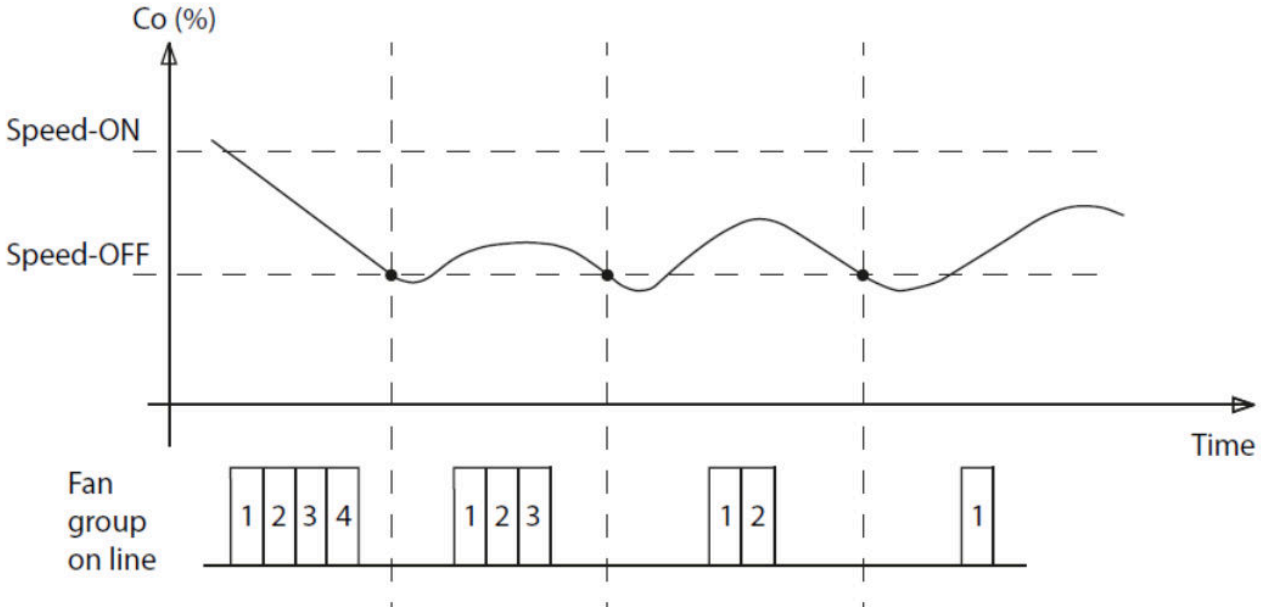

Starting from Co = 0 , the process is reversed, the first group of fans is put in rotation. When the value of the " Co " parameter (Fan Speed Command) exceeds the value of " Speed ON " the next group of fans activates . Then a time interval equal to "Pause " is needed so that the system stabilizes, and so on. The groups consist of one or two fans

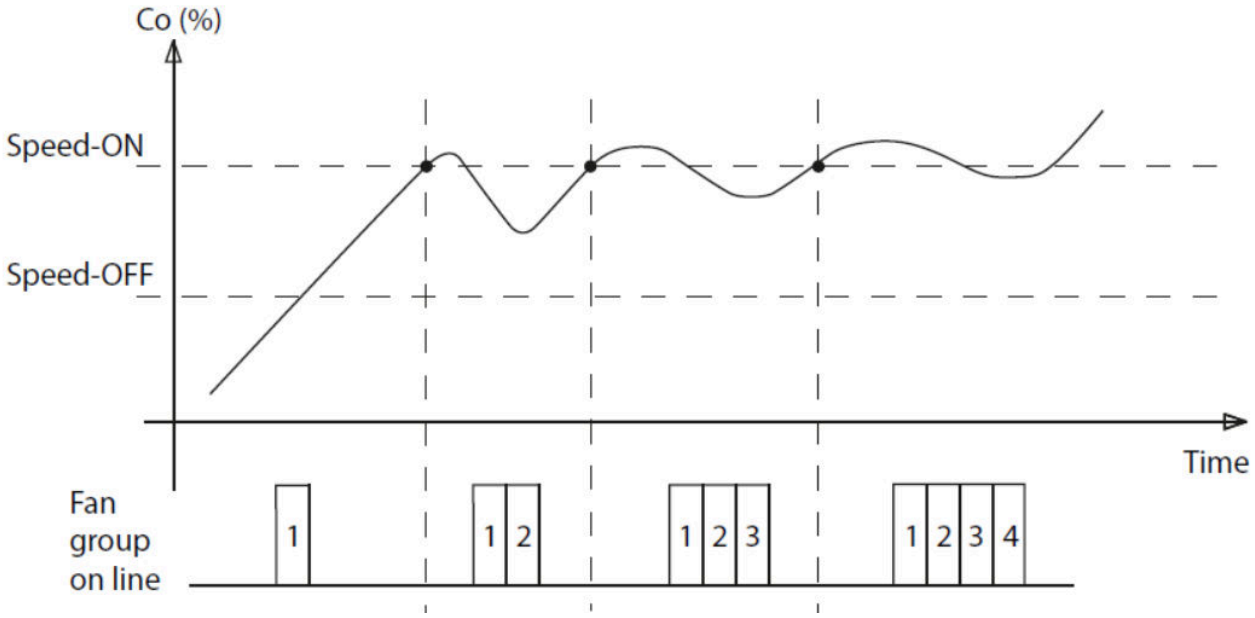

To set the parameters for this function see par. 6.4.8

4.9 ANTI LOCK FAN

In order to avoid damages to the fan, caused by long periods without use, or by accumulations of snow / ice clinging to the protection grid, you should use this function to operate fans for a few hours at predetermined intervals and at a certain speed. The fans move all together.

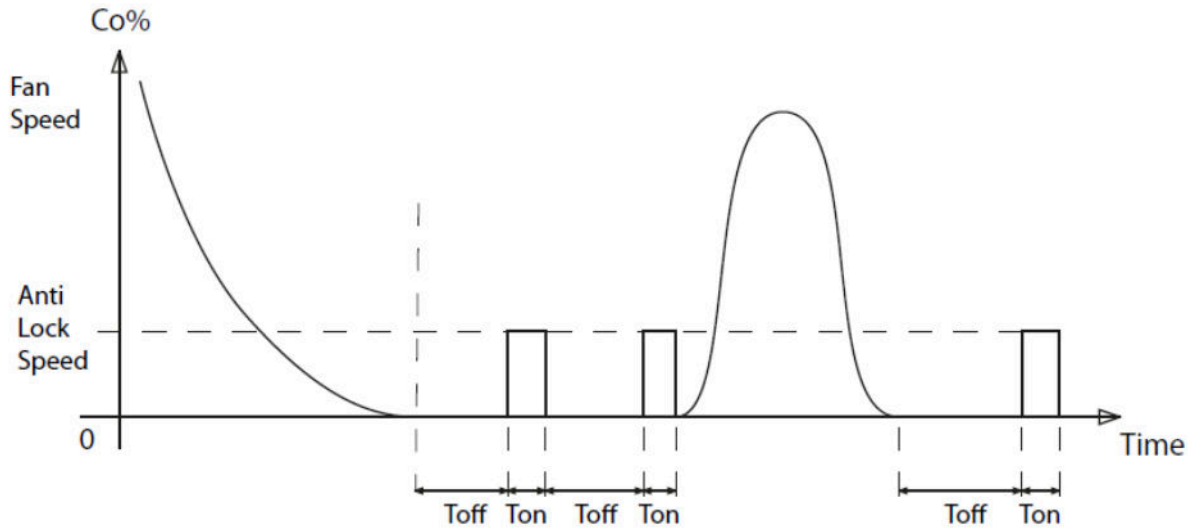

N.B. The function is enabled if and only if the speed command Co is equal to zero. The calculation of the frequency time "Off " starts from the moment Co vanishes.
To set the parameters for this function see par. 6.4.9

4.10 RTC NIGHT Limit

The maximum night speed limit " Lnight " can also be activated using the internal clock of ECM (RTC). The operation is in parallel to the external contact S5; the limit " Lnight " is active if it is set in the time interval or if the contact input S5 is closed.

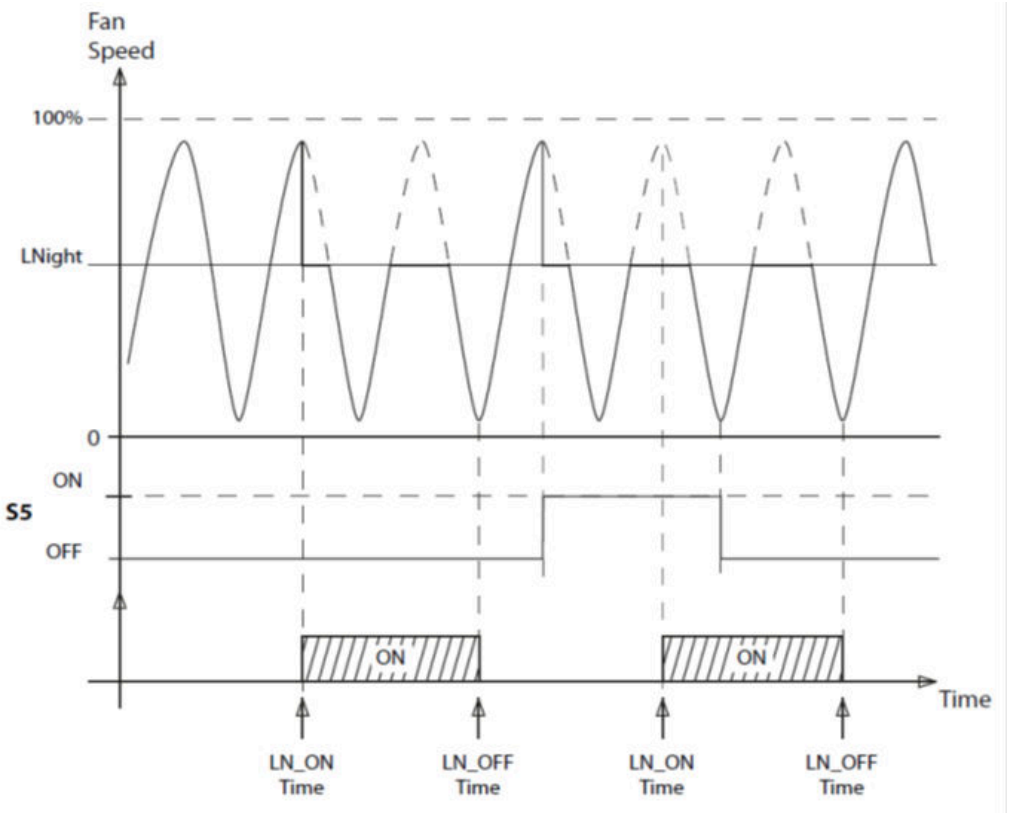

To set the parameters for this function see par. 6.4.10

4.11 BK1/BK2 BANK SWICHT with TEMPERATURE PROBE (IN3)

The switching from bench parameters BK1 to bench parameters BK2, and vice versa, can be realized by using the value of the temperature read from the entrance IN3. In this case the switch must be in the OFF SP .
The bench parameters BK1 gets back on if the temperature measured by the IN3 falls below the set value by an amount equal to "Hysteresis "

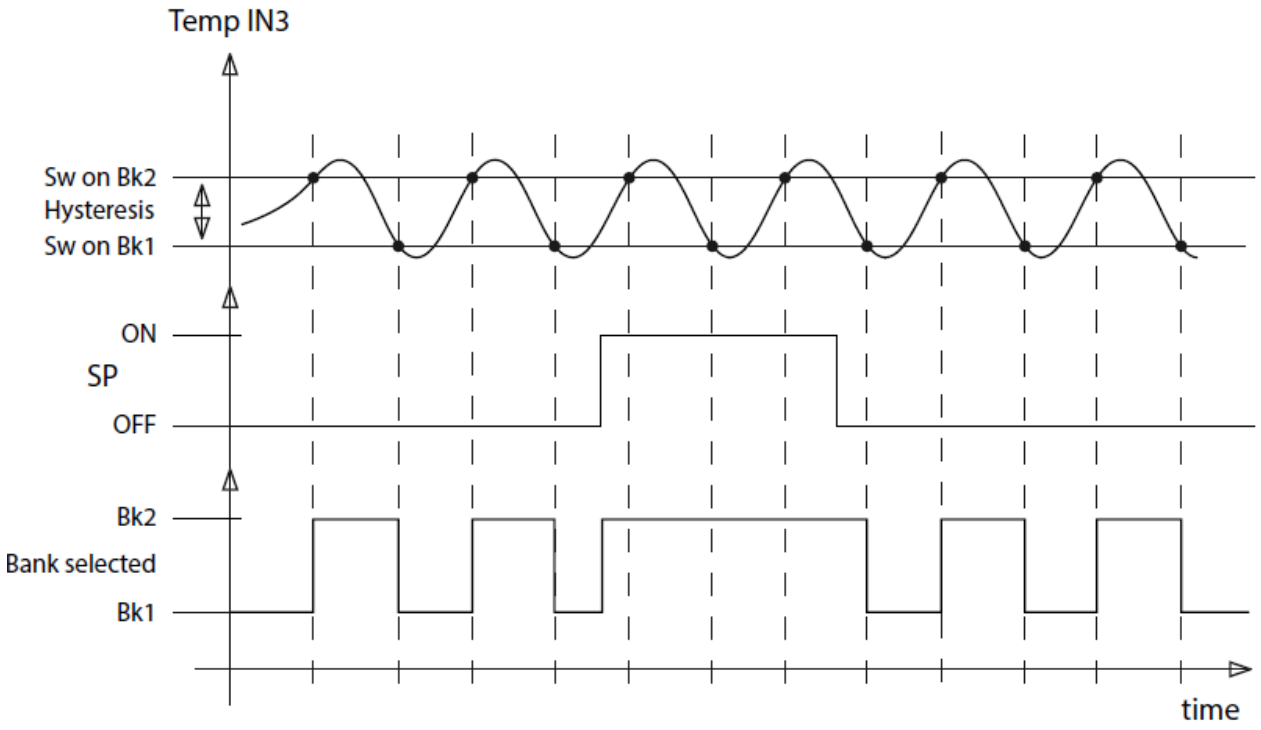

N.B. The function is enabled if and only if the speed command Co is equal to zero. The calculation of the frequency time "Off" starts from the instant Co vanishes.
To set the parameters for this function see par. 6.4.9

For the required wiring see section 2.3.1 par.2.3.4
For setting parameters see par. 6.4.11

5.0 PARAMETERS

The function of the device is guided by a series of parameters listed in the following table. Some of these are only reading (V), others can be changed to suit requirements of the user at a basic level (L) or at an expert level (K). A part of the latter is Subdivided into two sections related to benches 1 (Bk1 for SP1) and 2 (Bk2 for SP2).
Moreover there is a series of more general parameters known as "Configuration" which define the (Slave or Master) function mode, the number and type of signals applicable to inputs, the measurement unit to be used, the Set Point position, the management of relay RL1 and of analog outputs OUT-1 and OU T-2.
The values of the latter listed in par.6.4.3 are implicitly defined following the default configuration.

5.1 List of Work and Configuration Parameters

Name		Description	Bench	
Configuration in Use	-	Operating mode in use	**1 e 2**	**L**
MODBUS Page	-	ModBus communication	**1 e 2**	**K**
R.T. CLOCK Page	-	Viewing and editing Real Time Clock		
WASHING Page (****)	-	Washing exchanger		
LOW Capacity Page (****)	-	Operating at reduced power		
Anti-Lock Page (****)	-	Anti Lock Fans		
RTC Night Limit (LNight) Page(****)	-	Night Limit (LNIGHT) with RTC		
Fans Power (W) (**)	PW tot.	Total power absorbed by the EC Motors	**1 e 2**	**V**
Fans Current (A) (**)	I tot.	Total current in the DC -link of the EC motors		
Fans Speed (RPM) (**)	Speed	Rotation speed of the EC Motors		
Logic Board Temp. (°C)	TLogic	Temperature logic card in ° C		
output Slave	OUT_1	Value of 0 -10 Vdc output # 1		
output Spray	OUT_2	Value of output 1 -10 Vdc # 2		
Fan Speed Command	Co	Value of the speed control for peripherals (EC Motors)		
Used Inlet Signal & Set Point (*)	INx, SPx	Values of Input and the set point in use (x is 1 or 2)		
Inlet IN1 Value	IN1	Value of input 1		
Inlet IN2 Value (***)	IN2	Value of input 2		
Inlet IN3 Value (***)	IN3	Value of input 3 , switching Bk1 / BK2 temperature (****)		
1.1: Set -Point Bk1 (**)	SP1	Value of Set -Point Ranked # 1	**1 e 2**	**L**
1.2: Set -Point Bk2 (**)	SP2	Value of Set -Point Ranked # 2		
1.3: Max Night Limit	LNight	Limitation of Max RPM% night, general		
1.4: Speed when Spray	SSpray	Command at a constant speed (RPM%) Spray with active		
1.5: High Limit Jump1	JH1	RPM limit% higher speed (RPM%), to jump N.1		
1.6: Low Limit Jump1	JL1	RPM limit% lower speed (RPM%), to jump N.1		
1.7: High Limit Jump2	JH2	RPM limit% higher speed (RPM%), to jump Ranked # 2		
1.8: Low Limit Jump2	JL2	RPM limit% lower speed (RPM%), to jump Ranked # 2		

(*) INx, SPx Start page: parameters displayed on the screen when controller is switched-on
(**) parameters displayed only if using the Serial RS-485 ModBus fan command mode (see par. 6.1)
(***) Parameters not visible when configuration with only one input is enabled (see par. 6.4.3)
(****) Parameters visible only when the function is enabled

Parameters V: only display
Parameters L: display and adjustment BASIC level, with SW1-1 in "Off" position (factory default)
Parameters K: display and adjustment EXPERT level, with SW1-1 "On"

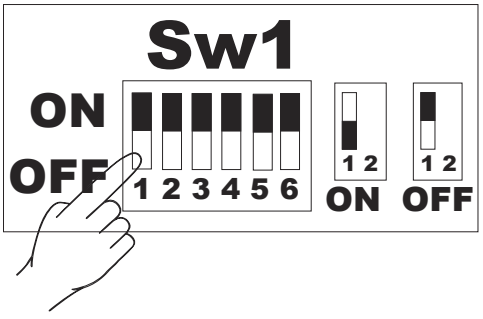

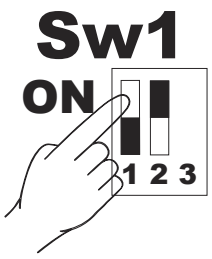

move SW1-1 to ON
for EXPERT level

Continuous "List of Displayable Parameters (of Work and Configuration)"

Name		Description	Bench	
"5.1: PID P Value (**)	**P**	PID Proportional Band		
"5.2: PID I Value (**)	**I**	PID Integral Component weight		
"5.3: PID D Value (**)	**D**	PID Derivative Component weight	**1 e 2**	**K**
"5.4: PID I Time (**)	**ti**	PID Integration time		
"5.5: PID D Time (**)	**td**	PID Derivation time		
"2.1: Fans PBand Bk1 (**)	**Pb1**	Proportional Band fans		
"2.2: Max Limit Bk1	**Hi1**	Limit of Maximum Speed (Max RPM)		
"2.3: Min Limit Bk1	**Lo1**	Limit of Minimum Speed (Min RPM)		
"2.4: Soft Start Bk1	**dE1**	Soft-Start time of acceleration/deceleration		
"2.5: Bypass Max Bk1	**Sh1**	Value of input to force VAC output voltage to maximum	**1**	**K**
"2.6: ShHysteresis Bk1	**ShH1**	Hysteresis on the Sh value		
"2.7: Bypass Min Bk1	**Sl1**	Value of input to force VAC output voltage to zero		
"2.8: Sl Hysteresis Bk1	**SlH1**	Hysteresis on the Sl value		
"2.9: Spray SetP Bk1	**USP1**	Set Point UR% for Spray unit		
"2.10: Spray PBand Bk1	**UPb1**	Proportional Band UR% for Spray unit		
"3.1: Fans PBand Bk2 (**)	**Pb2**	Proportional Band fans		
"3.2: Max Limit Bk2	**Hi2**	Maximum limit RPM%		
"3.3: Min Limit Bk2	**Lo2**	Minimum limit RPM%		
"3.4: Soft Start Bk2	**dE2**	Soft-Start Time of acceleration/deceleration		
"3.5: Bypass Max Bk2	**Sh2**	Value of input to force VAC output voltage to maximum	**2**	**K**
"3.6: ShHysteresis Bk2	**ShH2**	Hysteresis on the Sh value		
"3.7: Bypass Min Bk2	**Sl2**	Bypass limit of Minimum Speed (Cut-Off)		
"3.8: Sl Hysteresis Bk2	**SlH2**	Hysteresis on the Sl value		
"3.9: Spray SetP Bk2	**USP2**	Set Point UR% for Spray unit		
"3.10: Spray PBand Bk2	**UPb2**	Proportional Band UR% for Spray unit		
c0: Working Modes	**c0**	Modes of operation		
c1: Input Selection	**c1**	Source Selection		
c2: Input Type	**c2**	Type of input / s		
c3: Conversion Type	**c3**	Display conversion		
c4: Set -Point Mode	**c4**	Position of the Set - Point	**1 e 2**	**K**
c5: Reserved	**c5**	Reserved		
c6: Service Relays	**c6**	Use of auxiliary relays (RL1 , RL2 , RL3)		
c7: Analog Out1 0-10 Vdc	**c7**	Using Analog Output 0 - 10 Vdc # 1		
c8: Analog Out2 1-10 Vdc	**c8**	Using Analog Output 1 - 10 Vdc # 2		

(**) parameters only visible if in controller configuration
Parameters **V** : only display
Parameters **L** : display and adjustment BASIC level, with SW1-1 in "Off" position (factory default)
Parameters **K** : display and adjustment EXPERT level, with SW1-1 in "On" position



to EXPERT level

5.2 Display with 0-10 Vdc command Fans

The procedure described here below runs only when the ECM device has been set to receive the command of fans through analog output 0-10V Out-1, the dip-switch SW1-5 must be "ON".

A - After the initial stage has ended, the start page is displayed on screen:

1	---- Run ---- HH . MM	State of System: no working alarm
2	Ou1 6.5V Ou2 3.4V	Analog Output OUT-1 = 6.5 V Analog Output OUT_2 = 3.4 V
3	IN1 42,5 SP1 45,0 C	Main Input : IN1 = 42.5 °C Set Point selected SP1 = 45.0 °C
4	rtE -01	Configuration in use rtE-01

B - By pressing keys "UP" and "DOWN" it is possible to run down the circular list of parameters listed in the table of par. 5.1
For example by pressing "UP" the following is displayed:

1	---- Run ---- HH . MM	State of System: no working alarm
2	Inlet IN1 Value	Description of the selected parameter
3	IN1 42.5 Cels.	Initials / value and units of measurement of selected parameter
4	rtE -01	Configuration in use rtE-01

C —From here, pressing twice the key "DOWN" the following is displayed:

1	---- Run ---- HH . MM	State of System: no working alarm
2	Fan Speed Command	Description of the selected parameter
3	Co 67%	Initials / value and units of measurement of selected parameter
4	rtE -01	Configuration in use rtE-01

D - By pressing again the key "DOWN" the following is displayed:

1	---- Run ---- HH . MM	State of System: no working alarm
2	output Spray 1-10V	Description of the selected parameter
3	Out2 1.0 volt	Initials / value and units of measurement of selected parameter
4	rtE -01	Configuration in use rtE-01

E - By pressing " ESCAPE" the start page is displayed once more (A)

5.3 DISPLAY WITH EC EBM-PAPST FANS WITH RS-485 MODBUS COMMAND

The following procedure can only be enabled in the mode "Command ebm-papst Fans with Serial RS485 ModBus"

SW1-5 = ON
0-10Vdc Command

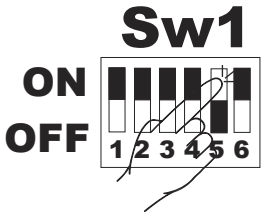

SW1-5 = OFF
EBM Modbus Protocol

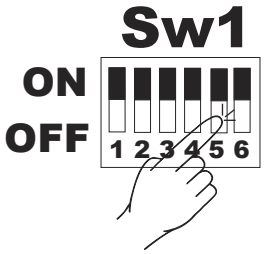

(FACTORY Default)

SW1-6 = ON
ZIEHL Modbus Protocol

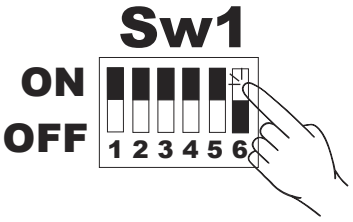

The ECM device has been set to command the EC ebm-papst fans through serial line COM-1, when dip-switch SW1-5 is in the " OFF " position.

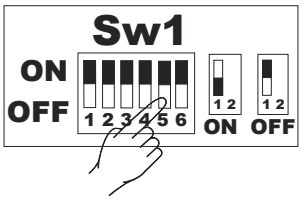

A - When the initial start up, configuration and mapping of fans stage has ended, the start page will be displayed showing Speed (RPM) and Power (W) data comprising the entire bench motors in the configuration map, connected and running :

1	---- Run ---- HH . MM	State of System: RUN (no working Alarm) Hours / Minutes of RTC (Real Time Clock)
2	298 RPM 480W total	Speed of motors 298 (RPM) 480 (W) Total Power absorbed by the running Fans
3	IN1 42,5 SP1 45,0 C	Input 1 value 42.5 °C 45.0 °C Set Point 1 value
4	rtE-01 Map.6 Run.6	Default configuration in use (rtE-01) N° (6) of Mapped fans N° (6) of Running Fans

B - Pressing keys "UP " and " DOWN " it is possible to scroll down the list of parameters in the table of par. 5.1, in a similar way to what was seen in par. 5.2 , except for lines N°1 and N°4 of the display which remain as above.

C - By pressing the key "**ENTER** " it is possible to examine the state of each fan, starting from the lowest value address:

1	ebm status OK Add 4	Fan state: OK = normal Selected Fan Address (4)
2	298RPM 80W ID 6	Speed 298 (RPM) Power absorbed by fan (80W) Identifier of the ebm type : 6
3	900 RPM MAX 216 h.wo	Maximum speed (D119) 900 (RPM) Total hours worked 216 (hours)
4	Emergency 300 rpm 6s	Emergency speed of the fan : 300 (RPM) Time Emergency Speed Start (10 s)

D - By pressing " ENTER " once more, the second data page of the EC Motor selected is displayed, the first line remains unchanged:

1	ebm status OK Add 4	Fan state : OK = normal Selected Fan Address (4)
2	Tp 34C Tm 30C Te 42C	Power Module temperature : 34°C Motor Temp. : 30°C Electronic card temp : 42°C
3	DC-link 146 mA 544V	Link of inverter : Current 146 (mA) Voltage 544 (V)
4	ebm SN: 1023 00 VFW	EBM Fan series N° : 1023 00 VFW

E - After pressing "ENTER " once more the first data page of the selected fan is displayed (**C**).
F - By pressing " UP " or " DOWN " the data pages of the following or previous EC fan are displayed.
The data pages of all mapped, connected and functioning EC fans can be viewed in rotation.
G - By pressing " ESCAPE " the start page is displayed once more (**A**).

N.B. For more details on the significance of the aforesaid EC fans parameters, refer to the ebm-papst document mentioned at par. 1.1.

5.4 DISPLAY WITH EC ZIEHL-ABEGG FANS WITH RS-485 MODBUS AND COMMAND

The following procedure can only be enabled in the mode "Command with fans Ziehl-Abegg and control RS-485 Modbus"

The ECM device has been set to command the EC ziehl-abegg fans through serial line COM_1 when dip-switch SW1-5 is in the "OFF" position and the dip-switch SW1-6 is in the "ON" position.

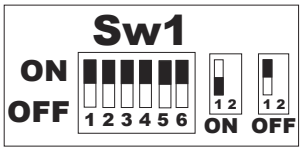

SW1-5 = ON
0-10Vdc Command

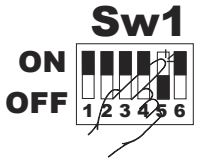

SW1-5 = OFF
EBM Modbus Protocol

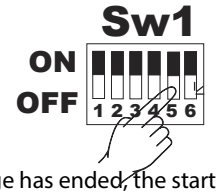

SW1-6 = ON
ZIEHL Modbus Protocol

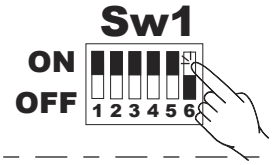

A - When the initial start up, configuration and mapping of fans stage has ended, the start page will be displayed showing Speed (RPM) and Power (W) data comprising the entire bench motors in the configuration map, connected and running :

1	---- Run ----	HH. MM	State of the System: no working alarm;	RTC Hours and Minutes
2	298Rpm	420W total	Speed of motors 298 RPM	Power absorbed: 420W
3	IN1 42,5	SP1 45,0 C	Input Value 1: 42,5 °C	Set-Point 1: 45,0 °C
4	rtE-01	Map.6 Run.6	Default configuration in use: rtE-01	EC Motors: 6 mapped and 6 working

B - Pressing keys "UP" and "DOWN" it is possible to scroll down the list of parameters in the table of par. 5.1, in a similar way to what was seen in par. 5.2, except for lines N°1 and N° 4 of the display, which remain as above

C - By pressing the key " ENTER " it is possible to examine the state of each fan, starting from the lowest value address:

1	Status OK.	Add. 4	Fan State: OK = normal	Fan address on ModBus network: 4
2	298 RPM	420 W	Speed 298 RPM	Power absorbed 420 watt
3	900 Rpm Max	FW 8.02	Maximum Speed: 900 RPM	Firmware Version : 8.02
4	Emergency 300 RPM	10 s	Emergency Speed of the fan: 300 RPM	Switching delay: 10 seconds

D - By pressing " ENTER " once more, the second data page of the EC Motor selected is displayed, the first line remain unchanged:

1	Status OK.	Add. 4	Fan State: OK = normal		Fan address on ModBus network: 4
2	Tp 34C Tm 30C	Te 42C	Power Module temperature : 34°C	Motor Temp. : 30°C	Electronic card temp : 42°C
3	DC-link 146 mA	544 V	DC Link Inverter Current: 146 mA		Voltage: 544 V~
4					

E - After pressing " ENTER" once more the third data page of the EC Motor selected is displayed, the first line remains unchanged:

1	Status OK.	Add. 4	Fan State: OK = normal	Fan address on ModBus network: 4
2	UDS FF39 05D6 3459		Unique Device Signature (first part)	
3	3639 6659 4318		Unique Device Signature (second part)	
4				

F - After pressing "ENTER" once more the first data page of the selected fan is displayed (**C**).
G - By pressing " UP " or "DOWN " the data pages of the following or previous EC fan are displayed . The data pages of all mapped, connected and functioning EC fans can be viewed in rotation.
H - By pressing " ESCAPE " the start page is displayed once more (**A**).

N.B. For more details on the significance of the aforesaid EC fans parameters, refer to the Ziehl-Abegg document mentioned at par. 1.1.

6.0 PROGRAMMING PROCEDURES

6.1 Procedures to command fans

Before to start, choose the working function mode between Analog 0-10Vdc and MODBUS RS-485 commands, by the selections with Sw1

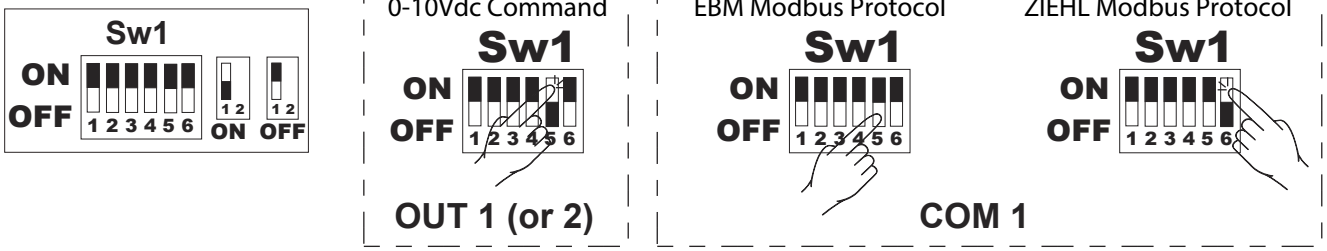

For the analog output command 0-10Vdc, are available OUT-1 (C7 selection) and OUT-2 (C8 selection)
For the MODBUS command, is available COM-1 (Sw1 for the selection between EBM or ZIEHL protocol)

6.2 Function Procedures

Choose into the List of Master or Slave working modes, the right SoftWare for the regulation, available with standard parameters regulation, available with standard parameters and ready to be used.

6.2.1 List of available Software Configurations

Selectable codes of Regulation SW	N°	Analog Input		Function
		Type	Transducer	
rS 020	2	0-20 mA, Ri = 100 ohm	- - - - -	SLAVE mode Controller (**)
rS 010	2	0-10 Vdc, Ri = 10 Kohm	- - - - -	
rPr420	2	4-20 mA, Ri= 100 ohm	4-20 mA	MASTER mode Controller (**)
rPr015	2		SPR 0-15 bar	
rPr025	2		SPR 0-25 bar	
rPr030	2		SPR 0-30 bar	
rPr045	2		SPR 0-45 bar	
rUu-05	2	0-5 Vdc, Ri= 10 Kohm	0-5 Vdc	
rPu030	2		0-30 bar	
rUu010	2	0-10 Vdc, Ri= 10 Kohm	0-10 Vdc	
rtE-01 (*)	2	NTC 10K@25 °C	STE -20/+90 °C (ECM work scale)	
rtE-02	2	NTC 10K@25 °C	STE 10/+90 °C (ECM work scale)	

ATTENTION : for Slave mode **4-20mA**, choose Master mode rPr420 and set: SP = 20 and Pb = 16

(*) The **rtE-01** configuration has been selected as **"Factory Default".**

(**) The MASTER mode Controller work like a stand alone regulator, with a direct connetion to a Probe or a Transducer, one or more, refers to hits own Set-point and Proportional Band, with PID or Proportional regulation

(**) The SLAVE mode Controller can work **only** with a mA or Vdc remote signal,one or more, coming from an external control system

6.2.2 Changing function modes

A configuration of the 12 available Software can be chosen, to replace the factory default (rtE-01) by following this procedure :

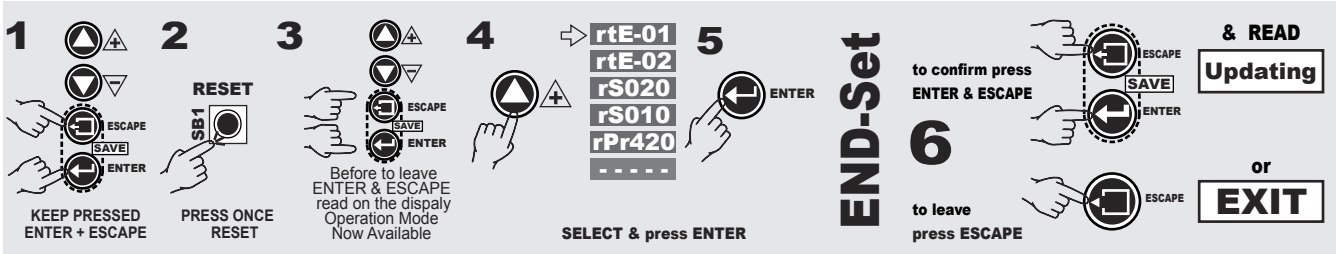

A- With the device Off, simultaneously keep the keys " ESCAPE" and "ENTER" pressed .
B- Start power supply of the controller (or if already powered, press the "reset" key one time); the screen will display the following:

1	--- Operation Mode ---	State of System: Change the work configuration
2	--- Now ---	
3	Available	
4	ENT: select ESC: exit	Key "ESCAPE" : exit and go back to start page

C- Simultaneously release the keys "ESCAPE" and "ENTER": the controller will switch on and after the welcome message, the screen will display the following:

1	--- Operation Mode ---	State of System: Change the work configuration
2	MASTER NTC -20 +90 °C	Initials current configuration, as for table at par. 6.2.1
3	rtE -01	Brief description of the current configuration
4	ENT: select ESC: exit	Key "ENTER" : to select, key "ESCAPE" : to exit and go back to start page

D- By pressing "UP" and "DOWN" the lines N°2 and N°3 will be displayed showing the available functions, see par. 6.2.1
E- Once the required configuration has been chosen, press "ENTER", the following will be displayed :

1	--- Operation Mode ---	State of System: Change the work configuration
2	MASTER mA 0-25 bar	Initials of current configuration as for table of par. 6.2.1
3	rPr -025	Brief description configuration of current work
4	ENT+ESC: save	Press keys "ENTER" + "ESCAPE" to save the new configuration

F- To exit and cancel the changes press ESCAPE, to return to point (B) .
G -To confirm the choice press keys ENTER + ESCAPE simultaneously: on line N°4 of the screen the following is displayed "Updating, please wait ". The configuration chosen will be saved and immediately used replacing the previous.

1	--- Operation Mode ---		State of System: Change the work configuration
2	MASTER mA 0-25 bar		Initials of current configuration as for table of par. 6.2.1
3	rPr025		Brief description configuration of current work
4	Updating: please wait		Message for the operator

The controller enters adjustment mode and the screen will display the START page (see par. 3.1).

6.3 Parameters "BASIC" level (L)

6.3.1 List of Parameters "BASIC" level

Here below is a list of basic level work parameters which can be changed at will (L).
The meaning of initials and sizes is explained in diagrams in Chap. 4.

Name	Init.	Description	Default	Min	Max	U.M.	Config.	Transducer
"1.1: Set Point Bk.1	**S1 (SP1)**	Value of Set -Point N. 1	45.0	-10.0	+90.0	°C	rtE-01	STE –20/+90°C
			45.0	10.0	+90.0	°C	rtE-02	STE –20/+90°C
			45.0	4.0	20.0	mA	rPr420	4-20 mA
			10.6	0	15.0	bar	rPr015	SPR 0 -15 bar
			17.0	0	25.0	bar	rPr025	SPR 0 -25 bar
			17.0	0	30.0	bar	rPr030	SPR 0 -30 bar
			25.0	0	45.0	bar	rPr045	SPR 0 -45 bar
			2.9	0	5.0	Vdc	rUu-05	0-5 Vdc
			17.0	0	30.0	bar	rPu030	0-5 Vdc
			6.0	0	10.0	Vdc	rUu010	0-10 Vdc
"1.2: Set Point Bk.2	**S2 (SP2)**	Value of Set-Point N. 2	45.0	-10.0	+90.0	°C	rtE-01	STE –20/+90°C
			45.0	-10.0	+90.0	°C	rtE-02	STE –20/+90°C
			14.0	4.0	20.0	mA	rPr420	4-20 mA
			10.6	0	15.0	bar	rPr015	SPR 0-15 bar
			17.0	0	25.0	bar	rPr025	SPR 0-25 bar
			17.0	0	30.0	bar	rPr030	SPR 0-30 bar
			25.0	0	45.0	bar	rPr045	SPR 0-45 bar
			2.9	0	5.0	Vdc	rUu-05	0-5 Vdc
			17.0	0	30.0	bar	rPu030	0-5 Vdc
			6.0	0	10.0	Vdc	rUu010	0-10 Vdc
"1.3: Max Night Limit	LNight	Limitation Max Night Speed	100	0	100	%	- - - - - -	All probes
"1.4: Speed when Spray	SSpray	Speed (RPM) with Spray enabled	100	0	100	%	- - - - - -	All probes
"1.5: High Limit Jump1 (*)	JH1	Higher Speed limit 1	100	0	100	%	- - - - - -	All probes
"1.6: Low Limit Jump1 (*)	JL1	Lower Speed limit 1	100	0	100	%	- - - - - -	All probes
"1.7: High Limit Jump2 (*)	JH2	JH2 Higher Speed limit 2	100	0	100	%	- - - - - -	All probes
"1.8: Low Limit Jump2 (*)	JL2	JL2 Lower Speed limit 2	100	0	100	%	- - - - - -	All probes

(*) Not required with EC ebm-papst fans.

6.3.2 Changing "BASIC" level parameters (L)

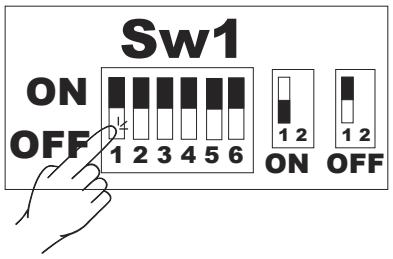

A - This mode is selected when Sw1-1 is "OFF" (Factory Default Configuration).

When device is running the start page is displayed,
in the case of 0-10Vdc analog commandof fans, it's the following :

1	---- Run ---- HH . MM	State of the System: no working alarm; RTC Hours and Minutes
2	Ou1 6.5V Ou2 3.4V	Analog output OUT_1 = 6.5 V Analog output OUT_2 = 3.4 V
3	IN1 42,5 SP1 45,0 C	Main Input : IN1 = 42.5 °C Set Point selected SP1 = 45.0 °C
4	rtE -01	Default configuration in use: rtE-01

While if the fans command is through serial RS485,) the following page is displayed:

1	---- Run ---- HH . MM	State of the System: no working alarm; RTC Hours and Minutes
2	298Rpm 420W total	Speed of motors 298 RPM Power absorbed: 420W
3	IN1 42,5 SP1 45,0 C	Main Input: IN1 = 42.5 °C Set Point selected SP1 = 45.0 °C
4	rtE -01 Map.6 Run.6	Default configuration used rtE -01 EC Motors: 6 mapped and 6 working

B - Simultaneously press keys " ENTER " and " ESCAPE" for a moment and the screen will display

1	-- Setting choice --	State of System: change parameters basic level
2	1.1 : Set Point Bk.1	Name of the selected parameter : 1.1 Set Point Bench N°1
3	SP1 45,0 Cels.	Initials : SP1, Value and Unit of Measurement : 45.0 °C
4	ENT: select ESC: exit	Programming suggestions

C - With keys " UP" or " DOWN " the screen displays lines N°2 and N°3 of basic level parameters listed in the table o paragraph 6.2.1, i.e.: select " LNight" Night Limit, to change press " ENTER ".

1	-- Setting choice --	State of System: change parameters basic level
2	1.3: Max Night Limit	Name of the selected parameter : 1.3 Maximum night limit
3	LNight 100%	Initials : LNight, Value and Unit of Measurement : 100%
4	ENT: selec ESC: abort	Programming suggestions

N.B. If the parameter selected is LNight , LSpray (JH1 , JL1 , JH2 , JL2) the controller interrupts the adjustment and commands the fans with the current value of the parameter itself, to check the effect of the change brought and choose the most appropriate value.

D - With " UP " or " DOWN " the value in line N°3 is changed bringing it to the required value, by keeping the key pressed the setting is accelerated:

1	-- Value changes --	State of System: change parameters basic level
2	1.3:Max Night Limit	Name of the selected parameter : 1.3 Maximum night limit
3	LNight 70%	Initials: LNight,Value and Unit of Measurement : 70%
4	ENT: save ESC: abort	Programming suggestions

E - By pressing " ESCAPE " the setting made is cancelled and it goes back to point (C), while by pressing " ENTER " the new setting is confirmed and this temporary message is displayed:

1	To Save	To saved changed data press keys "Enter and Escape"
2	Changed Values	This message reminds the operator that storage
3	Push ENT * ESC	of new values has not yet occurred
4		

And after point **C** is displayed, but with the new value LNight = 70%, if required the values of other parameters can be changed

F - After setting new values, to confirm choices made, store the values changed and exit, simultaneously press keys ENTER"+"ESCAPE," the first three lines on the display remain those of the last setting made, the fourth changes;

1	-- Setting choice --	State of System: change parameters basic level
2	1.3: Max Night Limit	Name of the selected parameter : 1.3 Maximum Night limit
3	LNight 70%	Initials : LNight,Value and Unit of Measurement : 70%
4	* updating: pls wait *	Programming suggestions

G - To cancel choices made and restore previous values press "ESCAPE," the temporary message is displayed :

1	Restoring Old Values	Restore old parameter values
2	Changed Values	The values changed are discarded
3	Discarded	
4		

And right after (**A**) is displayed again together with the start page.

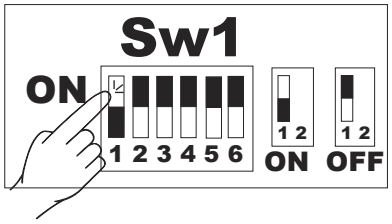

6.4 "Expert" level parameters (K)

The significance of initials and sizes is explained in the diagrams in Chap. 4
To select the EXPERT level, change the Sw1-1 position, from OFF to ON

6.4.1 List of Parameters "EXPERT" level Bench N°1 and Bench N°2

Name	Initials	Description	Default	Min	Max	U.M.	Configuration	Transducer Scale
			7.5	2.0	55.0	°C	rtE-01	STE –20/+90°C
			7.5	2.0	55.0	°C	rtE-02	STE –20/+90°C
			2.6	0.2	16.0	mA	rPr420	4-20 mA
2.1: Fans PBand Bk1	**Pb 1**	Proportional Band fans 1	2.4	0.5	15.0	bar	rPr015	SPR 0-15 bar
1.1: Fans PBand Bk2	**Pb 2**	Proportional Band fans 2	3.5	1.0	25.0	bar	rPr025	SPR 0-25 bar
			3.5	1.0	30.0	bar	rPr030	SPR 0-30 bar
			5.2	1.0	45.0	bar	rPr045	SPR 0-45 bar
			0.8	0.1	5.0	Vdc	rUu-05	0-5 Vdc
			3.5	1.0	30.0	bar	rPu030	0-5 Vdc
			1.6	0.2	10.0	Vdc	rUu010	0-10 Vdc
2.2: Max Limit Bk1	**Hi 1**	Maximum limit RPM %	100	0	100	%	- - - - -	- - - - -
3.2: Max Limit Bk2	**Hi 2**	Maximum limit RPM %						
2.3: Min Limit Bk1	**Lo 1**	Minimum limit RPM %	0	0	100	%	- - - - -	- - - - -
3.3: Min Limit Bk2	**Lo 2**	Minimum limit RPM %						
2.4: Soft Start Bk1	**dE 1**	Soft-Start Time acc/decel 1	2.0	1.5"	60.0"	sec	- - - - -	- - - - -
3.4: Soft Start Bk2	**dE 2**	Soft-Start Time acc/decel 2						
			+90.0	-20.0	+90.0	°C	rtE-01	STE –20/+90°C
			+90.0	-20.0	+90.0	°C	rtE-02	STE –20/+90°C
			20.0	4	20	mA	rPr420	4-20 mA
			15.0	0	15	bar	rPr015	SPR 0-15 bar
2.5: Bypass Max Bk1	**Sh 1**	Bypass Max 1	25.0	0	25	bar	rPr025	SPR 0-25 bar
3.5: Bypass Max Bk2	**Sh 2**	Bypass Max 2	30.0	0	30	bar	rPr030	SPR 0-30 bar
			45.0	0	45	bar	rPr045	SPR 0-45 bar
			5.0	0	5	Vdc	rUu-05	0-5 Vdc
			30.0	0	30	bar	rPu030	0-5 Vdc
			10.0	0	10.1	Vdc	rUu010	0-10 Vdc
			1	1	30	°C	rtE-01	STE –20/+90°C
			1	1	30	°C	rtE-02	STE –20/+90°C
			0.1	0.1	5.0	mA	rPr420	4-20 mA
			0.1	0.1	5.0	bar	rPr015	SPR 0-15 bar
2.6: ShHysteresis Bk1	**ShH 1**	Hysteresis on the Sh 1	0.1	0.1	8.0	bar	rPr025	SPR 0-25 bar
3.6: ShHysteresis Bk2	**ShH 2**	Hysteresis on the Sh 2	0.1	0.1	8.0	bar	rPr030	SPR 0-30 bar
			0.1	0.1	15.0	bar	rPr045	SPR 0-45 bar
			0.1	0.1	2.5	Vdc	rUu-05	0-5 Vdc
			0.1	0.1	15	bar	rPu030	0-5 Vdc
			0.1	0.1	5.0	Vdc	rUu010	0-10 Vdc

Uninterrupted "List of Displayable Parameters "EXPERT" level Bench N°1 and Bench N°2

Continuation “List of Displayable Parameters “EXPERT” level Bench N°1 and Bench N°2

Name	Initials	Description	Default	Min	Max	U.M.	Configuration	Transducer scale
			0	0	20.0		rS -020	
			0	0	10.0		rS -010	
			-20.0	-20.0	+90.0	°C	rtE -01	STE −20/+90°C
			-20.0	-20.0	+90.0	°C	rtE -02	STE −20/+90°C
			4.0	4.0	20	mA	rPr420	4-20 mA
2.7: Bypass Min Bk1	**SI 1**	**Bypass Min 1**	0	0	12	bar	rPr015	SPR 0 -15 bar
3.7: Bypass Min Bk2	**SI 2**	**Bypass Min 2**	0	0	25	bar	rPr025	SPR 0 -25 bar
			0	0	30	bar	rPr030	SPR 0 -30 bar
			0	0	45	bar	rPr045	SPR 0 -45 bar
			0	0	5	Vdc	rUu -05	0-5 Vdc
			0	0	30	bar	rPu030	0-5 Vdc
			0	0	10.0	Vdc	rUu010	0-10 Vdc
			0.2	0.1	10		rS -020	
			0.1	0.1	5.0		rS -010	
			1	1	30	°C	rtE -01	STE −20/+90°C
			1	1	30	°C	rtE -02	STE −20/+90°C
			0.1	0.1	5.0	mA	rPr420	4-20 mA
2.8: SI Hysteresis Bk1	**SIH 1**	**Hysteresis on the SI 1**	0.1	0.1	5.0	bar	rPr015	SPR 0 -15 bar
3.8: SI Hysteresis Bk2	**SIH 2**	**Hysteresis on the SI 2**	0.1	0.1	8.0	bar	rPr025	SPR 0 -25 bar
			0.1	0.1	8.0	bar	rPr030	SPR 0 -30 bar
			0.1	0.1	15.0	bar	rPr045	SPR 0 -45 bar
			0.1	0.1	2.5	Vdc	rUu -05	0-5 Vdc
			0.1	0.1	15.0	bar	rPu030	0-5 Vdc
			0.1	0.1	5.0	Vdc	rUu010	0-10 Vdc
			15.0	0	20.0		rS -020	
			7.5	0	10		rS -010	
			-1.6	-54.9	+55	°C	rtE -01	STE −20/+90°C
			-1.6	-54.9	+55	°C	rtE -02	STE −20/+90°C
2.9: Spray SetP Bk1	**USP 1**	**Set Point Spray 1 (OUT-2)**	-0.6	-8	+8	mA	rPr420	4-20 mA
3.9: Spray SetP Bk2	**USP 2**	**Set Point Spray 2 (OUT-2)**	-0.4	-7.5	+7.5	bar	rPr015	SPR 0 -15 bar
			-0.8	-12.5	+12.5	bar	rPr025	SPR 0 -25 bar
			-0.8	-15	+15.0	bar	rPr030	SPR 0 -30 bar
			-1.0	-22.5	+22.5	bar	rPr045	SPR 0 -45 bar
			-0.2	-2.5	+2.4	Vdc	rUu -05	0-5 Vdc
			-1.0	-15	+15	bar	rPu030	0-5 Vdc
			-0.5	-5.1	+4.9	Vdc	rUu010	0-10 Vdc
			4.2	0.5	20		rS -020	
			2.1	0.2	10		rS -010	
			2.4	2.0	55.0	°C	rtE -01	STE −20/+90°C
			2.4	2.0	55.0	°C	rtE -02	STE −20/+90°C
2.10: Spray PBand Bk1	**UPb 1**	**Band Prop. Spray 1(OUT-2)**	1.0	0.5	12.0	mA	rPr420	4-20 mA
3.10: Spray PBand Bk2	**UPb 2**	**Band Prop. Spray 2(OUT-2)**	0.8	0.5	15.0	bar	rPr015	SPR 0 -15 bar
			1.2	1.0	25.0	bar	rPr025	SPR 0 -25 bar
			1.2	1.0	30.0	bar	rPr030	SPR 0 -30 bar
			1.8	1.0	45.0	bar	rPr045	SPR 0 -45 bar
			0.4	0.1	5.0	Vdc	rUu -05	0-5 Vdc
			1.5	1.0	30.0	bar	rPu030	0-5 Vdc
			0.8	0.2	10.0	Vdc	rUu010	0-10 Vdc

6.4.2 Procedure to change "EXPERT" level parameters (K)

Any changes should only be made by trained Staff

This mode is selected only when SW1-1 is "ON"

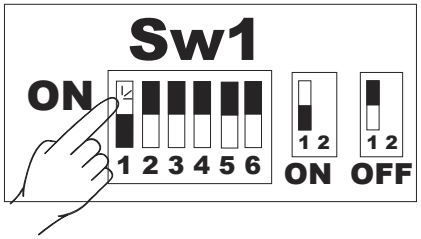

A - While the device is running, the start page will be displayed, in the case of analog 0-10Vdc fans command it is the following :

1	---- Run ----	HH . MM	State of System: no working alarm (*)	RTC Hours and Minutes
2	Ou1 6.5V	Ou2 3.4V	Analog Output OUT_1 = 6.5 V	Analog output OUT_2 = 3.4 V
3	IN1 42,5	SP1 45,0 C	Main Input : IN1 = 42.5 °C	Set Point selected SP1 = 45.0 °C
4	rtE-01		Default configuration in use rtE-01	

While if the fan command is through serial RS-485, the following page is displayed:

1	---- Run ----	HH . MM	State of System: no working alarm (*)	RTC Hours and Minutes
2	298Rpm	420W total	Speed of motors 298 (RPM)	Total power absorbed 420 (W)
3	IN1 42,5	SP1 45,0 C	Main Input : IN1 = 42.5 °C	Set Point selected SP1 = 45.0 °C
4	rtE-01	Map.6 Run.6	Default configuration used rtE-01	EC fans: 6 mapped and 6 running

B- Simultaneously press keys " ENTER" and " ESCAPE" for one time " : the screen will display

1	-- Expert Mode Menu --	State of System: change parameters Expert level	
2	1: BASIC Parameters	First submenu : parameters Basic level	
3			
4	ENT: select ESC: exit	Programming suggestions	

C- Press key " ENTER " to enter " Basic Level Parameters," for further details see par. 6.3

D- While by pressing " UP " or " DOWN " the other submenus available, scroll on line N° 2 :

2	**1 : BASIC Parameters**	Submenu 1 : Parameters Basic level (always visible)
2	**2 : EXPERT Bank1**	Submenu 2 : Parameters Expert level, bench N°1
2	**3 : EXPERT Bank2**	Submenu 3 : Parameters Expert level, bench N°2
2	**4 : SETUP Parameters**	Submenu 4 : Configuration Parameters
2	**5 : PID Parameters**	Submenu 5 : Parameters PID Controller (**)
2	**6 : MODBUS Parameters**	Submenu 6 : Communication Parameters of ModBus with PC Host, through COM-0
2	**7 : Real Time Clock**	Submenu 7 : Adjustment internal Clock (RTC : Real Time Clock)
2	**8 : Washing**	Submenu 8 : Parameters Exchanger Washing
2	**9 : Low Capacity**	Submenu 9 : Low Capacity operation Parameters (*)
2	**10 : Anti Lock Fan**	Submenu 10 : Anti Lock Fans
2	**11: RTC Night Limit**	Submenu 11 : Speed Night Limit (LNight) with RTC
2	**12 : Bank Switch**	Submenu 12 : Bk1/Bk2 Switching with Temperature in Input IN3
2	**13 : EC FAN Functions**	Submenu13 : Parameters of Fans with EC motors (*) ebm-papst or ziehel-abegg

(*) running only when the fan command is set through serial line RS485

(**) running only when the PID adjustment mode is selected (see par. 6.4.4)

E- When the required submenu is found, to access press "ENTER".
If for example submenu "2 : Expert Bank-1 " has been selected, the screen displays the following:

1	-- Setting choice --	State of System: change parameters basic level
2	2.1: Fans PBand Bk1	Name of the selected parameter: 2.1 Proportional Band 1
3	PB1 7.5 Cels.	Initials: PB1, Value and Unit of Measurement: 7.5 °C
4	ENT: select ESC: exit	Programming suggestions

F- By pressing keys " UP " or " DOWN " the other lines of the submenu listed in table of par.6.4.1 scroll to position 2.
Then proceed in a similar way to par. 6.3.2 , starting from point **D** onwards.

G- For the other submenus listed at point (**D**) of this paragraph, proceed in a similar way. Also see the tables in the following pages

6.4.3 List of Configuration Parameters, submenu "4 : SETUP Parameters"

The value of the default parameters listed in the following table are automatically loaded in the configuration stage, see par. 6.2.1.
On the side of each value there is the configuration using it.

Function	Display		Description	Default Configurations
	Code	Value		
Function	C0	GP1	Slave Controller: Uses input 1	-
		GP2	Slave Controller: Uses 2 inputs	rS-010 – rS-020
		r1	Master Controller: Uses input 1	-
		r2	Master Controller: Uses 2 inputs	rtE-01 / rtE-02 / rPr420 / rPr015 / rPr025 rPr030 / rPr045 / rUu-05 / rPu03 / rUu010
		rP1	PID Controller: Uses input 1	-
		rP2	PID Controller: Uses 2 inputs	-
		rAP1	Autotunig PID Controller: Uses input 1	-
		rAP2	Autotunig PID Controller: Uses 2 inputs	
Input selection	C1	OFF	Always uses input n°1	-
		hi	Always uses larger input	all
		Lo	Always uses smaller input	-
Type of input	C2	020	Signal in current 0 -20 mA	rS -020
		420	Signal in current 4 -20 mA	rPr420 / rPr015 / rPr025 / rPr030 / rPr045
		05	Signal in voltage 0 -5 Vdc	rUu -05 rPu030
		010	Signal in voltage 0 -10 Vdc	rUu010
		ntc	Signal in ohm 10 kohm@25 °C	rtE-01 / rtE-02
Conversion display	C3	oFF	No conversion	rPr420 / rUu-05 / rUu010
		0-15	Conversion 4 mA = 0 bar, 20 mA = 15 bar	rPr015
		0-25	Conversion 4 mA = 0 bar, 20 mA = 25 bar	rPr025
		0-30	Conversion 4 mA = 0 bar, 20 mA = 30 bar	rPr030
		0-45	Conversion 4 mA = 0 bar, 20 mA = 45 bar	rPr045
		0-30	Conversion 0,5 V = 0 bar, 4,5 V = 30 bar	rPu030
Position of Set-Point (*)	C4	Off	Slave Controller	rS010 / rS020
		hi	Master Controller: Set Point at Max.	rtE-01 / rtE-02 / rPr420 / rPr015 / rPr025 rPr030 / rPr045 / rUu-05 / rPu03 / rUu010
		Lo	Master Controller: Set Point at Min.	-
		Mid	PID Controller: Set Point in the middle	-
-	C5	-	NOT used	-
Relay RL1 Management	C6	0	RL1 = OFF if ECM = fail	all
		1	RL1=OFF if ECM= error or S2 active	-
		2	RL1=OFF if ECM= error or S2 active or OFF	-
		3	RL1= ON-OFF spray command with USP & UPb settings	-
Anallog Output 0-10Vdc OUT 1	C7	0	SLAVE 0-10 (Fans Command)	all
		1	SPRAY 1 -10 (Spray WS Command…)	-
		2	MASTER 0 -10 direct	-
		3	MASTER 10 - 0 reverse	-
		4	SLAVE 10 -0 reverse (Fans command)	-
Anallog Output 0-10Vdc OUT 2	C8	0	SLAVE 0-10 (Fans Command)	-
		1	SPRAY 1-10 (Spray WS Command….)	all
		2	MASTER 0-10 direct	-
		3	MASTER 10 -0 reverse	-
		4	SLAVE 10-0 reverse (Fans command)	-

(*) The possible values for C4 depend on the value of parameter C0
- If C0 = GP1 or GP2 C4 = Off, it CANNOT be changed
- If C0 = r1 or r2 C4 can be either hi or Lo, one of the two values can be chosen
- If C0 = rP1 or rP2 C4 = Mid, it CANNOT be changed

6.4.4 List of Parameters PID Controller, submenu "5: PID Parameters"

The following parameters only work in the PID function, to turn on this mode set C0=rP1 or C0 = rP2 (see par. 6.4.3, submenu " 4 : SETUP Parameters")

Description			Default	Min	Max	U.M.	Configuration	Transducer Scale
5.1 : PID P Value	**P**	PID Proportional Band	7.5	2.0	55.0	°C	rtE-01	STE –20/+90°C
			7.5	2.0	55.0	°C	rtE-02	STE –20/+90°C
			2.6	0.2	16.0	mA	rPr420	4-20 mA
			2.4	0.5	15.0	bar	rPr015	SPR 0 -15 bar
			3.5	1.0	25.0	bar	rPr025	SPR 0 -25 bar
			3.5	1.0	30.0	bar	rPr030	SPR 0 -30 bar
			5.2	1.0	45.0	bar	rPr045	SPR 0 -45 bar
			0.8	0.1	5.0	Vdc	rUu-05	0-5 Vdc
			3.5	1.0	30.0	bar	rPu030	0-5 Vdc
			1.6	0.2	10.0	Vdc	rUu010	0-10 Vdc
5.2 : PID I Value	**I**	PID integral Component	2	0.0	1000	-	all	all
5.3 : PID D Value	**D**	PID derivative Component	1	0.0	1000	-	all	all
5.4 : PID I Time	**ti**	PID Integration time	1.0	0.0	100.0	s	all	all
5.5 : PID D Time	**td**	PID Derivation time	10.0	0.0	100.0	s	all	all

6.4.5 List of ModBus Parameters for COM0, submenu "6: MODBUS Parameters"

The following parameters refer to the use of serial RS-485 (COM 0) dedicated to the connection with master unit (PC Host). For the other serial RS-485 (COM 1), dedicated to the connection with EC ebm-papst fans, the value of parameters is blocked in compliance with what is required by ebm-papst (see par1.1).

		Description	Default	Possible values
6.1 : ModBus Address	MBaddr	Address of the node on Modbus RTU network	247	1……247
6.2 : ModBus Baudrate	MBrate	Communication Baud Rate	9600	4800, 9600, 19200, 38400
6.3 : ModBus Type	MBtype	Communication parameters (*)	8b + 1s EVEN p.	8b + 1s EVEN p.
				8b + 1s ODD p.
				8b + 1s NO p.

(*) Communication parameters: Description of terminology used

8b	Data format : 8 bit
1s	Bit stop : 1
EVEN p .	Parity control : EVEN
ODD p.	Parity control: UNEVEN
NO p.	Parity control: NONE

6.4.6 List of Real Time Clock Parameters, submenu "7 : R.T. CLOCK Setup"

This submenu allows for reading and changing parameters of the internal clock (RTC : Real Time Clock)

A - Departing from point "D" of par. 6.4.2:

1	-- Expert Mode Menu --	State of System: change parameters Expert level
2	7 : R.T. CLOCK Setup	Submenu N°7 : Adjustment of internal Clock
3		
4	ENT: select ESC: exit	Programming suggestions

B - By pressing " ENTER " the first page is displayed, with keys " UP " and " DOWN" the value of HOURS can be changed, as shown on line 1 of the display. The datum is instead updated on line 3. During the set-up of the clock data those of the input time remain, plus the changes introduced.

1	7.1 : Hour	Submenu 7, function 1: the adjustment of HOURS is running
2		
3	16 : 16 : 03 18 / 02 /2015	Current data internal clock: Hours: Minutes : Seconds Day / Month / Year
4	ENT : OK & go ESC : KO & go	Programming suggestions

C- By pressing " ENTER " shift to MINUTES, leaving the HOURS as last value set, instead by pressing "ESCAPE" shift to minutes restoring the pre- existing value for HOURS.

1	7.2 : Minute	Minute Submenu 7, function 2: adjustment of MINUTES is running
2		
3	17 : 16 : 03 18 / 02 /2011	New Data internal clock: Hours : Minutes : Seconds Day / Month / Year
4	ENT : OK & go ESC : KO & go	Programming suggestions

D - Proceed the same way for the following pages, where compared to the previous page, only line 1 changes:

1	7.3 : Second		Second Submenu 7, function 3 : the SECONDS adjustment is running
1	7.4 : Day		Day Submenu 7, function 4 : the DAY adjustment is running
1	7.5 : Month		Month Submenu 7, function 5 : the MONTH adjustment is running
1	7.6 : Year		Year Submenu 7, function 6 : the YEAR adjustment is running

E - After programming the year the last page is displayed

1	ENT+ESC : sav. ESC :exit	Programming suggestions
2		
3	17 : 15 : 06 21 / 03 /2012	Current data internal clock : Hours : Minutes : Seconds Day / Month / Year
4	ENT : OK & go	Programming suggestions

F- By pressing " ENTER " + "ESCAPE " the clock is updated with the new values, the following temporary message is displayed and the start page reappears, see par. 3.1.

1		
2	Saving New Values	Saving new values in course
3	Please Wait	Please wait
4		

G - By pressing " ESCAPE " the clock is NOT updated, the following temporary message is displayed and point (**A**) reappears to introduce a new adjustment.

1	Restoring Old Values	Restoring Old Values Restoring Old Values
2	Changed Values	Changed Values The values changed are discarded
3	Discarded	
4		

H - By only pressing "ENTER" point (**B**) is displayed again to introduce a new adjustment.

6.4.7 List of Wash Exchanger Parameters, submenu "8 : WASHING Setup"

This submenu allows for reading and changing the parameters for washing the exchanger within a time limit, for further details see par. 4.7
The procedure is governed by the following parameters:

			Range	Default	U.M.
WF	Washing frequency	Firing rate, washing frequency	1, 2,…… 10	1	gg
ST	Start Time	Time of day when starting the washing	0…23 h / 0…59 m	0 , 1	hh.mm
CT	Cooling Time	Duration of the cooling phase of the exchanger	1….60	3	min
WT	Washing Time	Duration of the washing phase	1….60	15	min

N.B. By changing the operating mode (see par . 6.2.2) the default values of the parameters are restored (see above) and the function is deactivated .

A– Starting from point D of par. 6.4.2:

1	-- Expert Mode Menu --	State of System: change of parameters Expert level
2	8 : WASHING Setup	Submenu 8: Parameters Washing of the Exchanger
3		
4	ENT: select ESC: exit	ENT enter menu 8, ESC exit and go back to home page (HOME)

B– Pressing the " ENTER " key, if the function is NOT enabled, the following page is displayed:

1	WASHING Disabled	Washing Disabled
2		
3	UP /DO Enable/Disable	The UP key enables and the DOWN key disables the function
4	ESC: exit	ESC back to menu selection (A)

C- Instead, if the function is enabled (or you pressed the button UP during the previous step), the following page, with the current values of the parameters is displayed:

1	WASHING Enabled	Washing Enabled	
2	WF 1 gg ST 22:00	WF: Washing Frequency (1-10 days)	ST: Time of washing start
3	CT 3 min WT 15min	CT: Cooling Time (1-60 minutes)	WT: Washing Time (1 -60 minutes)
4	ENT: select ESC: exit	ENT, ESC: see below	

D - Pressing " DOWN" "Washing" is disabled
E - Pressing instead " ESCAPE " concludes the function and jumps to step N.
F - If the function is active, pressing " ENTER " the first parameter is selected, which appears on the first line of the display:

1	Set WF Washing freq.	It is possible to change the "Washing Frequency" parameter	
2	WF 1 gg ST 22:00	WF: Washing Frequency (1-10 days)	ST: Time of washing start
3	CT 3 min WT 15min	CT: Cooling Time (1 -60 minutes)	WT: Washing Time (1-60 minutes)
4	ENT: select ESC: exit	ENT, ESC: see below	

G - Using the " UP " or " DOWN " keys the value of the selected parameter is respectively increased or decreased.
H - Pressing instead " ESCAPE " concludes the function and jumps to step **N** .
I - Pressing the " ENTER " key the set value is momentarily saved and it steps to the next parameter

1	Set ST Start Time	"Start Time" function is selected	
2	WF 1 gg ST 22:00	ST: Time of washing start	WF: Washing Frequency (1-10 days)
3	CT 3 min WT 15 min	CT: Cooling Time (1-60 minutes)	WT: Washing Time (1 -60 minutes)
4	ENT: select ESC: exit	Programming suggestions	

L– Proceed in the same way for the following parameters :

1	Set CT Cooling Time	"Cooling Time" function is selected
1	Set WT Washing Time	"Washing Time" function is selected

M - After programming the last parameter , pressing " ENTER " it returns to step C to a new cycle setting
N - Pressing "ESCAPE " the following page appears :

1		
2	ESC: exit	Exit from the function with or without saving the changes
3		
4	ENT+ESC: save	

O - Pressing the " ESCAPE " key does NOT save the changes; the temporary message " Restoring Old Values Changed Values Discarded " appears and it goes back to step **A**.
P - Press " ENTER "+" ESCAPE " save the changes ; the message temporary " Saving New Values , Please Wait" and go back to step **A**.

6.4.8 Low Capacity Exchanger, submenu " 9 : Low Capacity "

Function enabled in the mode "Fans command with Serial RS -485 ModBus" (see par. 5.3 e 5.4)

This submenu allows for reading and changing the parameters for the low capacity functioning of the exchanger, for further details see par 4.8.
The procedure is governed by the following parameters:

		Range	Default	U.M.	ebm	Ziehl
					RPM	
Fan Rows	Number of fan rows on the exchanger	1, 2	1	-	-	-
Pause	Delay between the two successive insertion	1…..99	5	s	-	-
Speed ON	Speed of insertion in % of maximum speed (1)	3…80	25	%	75	100
Speed OFF	Speed of release in % of maximum speed (1)	3…80	15	%	50	70

(1) To get the most energy efficient , and the lowest sound level, work with the Minimum permitted speed (table values expressed in RPM) . In particular for the Ziehl -Abegg the minimum speed depends on the model of fan used :

Fan Model EC Ziehl -Abegg	Minimum Speed
FN091 -ZII. DC .Vxxx	35 RPM
FN091 -ZII. DG .Vxxx	35 RPM
FN091 -ZII. GG .Vxxx	57 RPM
FN091 -ZII. GL .Vxxx	70 RPM

N.B. By changing the operating mode (see par . 6.2.2) the default values of the parameters are restored (see above) and the function is deactivated .

A– Starting from point " D" of par. 6.4.2 :

1	-- Expert Mode Menu --	State of System: change of parameters Expert level
2	9: Low Capacity Setup	Submenu 9: low capacity functioning of the exchanger
3		
4	ENT: select ESC: exit	ENTER enter menu 9, ESC exit and go back to home page (HOME)

B - Pressing the " ENTER " key, if the function is NOT enabled, the following page is displayed:

1	Low Capacity Disabled	Low capacity funciotning of the exchanger Disabled
2		
3	UP /DO Enable/Disable	Pressing the UP o DOWN key it is possible to enable or disable the function
4	ESC: exit	ESC back to menu selection (A)

C - Instead, if the function is enabled (or you pressed the button UP during the previous step), the following page, with the current values of the parameters is displayed:

1	Low Capacity Enabled	Low Capacity enabled
2	Fan Rows 1 Pause 10s	No. Of fan rows (1 o 2) Switching delay of fans (8..50s)
3	Speed 25%on 15%off	Speed in % of max , insertion (on) or detachment (off) fans (1…99 %)
4	ENT: select ESC: exit	ENT, ESC: see below

D - Pressing " DOWN " the " Low Capacity" is disabled
E - Pressing instead " ESCAPE " concludes the function and jumps to step **O**.
F - If the function is active, pressing " ENTER " the first parameter is selected, which appears on the first line of the display :

1	Set Fan Rows	The "Fan Rows" function is selected
2	Fan Rows 1 Pause 10s	Number of fan rows (1 o 2) Switching delay of fans (8..50s)
3	Speed 25%on 15%off	Speed in % of max , insertion (on) or detachment (off) fans (1…99 %)
4	ENT: select ESC: exit	ENT, ESC: see below

G - Using the " UP " or " DOWN " keys the value of the selected parameter is respectively increased or decreased.
H - Pressing instead " ESCAPE " concludes the function and jumps to step **O**.
I - Pressing the " ENTER " key the set value is momentarily saved and it steps to the next parameter

1	Set Pause	"Pause" Switching delay of fans function is selected
2	Fan Rows 1 Pause 10s	Number of fan rows (1 o 2) Switching delay of fans (8..50s)
3	Speed 25% on 15% off	Speed in % of max , insertion (on) or detachment (off) fans (1…99 %)
4	ENT: select ESC: exit	Programming suggestions

L - Proceed in the same way for the following parameters :

1	Set % Fan Speed ON	"% Fan Speed ON" Starting speed function is selected
1	Set % Fan Speed OFF	"% Fan Speed OFF"Release speed function is selected

M - After programming the last parameter , pressing " ENTER " it returns to step **C** to a new cycle setting
N – Pressing "ESCAPE " the following page appears :

1		
2	ESC: exit	Exit from the function with or without saving the changes
3		
4	ENT+ESC: save	

O - Pressing the " ESCAPE " key does NOT save the changes; the temporary message "Restoring Old Values" Changed Values Discarded " appears and it goes back to step **A**.
P - Press " ENTER " + "ESCAPE" save the changes ; the message temporary " Saving New Values , Please Wait " and go back to step **A**.

6.4.9 Anti Lock Fan , submenu "10 : Anti Lock Fan"

This submenu allows for reading and changing the parameters for ant Anti Lock Fan function (for further details see par 4.9).
The procedure is governed by the following parameters

		Range	Default	U.M.
Fan Speed	Fan speed during operation	10….100	100	%
ON	Operation time	1.……999	120	Minutes
OFF	Resting time	1.……9999	8640	minutes

N.B. By changing the operating mode (see par . 6.2.2) the default values of the parameters are restored (see above) and the function is deactivated .

A - Starting from point D of par. 6.4.2 :

1	-- Expert Mode Menu --	State of System: change of parameters Expert level
2	10 : Anti Lock Fan	Submenu 10: anti lock fan
3		
4	ENT: select ESC: exit	ENT enter menu 10, ESC exit and go back to home page (HOME)

B - Pressing the " ENTER " key, if the function is NOT enabled, the following page is displayed:

1	Anti Lock Fan Disabled	Functioning in winter mode Disabled
2		
3	UP /DO Enable/Disable	Pressing the UP o DOWN key it is possible to enable or disable the function
4	ESC: exit	ESC back to menu selection (A)

C - Instead, if the function is enabled (or you pressed the button UP during the previous step), the following page, with the current values of the parameters is displayed:

1	Anti Lock Fan Enabled	Anti lock fan low capacity of the exchanger enabled
2	Anti Lock Speed 100%	Fan speed during ON time
3	Ton 120 m Toff 8640 m	Operation time (ON): 120 minutes Resting time (OFF): 8640 minutes
4	ENT: select ESC: exit	ENT, ESC: see below

D - Pressing " DOWN " the " Anti Lock Fan" is disabled
E - Pressing instead " ESCAPE " concludes the function and jumps to step **N**.
F - If the function is active, pressing " ENTER " the first parameter is selected, which appears on the first line of the display :

1	Fan Speed %	Fan speed regulation during ON time is selected
2	Fan Speed 100%	Fan speed during operation time (ON): 100%
3	Ton 120 m Toff 8640 m	Operation time (ON): 120 minutes Resting time (OFF): 8640 minutes
4	ENT: select ESC: exit	ENT, ESC: see below

G - Using the "UP " or " DOWN " keys the value of the selected parameter is respectively increased or decreased.
H - Pressing instead 'ESCAPE " concludes the function and jumps to step **N**.
I - Pressing the 'ENTER " key the set value is momentarily saved and it steps to the next parameter

1	Time ON (minutes)	Regulation of the duration of the ON time is selected, in minutes
2	Fan Speed 100%	Fan speed during operation time (ON): 100%
3	Ton 120 m Toff 8640 m	Operation time (ON): 120 minutes Resting time (OFF): 8640 minutes
4	ENT: OK & go ESC: KO & go	Programming suggestions

L - Proceed in the same way for the following parameters:

1	Set Time OFF (minutes)	Regulation of the duration of the OFF time is selected, in minutes

M - After programming the last parameter , pressing " ENTER " it returns to step **C** to a new cycle setting
N - Pressing "ESCAPE " the following page appears:

1		
2	ESC: exit	Exit from the function with or without saving the changes
3		
4	ENT+ESC: save	

O - Pressing the " ESCAPE " key does NOT save the changes; the temporary message " Restoring Old Values Changed Values Discarded " appears and it goes back to step **A**.
P - Press " ENTER " + " ESCAPE " save the changes ; the message temporary " Saving New Values , Please Wait" and go back to step **A**.

6.4.10 RPM% NIGHT LIMIT (LNIGHT) WITH RTC , SUBMENU "11: RTC NIGHT LIMIT"

This submenu allows for reading and changing the parameters for the activation of the maximum night limit (LNight = LN) using Real Time Clock (RTC) for further details see par 4.10).
The procedure is governed by the following parameters

		Range	Default	U.M.
LN / ON Time	Night limit activation, Hours and Minutes	0…23 h / 0…59 m	22 , 0	hh.mm
LN / OFF Time	Night limit deactivation, Hours and Minutes	0…23 h / 0…59 m	4 , 0	hh.mm

N.B. By changing the operating mode (see par . 6.2.2) the default values of the parameters are restored (see above) and the function is deactivated .

A– Starting from point D of par. 6.4.2:

1	-- Expert Mode Menu --	State of System: change of parameters Expert level
2	11 : RTC Night Limit	Submenu 11: activation night limit with rtc
3		
4	ENT: select ESC: exit	ENT enter menu 11, ESC exit and go back to home page (HOME)

B - Pressing the " ENTER " key, if the function is NOT enabled, the following page is displayed:

1	RTC N.Limit Disabled	Night speed limit (LNight) with RTC (Real Time Clock) disabled
2		
3	UP /DO Enable/Disable	Pressing the UP o DOWN key it is possible to enable or disable the function
4	ESC : exit	ESC back to menu selection (A)

C - Instead, if the function is enabled (or you pressed the button UP during the previous step), the following page, with the current values of the parameters is displayed:

1	RTC N.Limit Enabled	Night speed limit (LNight) with RTC (Real Time Clock) enabled
	LN ON Time H 22 M 0	
	LN OFF Time H 4 M 0	
4	ENT: select ESC: exit	ENT, ESC: see below

D - Pressing " DOWN " the " RTC Night Limit " is disabled
E - Pressing instead " ESCAPE " concludes the function and jumps to step M.
F - If the function is active, pressing " ENTER " the first parameter is selected, which appears on the first line of the display :

1	Limit ON Time	Night Limit ON Time regulation is selected
2	LN ON Time H 22 M 0	Night Limit ON Time LNight
4	LN OFF Time H 4 M 0	Night Limit OFF Time LNight
4	ENT : select ESC : exit	ENT, ESC: see below

G - Using the " UP " or " DOWN " keys the value of the selected parameter is respectively increased or decreased.
H - Pressing instead " ESCAPE " concludes the function and jumps to step M.
I - Pressing the " ENTER " key the set value is momentarily saved and it steps to the next parameter

1	Limit OFF Time	Night Limit OFF Time regulation is selected
2	LN ON Time H 22 M 0	Night Limit ON Time LNight
3	LN OFF Time H 4 M 0	Night Limit OFF Time LNight
4	ENT : OK & go ESC : KO & go	Programming suggestions

L - After programming the last parameter , pressing " ENTER " it returns to step C to a new cycle setting
M - Pressing " ESCAPE " the following page appears :

1		
2	ESC : exit	Exit from the function with or without saving the changes
3		
4	ENT+ESC : save	

N - Pressing the "ESCAPE " key does NOT save the changes; the temporary message " Restoring Old Values Changed Values Discarded " appears and it goes back to step **A**.
O - Press "ENTER " + "ESCAPE " save the changes ; the message temporary " Saving New Values, Please Wait" and go back to step **A**.

6.4.11 BK1/BK2 Bank switch with temperature probe, submenu "12 : Bank swicht"

This submenu allows for reading and changing the parameters for switching from Bk1 to Bk2 , and vice versa , using the temperature value read at input IN3 together with the state of input SP 1/2 (or further details see par 4.10).
The procedure is governed by the following parameters :

		Range	Default	U.M.
Switch on Bk2	Switching temperature from Bk1 to Bk2	-10….. 80 °C	15	°C
Hysteresis	Switching hysteresis from Bk1 to Bk2	1….. 20 °C	5	°C

N.B. By changing the operating mode (see par . 6.2.2) the default values of the parameters are restored (see above) and the function is deactivated .

A - Starting from point **D** of par. 6.4.2 :

1	-- Expert Mode Menu --	State of System: change of parameters Expert level
2	12 : Bank Switch	Submenu 11: switch bank parameterss Bk1 / Bk2 with input IN3
3		
4	ENT : select ESC : exit	ENT enter menu 12, ESC exit and go back to home page (HOME)

B - Pressing the " ENTER " key, if the function is NOT enabled, the following page is displayed:

1	Bank Switch Disabled	Switch Bk1/Bk2 with input IN3 disabled
2		
3	UP /DO Enable/Disable	The UP key enables and the DOWN key disables the function
4	ESC : exit	ESC back to menu selection (**A**)

C - Instead, if the function is enabled (or you pressed the button UP during the previous step), the following page, with the current values of the parameters is displayed:

1	Bank Switch Enabled	Switch Bk1/Bk2 with input IN3 in temperature enabled
2	Switch on Bk2 30°C	Switch temperature from Bk1 to Bk2 : 30°C
3	Hysteresis 5°C	Switch hysteresis from Bk2 to Bk1 : 5°C
4	ENT : select ESC : exit	ENT, ESC: see below

D - Pressing " DOWN " the "Bank Switch " is disabled
E - Pressing instead " ESCAPE " concludes the function and jumps to step **I**.
F - Pressing " ENTER " the Switch Temperature is selected which appears on the first line of the display :

1	Switch Temperature	Switch temperature is selected
2	Switch on Bk2 30°C	Switch temperature : 30°C
3		
4	ENT : select ESC : exit	ENT, ESC: see below

G - Using the " UP " or " DOWN " keys the value of the selected parameter is respectively increased or decreased.
H - Pressing instead " ESCAPE " concludes the function and jumps to step **N**.
I - Pressing the " ENTER " key the set value is momentarily saved and it steps to the next parameter

1	Hysteresis Value	Switch hysteresis is selected
2	Hysteresis 5°C	Switch hysteresis: 5°C
3		
4	ENT : OK & go ESC : KO & go	Programming suggestions

L - After programming the last parameter , pressing " ENTER " it returns to step C to a new cycle setting
M - Pressing "ESCAPE " the following page appears:

1		
2	ESC: exit	Exit from the function with or without saving the changes
3		
4	ENT+ESC : save	

N - Pressing the "ESCAPE " key does NOT save the changes; the temporary message " Restoring Old Values Changed Values Discarded " appears and it goes back to step **A**.

O - Press " ENTER " + "ESCAPE " save the changes ; the message temporary " Saving New Values , Please Wait" and go back to step **A**.

7.0 Procedure for Programming EC ebm-papst Fans, submenu " 13 : FAN Functions"

The following functions only run in mode Command Fans with Serial RS485 ModBus ebm-papst

This submenu allows for reading and changing several parameters of EC ebm-papst fans, for more details see document ebm-papst and ziehl-abegg mentioned in par 1.1.

A- Departing from point "**D**" of par. 6.4.2 :

1	-- Expert Mode Menu --	State of System : change parameters Expert level
2	13 : EC FAN Functions	Submenu N° 13 : function of fans with EC motors
3		
4	ENT : select ESC : exit	Programming suggestions

B- By pressing "ENTER" the submenu "FAN Functions" pops us, the first item is displayed

1	-- Expert Mode Menu --	State of System : change parameters Expert level
2	Emergecy Values	Submenu 13, function **1** : Parameters for Emergency speed (RPM & delay)
3	Set & Modify	Set & Modify
4	ENT : select ESC : exit	Programming suggestions

C- By pressing "UP" or "DOWN" the other submenus available scroll on lines N° 2 and N° 3 of the display:

2	Max Speed	Submenu 13, function **2** : **Fans Maximum speed**
3	Set & Modify	
2	Existing Fans	Submenu 13, function **3** : **Acquire MAP of EC fans CONNECTED**
3	Map Acquisition	
2	Total Addressing	Submenu 13, function **4** : **Procedure of ADDressing all EC fans**
3	Procedure	
2	Single Fan	Submenu 13, function **5** : **Procedure of Manual regulation of single EC fans**
3	Manual Driving	
2	Single Address	Submenu 13, function **6** : **Procedure of ADDressing a single EC fan**
3	Change	
2	Auto Adressing	Submenu 13, function **7** : **Procedure of Auto ADDressing EC fans (*)**
3	Procedure	(*) Valid only for EC fans ziehl-abegg

D- By pressing " ENTER" the selected submenu is displayed, for further details see the following paragraphs from par. 7.1 to par. 7.

E - By pressing " ESCAPE" go back to par. 6.4.2 point **A**.

7.1 Emergency Values, Set & Modify

Allows to manage emergency function of EC fans : if communication with the ModBus network does not occur for more than the time set (known as "safety interval," adjustable from 0 to 25"), each EC fan starts rotation at the preset emergency speed (adjustable from 0 to max) . In the presence of an alarm from the unit (see chapter 8), the fans are commanded to emergency speed without any delay.

N.B. If this function is not running and communication on the ModBus network fails, the EC fans will continue to function with the last speed command received.

*****ATTENTION*** the Factory default for "EC fans Emergency Speed (RPM & delay)" is 0% RPM (NO speed)**

A - Starting from point "B" of Chap. 7 the screen will display the following:

1	-- Expert Mode Menu --	State of System: change parameters Expert level
2	Emergecy Values	Submenu 13, function 1 : Parameters for Emergency speed (RPM & delay)
3	Set & Modify	Set & Modify
4	ENT: select ESC: exit	Programming suggestions

B - By pressing "ENTER" the following page is displayed with the current values of emergency parameters:

1	ENT : move + & - : modify	Programming suggestions
2	enabled OFF	Emergency speed NOT enabled : OFF
3	speed rpm 300	Value of emergency speed : speed = 300 rpm
4	time s 10	Safety interval: time = 10 s

C - By pressing "ENTER" the first modifiable item is displayed, line 2, highlighted by the "edit" position

1	ENT : move + & - : modify	Programming suggestions
2	enabled ON	Enable / Disable the function with UP and DOWN keys
3	speed rpm 300	Emergency speed = 300 rpm
4	time s 10	Safety interval = 10 s

D - By pressing " ENTER " line 3 is displayed, "speed" which can be adjusted with keys UP and DOWN from 0 to the maximum set value for EC fans (see par. 7.2).

E - By pressing " ENTER " line 4 is displayed "time" which can be adjusted from 0 to 25 s

F - Pressing the " ENTER " key concludes the setting of the values and the "edit" heading disappears; press "Enter" again to return to point "**C**" to be able to impose new settings. Press the UP or DOWN keys to move on to the next page which enables the effective programming of the EC fans with new values.

1	ENT: start process	Programming suggestions
2	enabled ON	Enable / Disable the function with UP and DOWN keys
3	speed rpm 100	Emergency speed = 100 rpm
4	time s 5	Safety interval = 5 s

G - By pressing " ENTER " programming the new EC fans values is launched, the following temporary message is displayed, lasting the required amount of time to update all fans.

1	work in progress	Update in progress
2	enabled ON	Enable / Disable the function with UP and DOWN keys
3	speed rpm 100	Emergency speed = 100 rpm
4	time s 5	Safety interval = 5 s

then back to point (**A**) .

H - By pressing "ESCAPE" at any time, the procedure in progress is annulled and display goes back to point (**A**)

N.B. After any change wait at least 5 seconds before reading the updated value

7.2 Max Speed, Set & Modify

Allows to set the maximum speed limit of EC fans (ebm- papst D119 register) up to the maximum allowed value for the type of EC fan used, for major details see document ebm- papst mentioned in par. 1.1. The update message is simultaneously transmitted The update message is simultaneously transmitted by all (Broadcast) machines in the network.

A - Departing from point "**C**" of Chap. 7 the screen will display the following:

1	-- Expert Mode Menu --	State of System: change parameters Expert level
2	Max Speed	Submenu 13, function 2: Maximum speed for all EC fans
3	Set & Modify	Set & Modify
4	ENT : select ESC : exit	Programming suggestions

B - By pressing "ENTER" the following page is displayed with the current values of emergency parameters:

1	D119 speed rpm 500	Register D119 , maximum speed : 500 rpm
2	INC , DEC : change value	Programming suggestions
3	ENT : start process	Programming suggestions
4	ESC : skip this step	Programming suggestions

C - By pressing " UP" or " DOWN " the numeric value in rpm on line 1 is increased or decreased up to the maximum absolute value allowed by the type of EC fan being used.

D - After setting the speed value required, by pressing " ENTER " programming the new value of EC fans is launched, the screen displays the following temporary messages in sequence

1	Work in progress	Update in progress
2	INC , DEC : change value	Programming suggestions
3	ENT : start process	Programming suggestions
4	ESC : skip this step	Programming suggestions

Then back to point (**A**)

E - By pressing " ESCAPE " at any time, the procedure in progress is annulled and display goes back to point (**A**).

N.B. After any change wait at least 5 seconds before reading the updated value

7.3 Existing Fans Map Acquisition

This function allows to check and acquire addresses (from 2 to 247 for ebm-papst and from 1 to 246 for ziehl-abegg) of EC fans in the ModBus network which have a different address than: "1" (ebm-papst factory default), hence already changed.

The operation can last up to a couple of minutes since the interrogation on each address is proposed twice.
To proceed it is important to know how many EC fans are present in the ModBus network and set research with this number.
At the end of the operation it is possible to compare it with the resulting number.

A - Departing from point "**B**" of Chap. 7, the screen will display the following:

1	-- Expert Mode Menu --	State of System : change parameters Expert level
2	Existing Fans	Submenu 13 Function 3 : **Acquire MAP of EC fans CONNECTED**
3	Map Acquisitin	
4	ENT : select ESC : exit	Programming suggestions

B - By pressing "ENTER " the addresses acquisition procedure starts

1	ebm Fan to find : 0	Write the number of the EC fans CONNECTED
2		
3		
4	ENT: to start process	Press "ENTER" to start process

C - By pressing immediately " ESCAPE " the procedure is stopped without changing the map of EC fans previously saved.

D - By pressing keys " UP " and " DOWN " it is possible to set the number of EC fans in the network.

- If the number of EC fans is left at zero, the previous map is zeroed and the display goes back to the condition at par. 3.1 meaning before installation.
- If a number of EC fans higher than those effectively available is set, all addresses from 2 up to 247 are scanned.

1	ebm Fan to find: 6	Set N° of EC fans to be found : 6
2		
3		
4	ENT: to start process	Press "ENTER" to start process

E - By pressing "ENTER" the procedure to interrogate addresses from 2 to 247 is launched, the screen displays the current address tested and below, the sequence of addresses of EC fans identified.

1	Searching Address: X	Current address in test stage : n° X
2	3 4 5 6	Addresses found : 3, 4, 5, 6 the search continues
3		
4		

F - The key " ESCAPE" stops the scanning, operator is asked whether to keep the partial map acquired by pressing "ENTER" or whether to abort the entire procedure by pressing " ESCAPE" again.

G - If research ends after finding all required EC fans, the screen displays the page listing the addresses found:

1	ENT save Map	Search of N°6 EC fans addresses underway
2	3 4 5 6 7	Addresses found : 3, 4, 5, 6, 7, 8
3	8	
4		

H - The key " ESCAPE " maintains the previous map, pressing " ENTER " saves the map acquired

7.4 Total Addressing Procedure for EC ebm-papst Fans

Guided procedure to assign an address ranging between 2 and 247, to a single EC fan on the ModBus network with the address "1" (ADD 1 is ebm-papst default value).

For EC fans with an address differing from "1" a preliminary update stage of the address to value "1 " is provided, in this case presumably it is possible to enable only one EC fan at a time with address "1 ", for example by removing power to the other EC fans with the same address "1". See diagrams chap.7.9

A - Departing from point "**C**" of Chap. 7.0 the screen will display the following:

***** ATTENTION*** Make sure that all EC fans are steadily Powered-ON for at least 15 seconds.**

1	-- Expert Mode Menu --	State of System: change parameters Expert level
2	Total Adressing	Submenu 13, function 4: **Procedure for ADDressing all EC fans**
3	Procedure	
4	ENT : select ESC : exit	Programming suggestions

B - By pressing "ENTER" the following page is displayed with the current values of emergency parameters:

1	ENT : put all powered	ENT: brings the address for all EC fans fed to value "1"
2	fans to address 1	
3	ESC : skip this step	ESC : skip this step (leave the previous addresses) and proceed
4	and proceed	

C - By pressing "ENTER" the address of all EC fans (steadily Powered ON) in the network, is updated to value "1" and it is possible to move on to point (**E**).

D - By pressing " ESCAPE" the address update step is skipped and it is possible to move to point (E).

E - The screen shows the following page, power the first EC fan of the network.

1	Power-ON a new Fan	Fan Power a new EC fan
2	new ADD 2	The first address proposed is the lowest
3	INC , DEC : change ADD	INC, DEC
4	ENT : program ESC : exit	ENT, ESC

N.B. At this point turn off all EC fans and wait at least 10 seconds before moving on to the next point "F".
The new address will be memorized in the fan only at the next restart.

***** ATTENTION*** Switch OFF the EC fan to memorize the new parameters**
At the Switch-ON, wait at least 10 seconds, before to read the new parameters.

F - By pressing " ENTER " the address is programmed and it is possible to move to the following EC fan whose address is proposed (N° immediately following). The procedure is the same for all other EC fans.

N.B. If during the programming phase point (**F**) the EC fan with address "1" is not found (for example because it is not powered-ON or because not enough waiting time was allowed in the stop or start phase), the following temporary message appears :

1		
2	EC Fan at ADD 1	EC fan with address "1" not found
3	not found!	
4		

Before returning to point **E** on the display page and resubmitting the same address: try programming again.

G - The procedure is terminated manually by the operator by pressing the " ESCAPE " key and the MAP of the fans is automatically generated (see par. 7.3): or terminated by time -out of five minutes from last key press without generating the new map of the fans.

7.5 Total Addressing Procedure for ziehl-abegg EC fans

Guided procedure to assign an ADDress ranging between 1 and 246, to EC fans ziehl-abegg on the MODbus network.

***** ATTENTION*** Make sure that all EC fans are steadily Powered-ON for at least 15 seconds.**

A - Departing from point "C" of Chap. 7.0 the screen will display the following:

1	-- Expert Mode Menu --	State of System: change parameters Expert level
2	Total Adressing	Submenu 13, function 4: **Procedure for ADDressing all EC fans**
3	Procedure	
4	ENT : select ESC : exit	Programming suggestions

B - By pressing "ENTER" the following page is displayed:

1	ENT: put all powered	ENT: brings the address for all EC fans fed to value "247"
2	fans to address 247	
3	ESC: skip this step	ESC : skip this step (leave the previous addresses) and proceed
4	and proceed	

C - By pressing "ESCAPE" the address update step is skipped to value "247" and it's possible to move on to point (E), eg. in case the fans are new or already programmed with the address "247".

D - By pressing "ENTER" the address of all EC fans in the network is updated to value "247".

E - The screen shows the following page :

1	Switch OFF all fans,	Switch OFF all EC fans
2	wait a few seconds,	wait a few seconds (10 s are enough)
3	push UP to proceed	push UP to proceed
4		

F - Switch OFF all EC fans and wait 10 seconds before pushing UP and proceed to step **G**.

G - The screen shows the following page :

1	Switch-ON a new fan	Switch -On a new EC fan
2	new ADD 1	The first address proposed is the lowest
3	UP / DOWN: change ADD	UP, DOWN to change address
4	ENT: program ESC: exit	ENT, ESC

H - Switch on a new (or the following) EC fan and wait at least 10 seconds.

I - By pressing " ENTER "the selected address is programmed; if everything is correct, the screen shows the following temporary message

1		
2	Fan X programmed	EC Fan programmed with desired X address
3		
4		

And then the following message

1	Switch OFF the fan	Switch OFF the fan
2		
3	push UP to proceed	Push UP to proceed
4		

Back to step **G** and move to the next EC fan. The same procedure is repeated for all the other fans .

N.B. If during the programming phase point (**F**) the EC fan with address "1" is not found (for example because it is not powered-ON or because not enough waiting time was allowed in the stop or start phase), the following temporary message appears

1		
2	EC Fan at ADD 247	EC Fan at address "247" not found
3	not found	
4		

Before returning to point **G** on the display page and resubmitting the same address: try programming again.

L - The procedure is terminated manually by the operator by pressing the " ESCAPE " key the following page is displayed:

1	Switch ON all fans	Switch ON all EC fans
2	wait a few seconds,	wait a few seconds
3	push UP to auto-map	push UP to auto -map all fans
4	push DOWN to escape	push DOWN to escape without generating a fans map

M - By pressing the UP key the ECM controller automatically generates the fans map, avoiding the operator to perform the steps of par. 7.3 .

N - Pressing the DOWN key the procedure ends without changing the map of the fans in memory. By not pressing any buttons, the procedure ends by timeout five minutes after the last key was pressed without creating the new map of the fans.

7.6 Single Fan Manual Driving

Direct speed command of one individual EC fan at a time. When this page is opened the speed of all fans is reset to zero. Driving a single fan at a time is allowed provided that it is present in the map of the EC fans as described in par. 7.3. The set-speed is limited to the maximum defined in par 7.2.

A - Departing from point "B" of Chap. 7 the screen will display the following

1	-- Expert Mode Menu --	State of System: change parameters Expert level
2	9.5: Single Fan	Submenu 13, function **5** : **Procedure of Manual regulation of single EC fans**
3	Manual Driving	Setting and Modifying
4	ENT : select ESC : exit	Programming suggestions

B - Press the "ENTER " key and the following page appears on the screen with the current values of the emergency parameters:

1	ENT: move + & - : modify	Programming suggestions
2	fan ADD 2	Address of the first fan present in the map
3	speed rpm 0	Value of the desired speed; speed = 0 rpm
4	bus drive ON	Regulation of EC fans speed via ModBus enabled: ON

C - Press the "ENTER " key to call up the first editable heading. line 2 , highlighted by the position of " edit "

1	ENT: move + & - : modify	Programming suggestions
2	edit fan ADD 2	Use the "UP" and "DOWN" keys to read the fans present in the map
3	speed rpm 0	set the Value of the desired speed (now speed = 0 rpm)
4	bus drive 0N	Regulation of EC fans speed via ModBus enabled: ON

D - Pressing the "ENTER" key to move on to the next line 3, "speed", regulated by the UP and DOWN keys from 0 to the maximum value set for the EC fans (see par. 7.2).

1	ENT: move + & - : modify	Programming suggestions
2	fan ADD 2	Use the UP and DOWN keys to read the EC fans present in the map
3	edit speed rpm 100	Value of the desired speed; speed = 0 rpm
4	bus drive 0N	Regulation of EC fans speed via ModBus enabled: ON

The chosen fan, and only that one, begins to rotate at the set speed of 100 rpm.

E - Pressing " ENTER ", it is possible to get to line 4, "bus drive ", which can be set with UP and DOWN keys:
"ON" = enabled, the selected fan takes the speed command from the ModBus;
"OFF" = disabled , the fan takes the selected speed command from analog 0-10Vdc

F - Press the "ENTER" key to return to point "C" where it is possible to choose another EC fan and/or modify the speed. If a new address is the fan chosen starts to the set speed and the previous one stops .

G - Press the "ESCAPE" key at any time to abort the procedure in course and return to point "C" of chapter 7.

7.7 Single Address Change

The presence of two or more EC fans with the same address is not allowed

Guided procedure which allows a new address to be assigned to EC fan where the current address is already known, with the option of simultaneously assigning the same parameters to another EC fan sample in the same network.
It is also possible to assign a new address to an EC fan whereby the current address is not known, as long as it is the only EC fan connected to the network at that given moment.
The acceptable addresses for the network range from 1 to 247, please note that the machines with address 1 (default ebm-papst) are those yet to be configured.

***** ATTENTION*** Do NOT mix MODbus regulation, and make sure that all EC fans are the same Brand .**

A- Departing from point "**C**" of Chap. 7 the screen will display the following:

1	-- Expert Mode Menu --	State of System: change parameters Expert level
2	Single Address	Submenu 13, function **6** : **Procedure of ADDressing a single EC fan**
3	Change	
4	ENT : select ESC : exit	Programming suggestions

B- By pressing "ENTER" the screen will display the following page:

1	ENT:move +& - : modify	Programming suggestions
2	final ADD 0	Final Address (final ADD) : 0
3	origin ADD 0	Initial address (origin ADD) : 0
4	master ADD 0	EC sample fan (master ADD) : 0

C- By pressing "ENTER" the first editable address field line 2 is entered, highlighted by the "edit" position, set the value of final "ADD" with keys UP & DOWN value from 1 to 247 :

1	ENT : move +/- : modify	Programming suggestions
2	edit final ADD 22	Keys "UP" and "DOWN" to change the "final ADD" value
3	origin ADD 0	Initial address (origin ADD) : 0
4	master ADD 0	EC sample fan (master ADD) : 0

D- By pressing "ENTER" the next line 3 is displayed, "origin ADD", if the initial address is unknown leave this field at zero, the first EC fan found with address different than "0" shall be assigned the address "final ADD".

E- If the use of parameters of a sample EC fan are required set the address on line 4 "master ADD", if not leave on ZERO.

F- By pressing "ENTER" the value setting ends, the item "edit" disappears, by pressing UP or DOWN the following page is displayed which enables the effective programming of EC fans with the new values.

1	ENT : to start process	Programming suggestions
2	final ADD 22	Final Address (final ADD) : 22
3	origin ADD 12	Initial address (origin ADD) : 12
4	master ADD 11	EC sample fan (master ADD) : 11

G- By pressing "ENTER" programming with the new values of EC fans is run, the screen will display the following temporary message which lasts the time required to update all fans.

1	work in progress	Update in progress
2	final ADD 22	Enable / Disable the function with UP and DOWN keys
3	origin ADD 12	Emergency speed = 100 rpm
4	master ADD 11	Safety interval = 53

then it goes back to point (**B**).

H- By pressing "ESCAPE" at any time, the procedure in progress is annulled and display goes back to point (A) except in stage (G) of effective programming of EC fans, indicated in the words "work in Progress".

7.8 Auto-Addressing Procedure for ZIEHL-ABEGG EC fans

Usable only with Ziehl-Abegg EC fans

Guided procedure which allows a new address to be assigned to one or more ziehl-abegg EC fans, provided they are wired as prescribed in the manual "Ziehl-Abegg AM-MODBUS / AM-MODBUS-W, comunication Module for ECblue fans" par. 5.3 Communication

The acceptable addresses range from 1 to 246; the set value is assigned to the first ventilator of the chain (the one with ID input connected to ground), the next is assigned the same value incremented by one, and so on until the last fan of the chain. Then see diagram chap. 7.9 .

A - Departing from point "**C**" of Chap. 7 the screen will display the following:

1	-- Expert Mode Menu --	State of System: change parameters Expert level
2	Auto Adressing	Submenu 13, function **7** : **Procedure of Auto ADDressing EC fans (*)**
3		(*) Only with Ziehl-Abegg EC fans
4	ENT: select ESC: exit	Programming suggestions

B - Pressing " ESC " goes back to step A.
C - Pressing " ENTER ", if the EC fans are NOT Ziehl-Abegg the following page appears:

1		State of System: change parameters Expert level
2	Auto Adressing	Submenu 13, function **7** : **Procedure of Auto ADDressing EC fans (*)**
3	Function non Allowed	Function non Allowed : the EC fans are not Ziehl-Abegg !!
4	ENT: select ESC: exit	Programming suggestions

D - Pressing " ENTER " , if the EC fans are Ziehl -Abegg the following page appears:

1	Automatic Adressing	State of System: change parameters Expert level
2	start ADD 1	Submenu 13, function **7** : **Procedure of Auto ADDressing EC fans (*)**
3	UP/DOWN: change ADD	Only with fans EC Ziehl -Abegg
4	ENT: start ESC: exit	Programming suggestions

E - Pressing "ESC" goes back to step A.
F - Pressing "UP " increases, and " DOWN " decreases the value of the address of the first fan of the chain (pitch of 10)
G - Pressing "ENTER " the procedure activates and the following page appears:

1	**Automatic Adressing**	Procedure of auto addressing in execution
2	**in execution**	
3	please wait	
4		

H - And after a few secons the following page appears:

1		
2	Saving New Values	Saving New Values
3	Please Wait	Please Wait
4		

I- And then the displays goes back to home page.

EC FANS CONNECTION

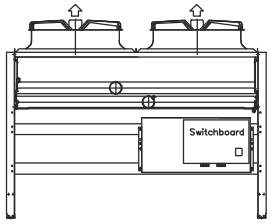

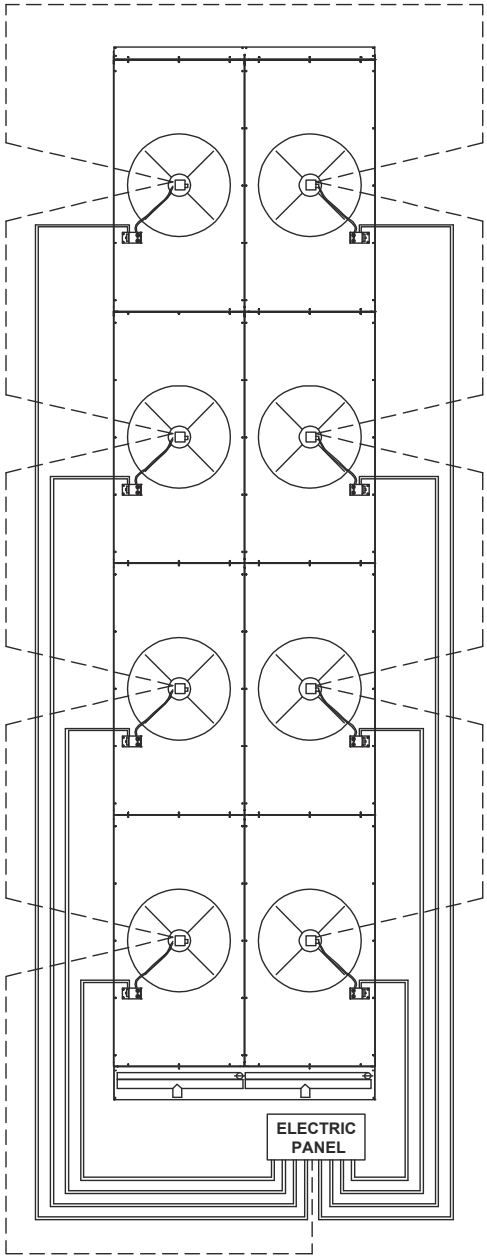

Three-phase Fans power cables

MODBUS RS-485 cable

8.0 ALARM AND WARNING MESSAGES

The ALARM messages are connected to situations which cause the arrest of regulation while on the other hand the WARNING messages are connected to anomalies which do not stop the operation.
The ALARM messages are displayed on the first line of the display only if the device is in the normal working phase.
The cause is indicated with a special message and the display starts to flash to attract the attention of the operator.
If the device is in the programming phase, no message appears; it will appear after exiting this stage.
In any case the alarm relay RL1 (see par. 2.2.6) is de-energized (see par. 2.2.6) and the DL5 LED "FAIL" lights up.

A typical display sequence during working operations could be the following:

1	---- Run ---- HH . MM	State of System: no working alarm, RTC Hours and Minutes
2	Higher Inlet Signal	Description of the selected parameter, see table pg. 16
3	In 37.0 Cels.	Initials / value and units of measurement of selected parameter
4	rtE-01	Procedures for active function

Intervention for a breakdown to one of the transducers connected to the input, the first line is updated as follows:

1	**Under Range or Open**	State of System : ALARM
2	Higher Inlet Signal	Description of the selected parameter, see table pg. 16
3	In 37.0 Cels.	Initials / value and units of measurement of selected parameter
4	rtE-01	Procedures for active function

Possible Alarm messages and relative causes are:

1	**Controller Failure**	Error in configuration parameters, try reloading the configuration
1	**Alarm: No Fans**	No fan assigned (EC Motors)
2	**The Map is cleared**	"The map is cleared" (second part of alarm message)
1	**No Answer from Fan/s**	RS485 communication with fans (EC Motors) is not possible
1	**All Fans in Error**	All fans (EC Motors) present are in error
1	**T.K. Alarm open**	Open external contact, thermal protection (TK), if SW1-3 is "OFF" see par. 3.3
		This Alarm can stops also the regulation of all other EC fans
1	**Board Overheat**	Stop for temperature of Control card > 85°C
1	**Under Range or Open**	Input signal lower than minimum value

- Input signal lower than minimum value

Value of limit lower for each configuration

rS -020	-	mA	rPr025 (*)	2.0	mA
rS -010	-	Vdc	rPr030 (*)	2.0	mA
rtE -01	-24	°C	rPr045 (*)	2.0	mA
rtE -02	-24	°C	rUu -05	-	Vdc
rPr420	2.0	mA	rPu030 (*)	-	Vdc
rPr015 (*)	2.0	mA	rUu010	-	Vdc

1	**Over Range or Short circuit**	Input signal higher than maximum value

- Input signal higher than maximum value

Value of limit higher for each configuration

rS -420	24	mA	rPr025 (*)	24	mA
rS -010	11	Vdc	rPr030 (*)	24	mA
rtE -01	+94	°C	rPr045 (*)	24	mA
rtE -02	+94	°C	rUu -05	5.5	Vdc
rPr420	24	mA	rPu030 (*)	5.5	Vdc
rPr015 (*)	24	mA	rUu010	11	Vdc

(*) Scale conversion on display

- The alarms are displayed with the same priority they were listed, the presence of an alarm with greater priority prevents display of those with lower priority.
- All the alarm conditions described are self- resetting; they are cancelled automatically when the cause is removed.

In the event of Alarm with control functions blocked, an emergency speed signal is immediately sent to the EC fans. For details see par. 7.1.

The WARNING messages are shown in the first line of the display only if the device is in the normal working phase.
The cause is indicated with a specific message.
If the device is in the programming phase no message appears, it is shown after exiting this phase.
In any case the alarm relay RL2 (see par. 2.2.6) is de-energized (see par. 2.2.6).

The possible WARNING messages and their relative causes are:

1	**TK Warning HH. MM**	Opening external contact thermal protection (TK) , if SW1-3 is in "ON"position (see par. 3.3). This Alarm does not stop the regulation of the other EC fans

1	**FAN Error HH. MM**	Presence of at least one or more EC fans, but not all, in alarm state
		For the details of individual EC fans see par. 5.3 point (C) and also possible messages (*)
		This alarm does not stop the regulation of the other EC fans

(*) Possible messages

Phase Failure
Out Stage Over T.
Comm Er Mast-Sla
Motor Over Temp
Hall Sensor Err.
Motor Locked
Electronic Over T.
DC-link Over Volt
DC-link Under V.
Mains Under Volt.
Mains Over Volt.

1	**FAN Warning HH. MM**	Presence of at least one or more EC fans in "WARNING" (W!) state
		For the details of individual EC fans see par. 5.3 point (**C**) and also possible messages (*)
		This condition does not stop the regulation of the fans

(*) Possible messages

W! Current Limit
W! Power Limit
W! Power Over T
W! Motor Over T
W! Elect. Over T
W! CDClink Under V
W! Brake Mode
W! Reserved
W! Speed < D145
W! Cable Broken
W! Heat Active

9.0 PRODUCT DISPOSAL

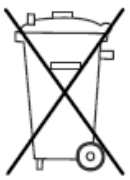

The equipment must be separately disposed in accordance with the local regulations regarding the disposal.

NOTES

ITALIANO

ENGLISH

FRANCAIS

DEUTSCH

ESPAÑOL

AWS

Instruction for: **Advanced Water Spray**

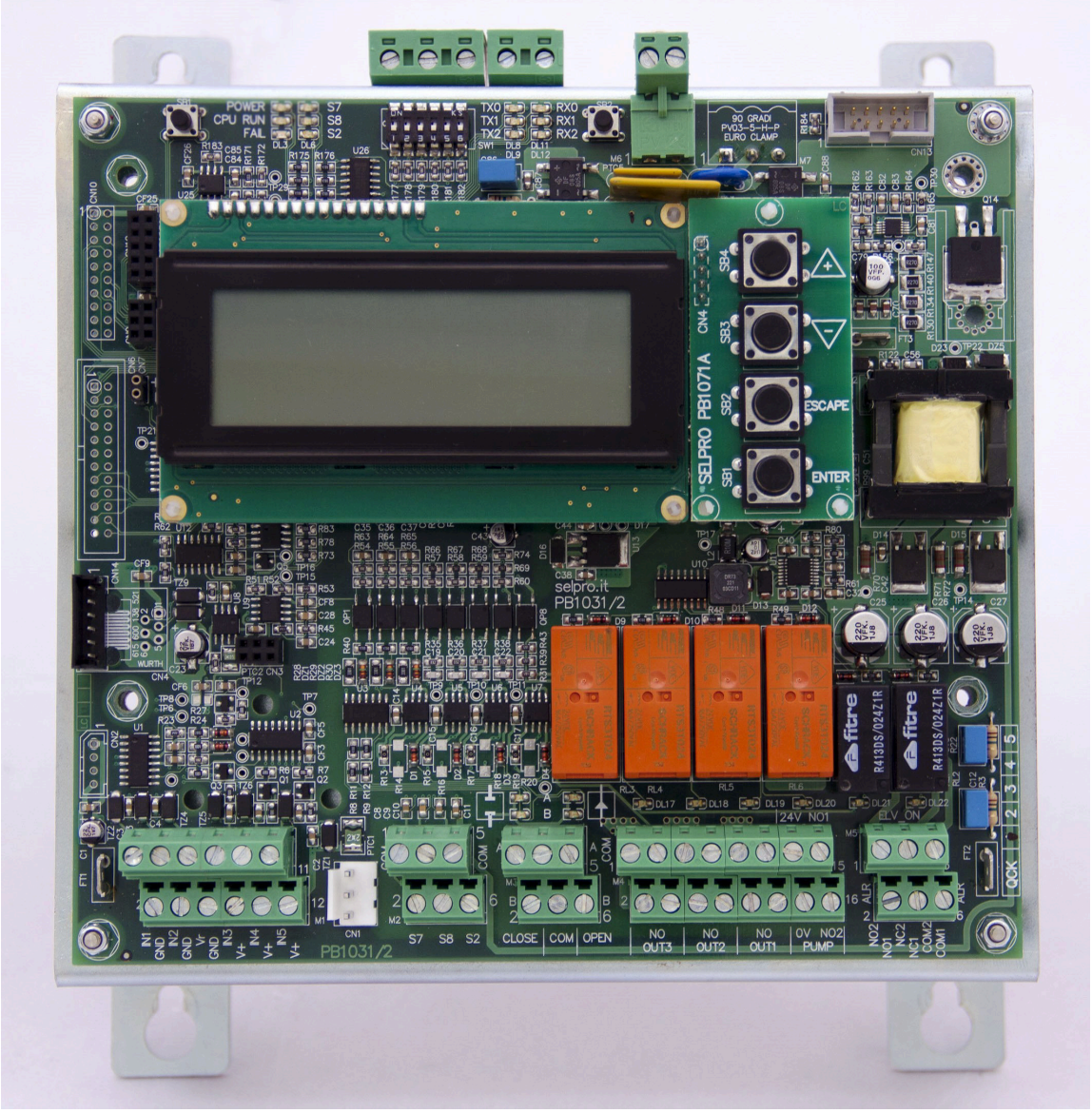

SELPRO

ITALIANO

ENGLISH

STANDARDS - The products are provided for incorporation in machines as defined in the EC. Machine Directive **2006/42/CE** and subsequent modifications.
• **PED 97/23/CE**
• Directive **2004/108/CE** and subsequent modifications. Electromagnetic compatibility.
• **Low tension** - Reference Directive **2006/95/CE**
However it is forbidden to operate our equipment in advance before the machine incorporating the products or making part thereof has been declared conforming to the EC Machine Directive.
PRECAUTIONS: Accident warning concerning possible personal injury or equipmentdamage due to inattention to the instructions.
A) For moving, installing and maintenance operations it is obligatory to:
1 - Employ authorized personnel only for using moving equipment (cranes, forklift elevators, etc.).
2 - Wear work gloves.
3 - Never stop below a suspended load.
B) Before proceeding with the electrical wiring it is obligatory to:
1 - Employ only authorized personnel
2 - Make sure the power line circuit is open
3 - Make sure the main switch on the general power panel is open and padlocked in this position.
C) Before proceeding with the collector/distributor connections it is obligatory to:
1 - Employ only authorized personnel
2 - Make sure the supply circuit is closed (no pressure).
3 - When performing welding operations, make sure the flame is not aimed toward the equipment (insert a shield if required).
D) DISPOSAL: SELPRO products are made of:
Plastic materials: polyethylene, ABS, rubber.
Ferrous materials: iron, stainless steel, copper, aluminium (possibly treated).
Refrigerant liquids: follow the instructions relevant to the equipment installation.

FRANCAIS

DEUTSCH

ESPAÑOL

ENGLISH

PREMISE

The AWS controller regulates the spray systems. It can be supplied in two versions :

1) For machines equipped with EC motors ;
electric-pannel-board in combination with ECM controller

AWM (ECM + AWS) for Electric Panel

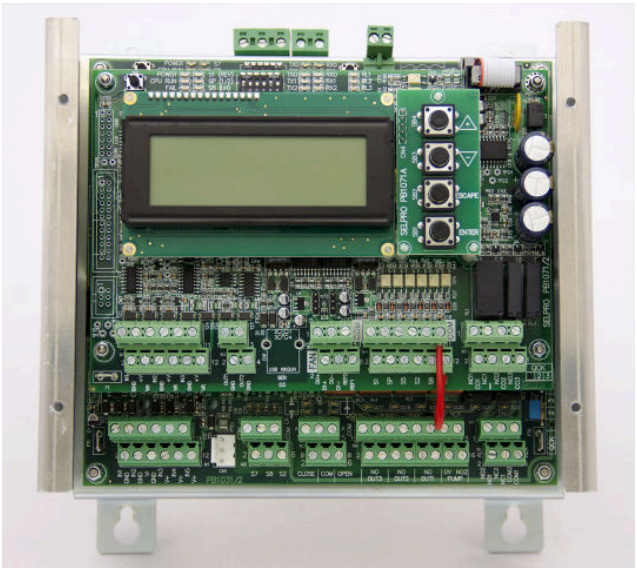

2) For others configuration the controller AWM
is inserted in IP 55 box

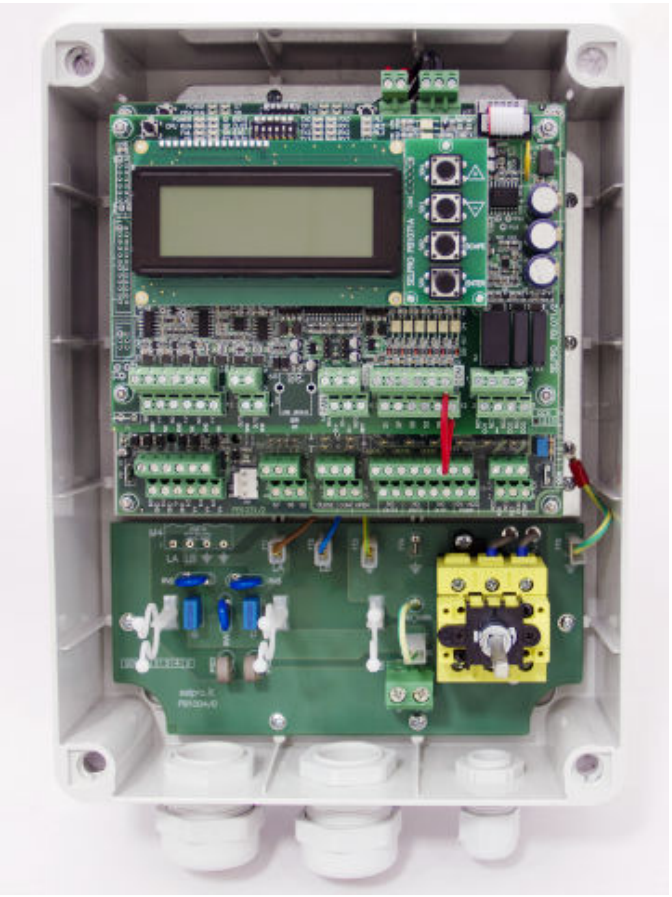

INDEX

Par.	Description	Page
I	PRESENTATION AWM (Air-Water-Manager) Controller	5
II	ARRANGEMENT OF CONNECTION, DISPLAY AND COMMAND PARTS AWM	6
III	INSTALLATION AND ELECTRICAL CONNECTION AWM	7
	ISTALLATION	7
	POWER SUPPLY VOLTAGE	7
	CONNECTION OF SENSORE AND COMMAND SIGNALS	7
IV	SELECTION OF AWM	8
V	RECALL AWM DEFAULT CONFIGURATIONS	8
	SAFETY REGULATIONS	9
1.0	INTRODUCTION	10
1.1	OVERVIEW	10
1.2	TECHNICAL SPECIFICATIONS	11
1.3	MECHANICAL MEASUREMENTS	14
	1.3.1 IP 00 ELECTRICAL PANELS INTERNAL VERSION	14
	1.3.2 IP 55 EXTERNAL VERSION	15
1.4	ARRANGEMENT OF CONNECTION, DISPLAY AND COMMAND PARTS	16
2.0	QUICK GUIDE FOR FIRST TIME START UP	19

ENGLISH

Par.	Description	Page
3.0	**INSTALLATION AND ELECTRICAL CONNECTIONS**	**21**
3.1	INSTALLATION	21
3.2	POWER SUPPLY CONNECTION	21
	3.2.1 VERSION IP 00 FOR MONOPHASE 400V - 50/60 Hz, VOLTAGE SUPPLY	21
	3.2.2 VERSION IP 55 FOR MONOPHASE 400V - 50/60 Hz, VOLTAGE SUPPLY	22
3.3	CONNECTION OF SENSORS AND COMMAND SIGNALS	22
	3.3.1 M1 : ANALOG INPUTS	22
	3.3.2 M2 : ON/OFF LOGIC INPUTS	24
	3.3.3 CONNECTION OF COMMAND SIGNAL FROM RGM/AURT	25
	3.3.4 CONNECTION OF COMMAND SIGNAL FROM ECM/ WMC2, DSV/ARUS	25
	3.3.5 M3: COMMAND OUTPUTS FOR MOTORIZED MODULATING VALVES	25
	3.3.6 M4: COMMAND OUTPUTS FOR OPEN/CLOSE MOTORIZED VALVES	28
	3.3.7 M5: RL1 AND RL2 SERVICE RELAY	33
	3.3.8 OPTIONAL MODULE FOR SERIAL RS485 (MODBUS)	34
4.0	**DISPLAY AND COMMAND DEVICES**	**36**
4.1	DISPLAY AND PUSH - BUTTONS	36
4.2	ADJUSTMENT OF DISPLAY CONTRAST	37
4.3	CONFIGURATION DIP - SWITCH : SW1	37
4.4	MANUAL ACTIVATION OF TOTAL DRAINING	37
4.5	WARNING LEDS	38
5.0	**FUNCTION MODE**	**39**
5.1	ACTIVATION CONDITIONS	39
5.2	SUPPLY WITH OPEN/CLOSED ELECTROVALVES	39
5.3	SUPPLY WITH MODULATING VALVES	41
5.4	DRAINING WATER FROM UNIT	43
6.0	**PARAMETERS**	**44**
6.1	LIST OF PARAMETERS	44
6.2	VALUES OF MEASURES QUANTITIES AND PARAMETERS	45
	6.2.1. MEASURES QUANTITIES	45
	6.2.2 PARAMETERS	45
6.3	FUNCTION PARAMETERS	46
	6.3.1 DEFAULT CONFIGURATIONS	46
	6.3.2 RECALL OF DEFAULT CONFIGURATION	47
6.4	DISPLAY OF PARAMETERS	48
6.5	CHANGE PARAMETERS	49
	6.5.1 “SPRAY PARAMETERS”	49
	6.5.2 “SET UP PARAMETERS”	51
	6.5.3 “POGRAMMABLE ALARMS”	52
	6.5.4 “PID PARAMETERS”	54
	6.5.5 “MODBUS PARAMETERS”	55
	6.5.6 “REAL TIME CLOCK”	56
7.0	**MANUAL COMMAND OUTPUTS**	**57**
8.0	**ALARM AND ATTENTION MESSAGES**	**58**
9.0	**PRODUCT DISPOSAL**	**59**

AWM Air-Water-Manager

ENGLISH

The ECM + AWS controllers became the AWM digital processor used for DRY & SPRAY appliances.
Designed to regulate the battery speed of fans with EC motors and to control simultaneously, and in a coordinated manner, the optimum amount of spray water .

AWM consists of two units already known: ECM and AWS, which share the display and four buttons.

N.B. In order to manage the ECM + AWS controller it is essential to know the ECM and AWS users manuals.

The EC Motors regulation section has the same functionality of the ECM controller, it uses the signals from the three programmable analog Inputs in :

- Voltage (V),
- Current (mA)
- Resistance (ohm), for NTC probe (10kohm@25°C)

suitable to read the signals produced by transducers of Temperature (° C) Pressure (bar) Flow rate (mc), etc .
The possible adjustments can be of the following types:

- P (proportional)
- PID (proportional, integral, derivative).

  PID (proportional, integral, derivative) with AUTO - Tuning system.

The EC Motors command can be via 0-10Vdc analog signal, or via RS-485 with Modbus protocol (RTU std.)

The section for controlling the spray has the same functionality of the AWS controller and uses the signals coming from four analog inputs in current (mA) or resistance (ohms), suitable to read the signals produced by transducers of Pressure (bar) or Temperature (° C).

There are two modes for adjusting the amount of water delivered by the nozzles:

- One, two or three valves command Open / Close (solenoid valves or motorized valves); each valve supplies one, two or three ramps of nozzles that work in all / nothing mode.
- One or two modulating two-ways valves command, that regulate the water flow to the nozzles, by dosing the amount of water supplied to maintain the set point. The use of one or two valves depends on the water supply pressure: up to 8 bar is simply a valve, more than 8 bar, and up to 16 bar, it is necessary to use two valves placed in series.

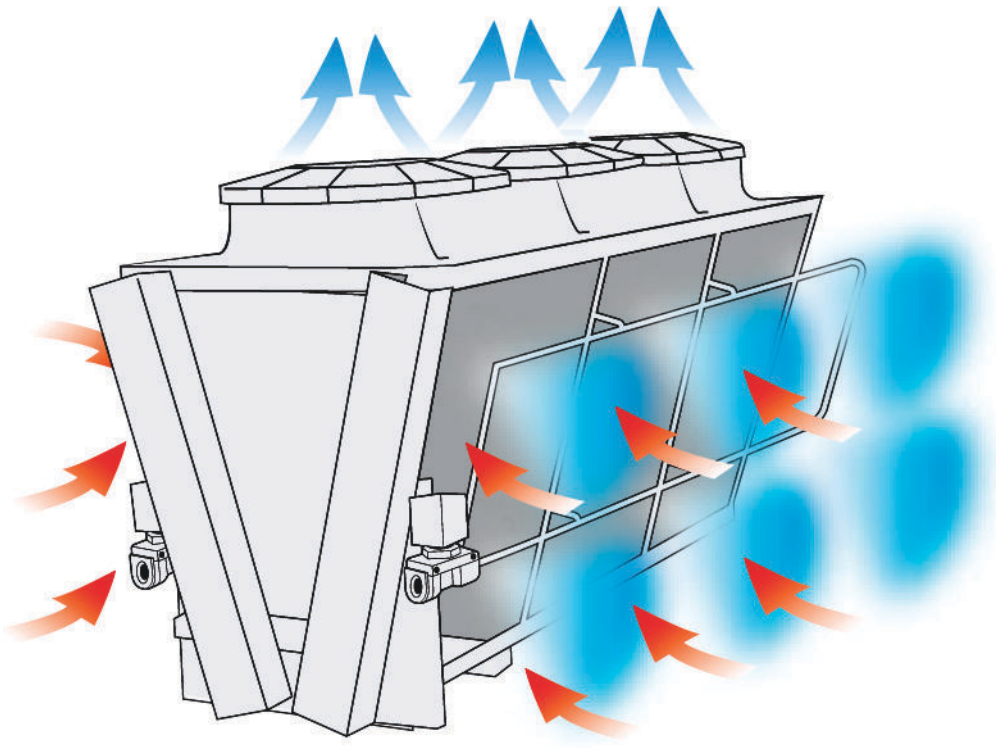

AWM COMPONENTS ARRANGEMENT

Fixing box, protected with iron case

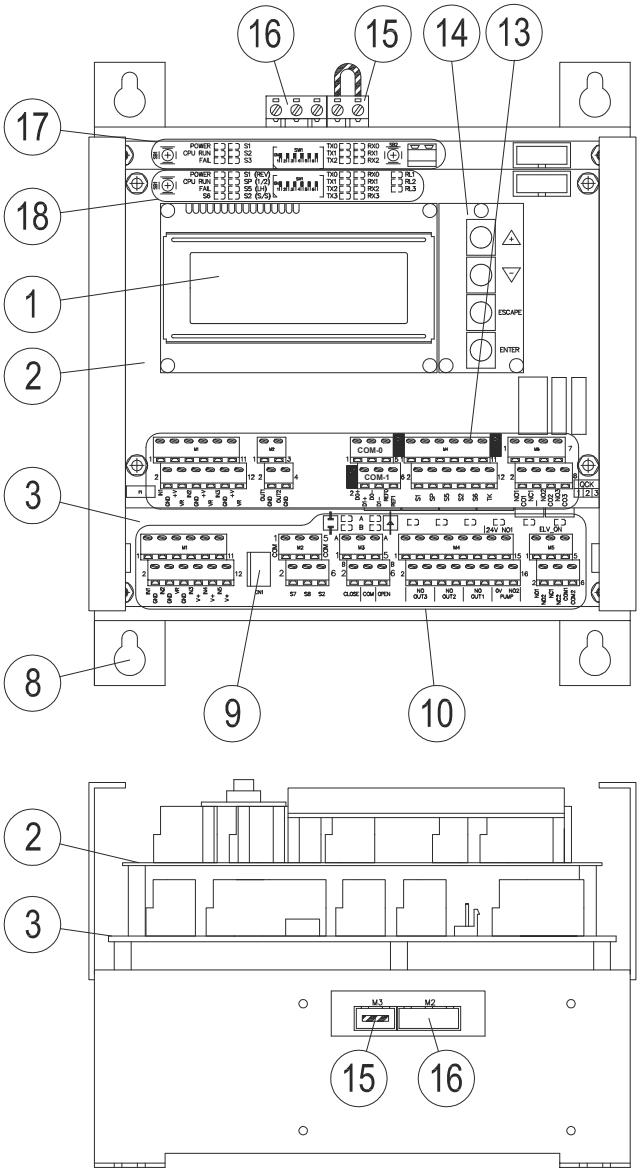

IP55 in GW® plast CABINET

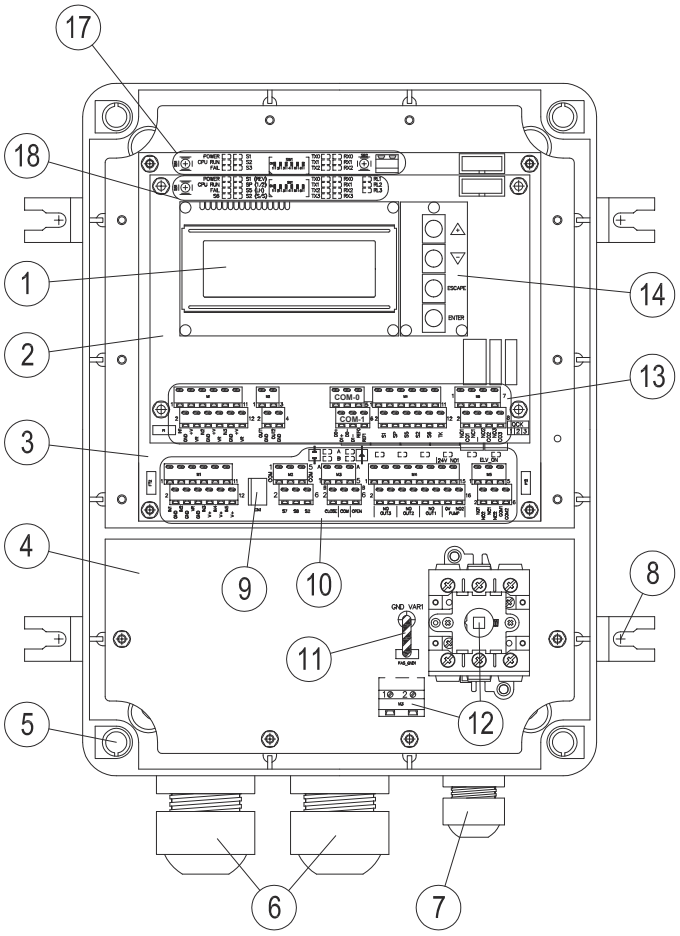

1	Backlit LCD Display , 4 alphanumeric lines with 20 characters
2	Upper board : management of fans with EC motors (PB1071) ECM
3	Lower board : spray management (PB1031) AWS
4	Power board with single phase input (PB1004)
5	Holes for clamping screws sealable for lid closure
6	Multi-hole M32 cable gland with 8 holes Ø5,0mm
7	M20 cable gland for tightening Ø10,0mm to Ø17,0mm cables
8	External support brackets for wall mounting
9	CN1 Connector for linking external button for the manual drain command
10	Lower board: cable connectors ,signals and relay status LEDs for spray management - AWS
11	Bridge with Faston for opening varistors circuit (insulation test)
12	Main switch and connection terminals for power and grounding
13	Upper board cable connectors EC fan motors management signals - ECM
14	UP(+) / DOWN (-) / ESCAPE / ENTER Buttons plug PB1071A)
15	Connection terminals with bridge for varistors circuit opening (insulation test)
16	Connection terminals power supply and protective ground
17	Lower board: service buttons, monitoring led, Dip -Switch predispositions - AWS
18	Upper board: reset button (SB1),monitoring led, Dip -Switch predispositions - ECM

AWM INSTALLATION and ELECTRICAL CONNECTION

Installation

Install the unit in places with a temperature range between -20 ° C and +50 ° C, otherwise it will seriously compromise the functioning and integrity of the unit itself. For more details see chapter 3 of the AWS instructions.

Power Connection

The AWM controller is designed for 20/24VAC~ or 230 to 400 V~ +20%/-10% 50/60Hz
For more details see chapter 3 of the AWS instructions.

Connecting Sensors and Command Signals

The AWM controller is provided for direct connection of sensors, signals and auxiliary contact supporting the adjustment.
The connection terminal blocks are located on two separate floors, dedicated to the two functions carried out from the unit

☒ Upper Board : signals dedicated to control EC Motors fans - ECM

☒ Lower Board : signals dedicated to Spray control - AWS

The figure below shows a breakdown of the terminal connection present on the two boards. For more details see ECM and AWS instructions

M1	Analog transductors and Command signals
M2	0-10V Outputs, Analog peripherals
M3	Isolated RS -485 COM0 and COM1 Serial Links
M4	Logic inputs ON -OFF
M5	RL1 , RL2 , RL3 Relays

UPPER BOARD: ECM

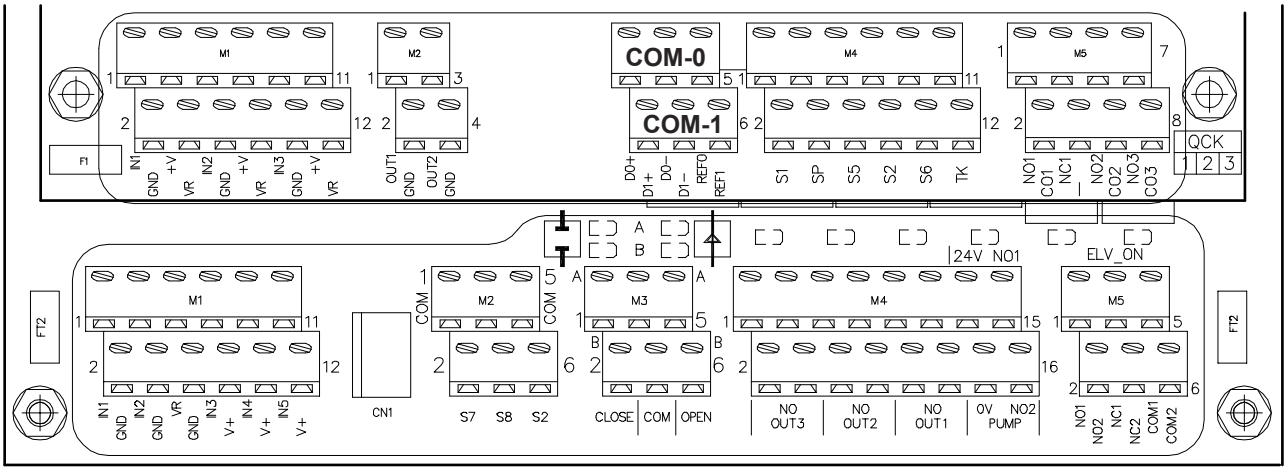

LOWER BOARD: AWS

M1	Analogic Inputs
M2	Logic Inputs ON -OFF
M3	Command Outputs Motorized Modulating Valves
M4	Command Outputs Valves Open/Close and Plant Power Supply
M5	Service Relays

AWM FUNCTIONS SELECTION

A - By switching on the LCD screen for a few seconds the display shows the following page:

1		Mon -Fri AWM rel. X. xx		Manufacturer Name - Controller Model - Software Release X/Y
2		EC Fans & Spray		Overview of firmware installed
3		Manager & Controller		
4		PID & MODBUS inside		

B - Soon after comes the home page corresponding to the prearranged configuration for EC Motors command, for more details see chapter 3 and followings for ECM instructions.

C - If the unit is configured to manage fans via the 0 -10V COM-1 analog output by pressing the key "ENTER" you can directly access the functions of the spray section (AWS), for more details see chapter 4 and followings for AWS instructions.

D - Instead, if the unit is configured to handle the EC motors fans via the serial COM-1, by pressing "ENTER" the following menu choices appears:

1		---- XXXX --- HH . MM		System Status: no alarm working, Hours and Minutes RTC
2		UP to view fans		Function key " UP "
3		DOWN to view spray		Function key " DOWN "
4		ESC to abort		By pressing " ESC " you go back to " B "

E - By pressing " UP " an examination of the status of the individual EC motors starts. For more details see par. 5.3 e 5.4 of the ECM instructions.

F - By pressing " DOWN " the display passes to the spray sect. functions and the AWS home page is displayed, for more details see chapter 4 and followings for AWS instructions.

AWM DEFAULT CONFIGURATION RECALL

The following procedure allows to change the default configuration of the AWS section.
The available configuration are described in section 6 of the AWS instructions.

A - Enter the spray sect. functions (AWS) by using the procedure described in the previous chapter. 4.
B - The display shows one of the pages described in section 4.1 of the AWS manual.
C - Simultaneously press the "UP" and "ENTER" key, on the display appears:

1		----- Operation Mode -----		System Status: Change of the work configuration
2		--- Now ---		
3		Available		
4		ENT : select ESC : exit		"ENTER" key : select, "ESCAPE" key : exit and go back to home page

D - Releasing the " UP " and " ENTER " keys, a message appers on the display corresponding to the actual configuration :

1		----- Operation Mode -----		System Status: Change of the work configuration
2		S.Type 20 Relay 2		Actual configuration initials: as shown in the table in par. 6.3.1 of (2)
3		IN3 = 25 bar		Full scale pressure transducer used on IN3 (supply)
4		ENT : select ESC : exit		"ENTER" key : select, "ESCAPE" key : exit and go back to home page

E - With the "UP" and "DOWN" keys, you can scroll across the display lines N°2 and N°3 of the available operating modes, see par. 6.3.1

F - Once the desired configuration has been identified, pressing "ENTER" the display shows the following:

1		----- Operation Mode -----		System Status: Change of the work configuration
2		S.Type 50 V. Mod 2		Actual configuration initials: as shown in the table in par. 6.3.1
3		I3=25 I4=25 I5=25 bar		Full scale pressure transducer used
4		ENT+ESC : save		Press the keys "ENTER" + "ESCAPE" to have the new configuration

G - To exit without making any changes, press the ESCAPE key, to go back to step (B).

H - To confirm your choice, press the keys ENTER + ESCAPE: on the dispaly, at line N° 4, the message "Updating, please wait" appear. The selected configuration is saved and used immediately, replacing the previous one.

The procedure is completed, return to step (B)

AWS

STAND ALON DIGITAL CONTROLLER

ENGLISH

ATTENTION :

A qualified operator should install the device and carefully connect the electrical circuit, securing the flexible cables to their final position, then start it up.
As any improper installation of the AWS controller could cause damage to items or persons, please follow the instructions in this manual and any current safety regulations.
Installation should be in compliance with the end use expected and the device should undergo maintenance where required, in a suitable manner, protecting the safety of people, pets and material goods.
After receiving the AWS device, check that the packaging is intact; if you find any damage which can be attributed to transport, it should be immediately reported to the carrier or within the legal timeframe.
The buyer shall ensure in advance that the product is suitable for its intended use, taking any consequent risk and responsibility.
The AWS device has been planned to control spray equipment, based on a command signal with a 1-10V voltage. The device was built for industrial use and hence complies to standards for industrial environments.
The device should not be used for purposes other than the aforesaid.

No responsibility will be taken for any accidents, loss or damage incurred by not observing these instruction.

- ***We shall not be held liable for any errors in catalogues, publications or other written documentation; the information in this manual is not binding and we reserve the right to make any changes we deem necessary for production purposes or to improve function and performance levels to our products at any given moment without forewarning.***

SAFETY REGULATIONS

This device has been designed to offer the best and safest functioning provided it is used and installed by trained staff in a suitable electrical environment.
When installing the controller especially make sure to:

- Carefully follow instructions in this manual and observe current safety measures
- DO NOT tamper with and DO NOT disassemble the internal components of the AWS device; if this is done warranty shall be void and damage can be incurred. The controller does not contain components which can be directly repaired by the user.
- The AWS device shall be equipped with an effective grounding; the installer should make sure that grounding is made based on current standards and laws.
- The user should be protected from electric current; the adjusted devices should be equipped with protection against any overloads in compliance with current laws.
- DO NOT power the AWS device without the protection cover and in no instance touch the electrical parts of the circuit when power is on.
- Reassemble and always check that the external protection cover is perfectly closed.

DO NOT alter or damage the adhesive identification labels of the equipment.

Before proceeding with installation, we kindly invite you to carefully read this manual where the required procedures for the proper start-up of the AWS device are explained

DESCRIPTION OF SIGNS USED IN THE MANUAL

	!Attention!
	Important information
CE EMC LVD	In compliance with: CE marking, Electromagnetic Emissions, Low Voltage
Factory Default	**The specifications highlighted are set to factory** STANDARDS
	PRODUCT Disposal

1.0 PRESENTATION

The AWS controller is a digital unit with microprocessor created to best regulate the quantity of water nebulized with the "Water Spray System" and "Dry and Spray" devices. It is controlled through the 1-10 V analog signal "spray," set off by controllers RGM/AURT, DSV/RUS or ECM/WMC2.

The adjustment of the water flow can be made in steps by using Open/Closed valves (electrovalves or motorized valves), or by using measured dosages through modulating valves.

1.1 OVERVIEW

The AWS controller commands the modulating valves, the Open/Closed electrovalves and the meter of the motor-driven pump simultaneously and in a coordinated way, using the signals coming from the four analog inputs in voltage (Vdc), current (mA) or resistance (ohm), adapted to read the signals produced by Pressure (bar) or Temperature (°C) transducers.

Two functioning procedures are available to regulate the quantity of water supplied from the nozzles:

Command of one, two or three Open/Closed Valves (electrovalves or motorized valves), each valve feeds one or two spray tubing ramps of nozzles which function in all/nothing mode.

Command of one or two modulating two-way valves, regulate the flow of water to the nozzles, by dosing the quantity of water supplied to maintain the Set Point. The employment of one or two valves depends on the pressure inflow of the water: one valve is sufficient up to 8 bar, over 8 bar, and up to 16 bar, it is important to use two valves placed in series.

A command output is also available to enable power supply for the installation, for example through a pump which is activated (ON) once the first motorized valve is opened, or the first spray tubing ramp, and deactivated (OFF) when they are completely switched off.

At the same time, the electronic time counter is set and cannot be zeroed; it can record up to 99,999.9 h of operation.

The device has the following analog inputs:

N°1 x Input for command signal 1-10 V;

N°1 x Input for ambient temperature sensor for anti-ice protection and Dry/Wet switch;

N°3 x Inputs for pressure transducers to read supply pressures (line), outlet towards nozzles and median (only used with two modulating valves).

In the case of an integrated WMC2 + AWS solution, from the Modbus part you can read also the parameters of AWS. On the other hand, in the case of AWS supplied separately, a plug card with a half-duplex RS-485 isolated serial line is available, managed by the MODBUS (RTU) SLAVE protocol for the optional connection to the external supervising system.

The specifications of parameters are described in the document "Description Modbus RTU for AWS"

Further details on specifications of the Modbus protocol are available at the website "modbus.org," the following documents have been especially used and are to be considered fully applicable:

Modbus Over Serial Line , Specification & Implementation Guide V1.0;

Modbus Application Protocol Specification V1.1

A special control and supervision "PC host" software called "Clima-Sinergy" is available and can communicate with one or more AWS slave units .

Device with 3 motorized valves Open/Closed/Drain

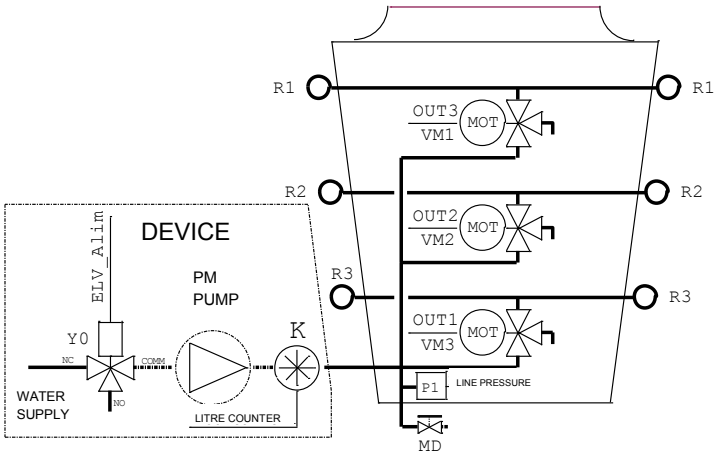

Device with 2 two-way modulating valves for supply pressure up to 16 bar

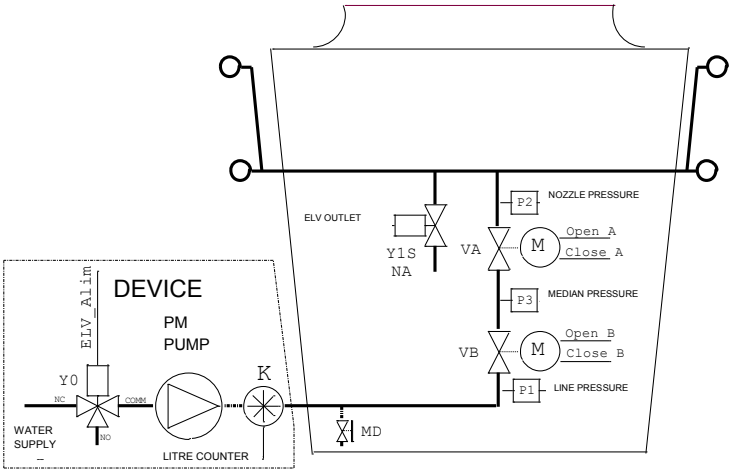

P1	Line pressure transducer, measures the supply pressure to the spray plant
P2	Nozzle pressure transducer, measures the supply pressure to the nozzles
P3	Median pressure transducer, measures the pressure between the two valves
VM1	Motorized Valve Open/Close intake /outlet step R1
VM2	Motorized Valve Open/Close intake /outlet step R2
VM3	Motorized Valve Open/Close intake/outlet step R3
VA	Two-way Modulating Valve "B:" median pressure adjustment
VB	Tap for total draining, operated manually by the user
MD	Pump (optional)
PM	Supply Electrovalve hydraulic spray plant (NC) / Drain(NO) (optional)
Y0	Litre counter with impulse outlet (optional)
K	Conta litri con uscita ad impulsi (opzionale)

1.2 TECHNICAL SPECIFICATIONS

POWER SUPPLY	Voltage	Single phase from 400 V~ +/-10% (50/60 Hz)
	Protection from overvoltages	For Installation Category **II** (**4 kV**)
CAPACITY	Command circuits	Total 150VA : 100VA for command of valves , 50VA for service circuits
MAIN FUNCTIONALITY	Regulation of Supply to Spray Nozzles	Through **IN1** input, it receives the command in voltage 1-10 V from a RGM/AURT, DSV/ RUS or ECM/WMC2 controller: IN mode "**Dry**" it completely closes the intake of the nozzles, switches off the pump, activates the drainage valve/s. **With Open/Close valves** in "**Wet Work** " mode: commands in sequence, with the increase and decrease of the signal to input IN1, 3 relays for the valves and 1 relay for the supply to the spray device and/or pump. **With modulating valves (Opens/Stops/Closes)** in "**Wet Work**" mode, it adjusts the pressure **Po** of the nozzle supply based on the IN1 input signal, with Open or Close commands, the modulating valve/s, pilots 1 relay for powering the spray device and/ or the pump.The outlet pressure to the nozzles is read via the **P2** pressure transducer connected to input **IN4**.
	Draining Water from Unit	The device has been set up for the following mode for draining the spray tubing ramps and the entire device. The different options can be used based on the configurations available in the hydraulic installation: **Total draining of the installation at end of season,** can be activated through one of the modalities described at **par. 4.4**, causes all the inlet valves to open for an amount of time determined by the **T Drain** parameter (see **chap.6**) . **Automatic drainage: Timed draining of the spray tubing ramps**, closure of the inlet valves and opening of the outlet valves with frequency chosen by the operator. Electrical connections shall be made as described in paragraphs 3.3.5 , 3.3.6.5 And 3.3.6.6, 3.3.6.7 and 3.3.6.8. N.B. With 3 spray tubing ramps and 3 Open/Close Valves, this function is available as an alternative to the command for supplying the spray and/or pump equipment. **N.B. This function IS NOT AVAILABLE with 3 x Open/Close Valves and 3 x spray tubing ramps** **Draining the spray tubing ramps at the end of each supply**, opening of the outlet valves after each closure of the ramp supply. Electrical connections shall be made as described in paragraphs 3.3.5 and 3.3.6 (excluding par 3.3.6.5 and 3.3.6.6) .
	Surveillance of command input	checks that the voltage of the command input **IN1** is always between 1 V And 11 V controlling connection with the command device If it is <1 V or >11 V an alarm signal will be set off (see chap. 5 and chap.7).
	Surveillance of Ambient Temperature	Through input IN2 connected to an STE sensor STE - NTC 10 kohm @ 25 °C: two thresholds of adjustable temperature are available (hysteresis +/-0.5°C) Anti-icing Temperature adjustable from 2 to 12 °C (Default 8 °C). If the temperature is below the value set, an alarm signal goes off. Dry/Wet Temperature: adjustable from 10 to 40 °C (Default 27 °C) design temperature DRY function. If the temperature is lower than the set value it enables the "Dry" function, if higher, the "Wet" function
	Surveillance of Line pressure	Through input IN3 connected to pressure transducer 4-20 mA (with suitable F.S. pressure) input 24 V. Two pressure thresholds which can be adjusted are available (Design pressure: Can be set from 0 to the maximum allowed by the transducer, if the pressure is lower than 85% of the set value, an alarm goes off. Spray Stop: adjustable from 0 to 100% of the value of the design pressure. If the pressure is lower than the set value it stops the function of the sprays.
	Hour timer	From 0 to 99,999.9 h: it cannot be zeroed, to count the overall time of spray activation.
	Flow gauge	Expressed in litres per minute, it shows the instantaneous water flow absorbed by the spray unit (optional).

INPUT SIGNALS

Inputs for analog signals

The device has been set up to function with the following input signals:

	Input Signal	Ri: Input Resistence		N°, Type Valves
IN 1	1 – 10 V	10 kohm	Command Input	all
IN 2	NTC	-	Ambient temperature	all
IN 3	4 – 20 mA	100 ohm	Line Pressure	all
IN 4	4 – 20 mA	100 ohm	Nozzle Pressure	1.2 V. Modul.
IN 5	4 – 20 mA	100 ohm	Intermediate pressure	2 V. Modul

Inputs for ON/OFF (logic) contacts

S7	Manual drainage command Input
S8	Litre counter impulse Input
S2	Start/Stop command Input

SERIAL LINE

Serial line RS485

OPTIONAL

Serial line RS485 isolated: dedicated to the **"PC Host"** connection, managed with ModBus RTU protocol in "SLAVE" mode, further details at PAR. 3.3.8.

ALARMS

Input Alarm	Input Alarm IN1 lower than 1 V or higher than 11 V.
Ice Alarm	Ambient temperature lower than set minimum.
Pres Alarm	Line pressure lower than 85% of the design value.
Transducer Alarm	Signal at the transducer input (IN2….IN5) beyond the dynamics allowed.
Power Elv	Lack of voltage supply to the electrovalves.

MANUAL COMMANDS

Main switch	**IG:** ON/OFF switch on the external panel; allows to activate or exclude the function (only version **IP55**).
Manual Outlet command	**SB1:** Internal push-button with replica on the external panel (**only version IP55**): allows the installation to be discharged at end of season.

OUTPUT SIGNALS

Transducer supply	3 Outputs **+22V Vdc ±10%, 40 mA** not stabilized, with short circuit protection.
Potentiometer Sensor supply	1 Output **+10 Vdc** stabilized with protection, for potentiometer input, remote manual command
Relè RL1	Contact **NO** 5 A 250 V~, 30 Vdc / NC 3**AMP** A 250 V~, 30 Vdc, alarm signal.
Relè RL2	Contact **NO** 5 A 250 V~, 30 Vdc, intake consent (pump /electrovalve).

POWER OUTPUTS

Command pump	1 relay **NO** 16 A 250 V~, contact free from range rate (with possibility of using the local 24 V~ supply of the electrovalves)	
Command of electrovalves ON/OFF	3 relays NO from 16A 250V~ powered as follows	
	Voltage	24 V~
	Power	100 VA
Command Motorized valves Modulators	2 pairs of static outputs protected by a 24 Vdc / 500 mA max short circuit.	
	Voltage	24 Vdc
	Power	10 VA

DISPLAY AND KEYBOARD	**Display**		Backlit monochromatic LCD display with 4 lines and 20 characters per line.	
	Keyboard		Four keys with these functions: UP (+) – DOWN (-) – ESCAPE – ENTER.	
LED INDICATING WARNING	**DL1**	**Power**	green	Presence service supply to logic card.
	DL2	**Cpu Run**	green	Intermittent flashing: Microcontroller logic card working .
	DL3	**Fail**	red	Presence of one or more alarms (See Chap.7).
	DL4	**S7**	yellow	State input manual drainage command.
	DL5	**S8**	yellow	State input litre counter.
	DL6	**S2**	yellow	Presence running allowed, lit = Start.
	DL7	**TX0**	yellow	Serial 0, presence output data.
	DL8	**TX1**	yellow	Serial 1, presence output data.
	DL9	**TX2**	yellow	Serial 2, presence output data.
	DL10	**RX0**	yellow	Serial 0, presence input data.
	DL11	**RX1**	yellow	Serial 1, presence input data.
	DL12	**RX2**	yellow	Serial 2, presence input data.
	DL13	**A open**	yellow	Command OPEN for “A” modulating valve.
	DL14	**B open**	yellow	OPEN Command for “B” modulating valve.
	DL15	**A close**	yellow	Command CLOSE for “A” modulating valve.
	DL16	**B close**	yellow	Command CLOSE for “B” modulating valve.
	DL17	**Out_3/Drain**	green	State relay RL3 (lit if RL3 = ON = energized).
	DL18	**Out_2**	green	State relay RL4 (lit if RL4 = ON = energized).
	DL19	**Out_1**	green	State relay RL5 (lit if RL5 = ON = energized).
	DL20	**Pump**	green	State relay RL6 (lit if RL6 = ON = energized).
	DL21	**OK (No Allarm)**	green	State of Relay RL1 (lit if RL1 = ON = energized).
	DL22	**Elv On**	green	State relay RL2 (lit if RL2 = ON = energized).
PROTECTIONS	**Protection from overvoltages**			In compliance with **EN 61000-4-5**: overvoltage category **II** (**4 KV**).
CONTAINER (ONLY VERSION IP55)	**Materials**			**GW-Plast 120°C** (max. temperature 120°C).
	Lock screws			**TPN** series with lock couple (in compliance with **CEI 23-58**) of max. **2.5 Nm**.
	Protection degree			**IP 55**
	Environmental pollution			Strong pollution
	Mechanical resistance to shock			IK Degree = 08
	Resistance to fire			Category **D**
	Size and Weight			**253 x 196 x 107 mm** **1.5 Kg**
INSULATION	**Cabinet**			Class **- I -** (use of the grounded protection) .
	Command circuits			**4000 V** between command input and power voltage parts.
WORK ENVIRONMENT CONDITIONS	**Work temperature**			**-20 T 50** (from –20°C to + 50°C) per temperature < -10°C use **S2** (stand-by adjustment).
	Storage temperature			**-30 T 85** (from –30 °C to + 85 °C).
	Vibrations			Lower than 1G (9.8 m/s^2).
ASSEMBLY	**Securing**			Vertical wall mount with N° 4 Ø5 mm (IP00) or Ø6 MM (IP55)
ELECTRICAL WIRING	**Signal**			Terminal strips for flexible cable **0.14 to 1.5 mm^2 / 26-16 AWG C section**.
	Electricity supply			Terminal strips for flexible cable **0.5 to 10 mm^2 / 20-6 AWG C section**.
TECHNICAL SPECIFICATIONS PROTECTIONS	**Directive 2006/42/EEC** **Directive 2006/95/EEC**			**CEI EN 60204-1**: Machine Safety
	Directive 2004/108/EEC			**CEI EN 61800-3**: Electric operations at variable speeds. Part 3: compatibility requisites electromagnetic and special testing methods

1.3 MECHANICAL MEASUREMENTS

1.3.1 IP00 electrical panel internal version

MODEL	A	B	C	D	E	F	∅ Fixing screws
AWS IP00	194	167	136,5	221	198	165	∅ 5,0

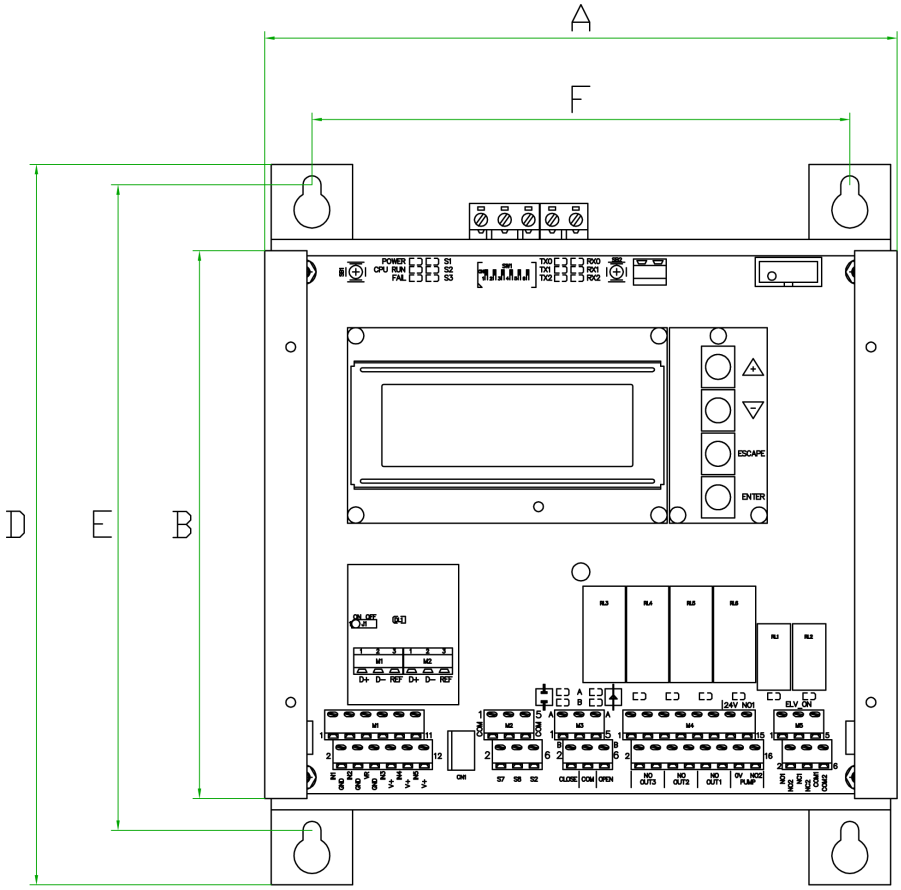

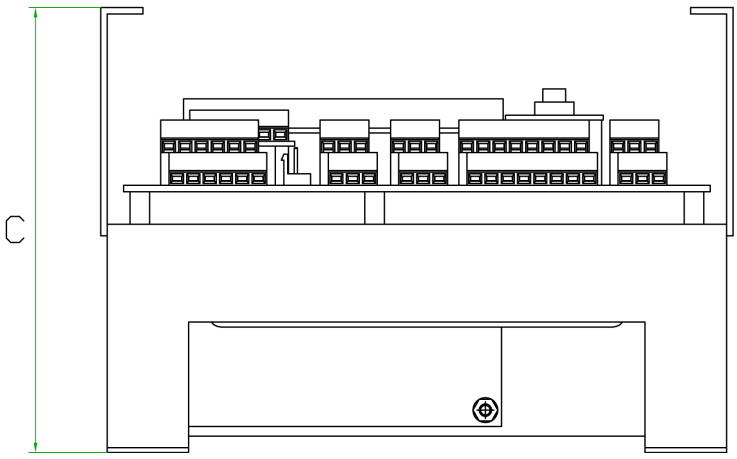

1.3.2 IP55 external version

MODEL	A	B	C	D	E	F	G	∅ Fixing screws
AWS IP55	235	315	125	283	255	185	169	∅ 6

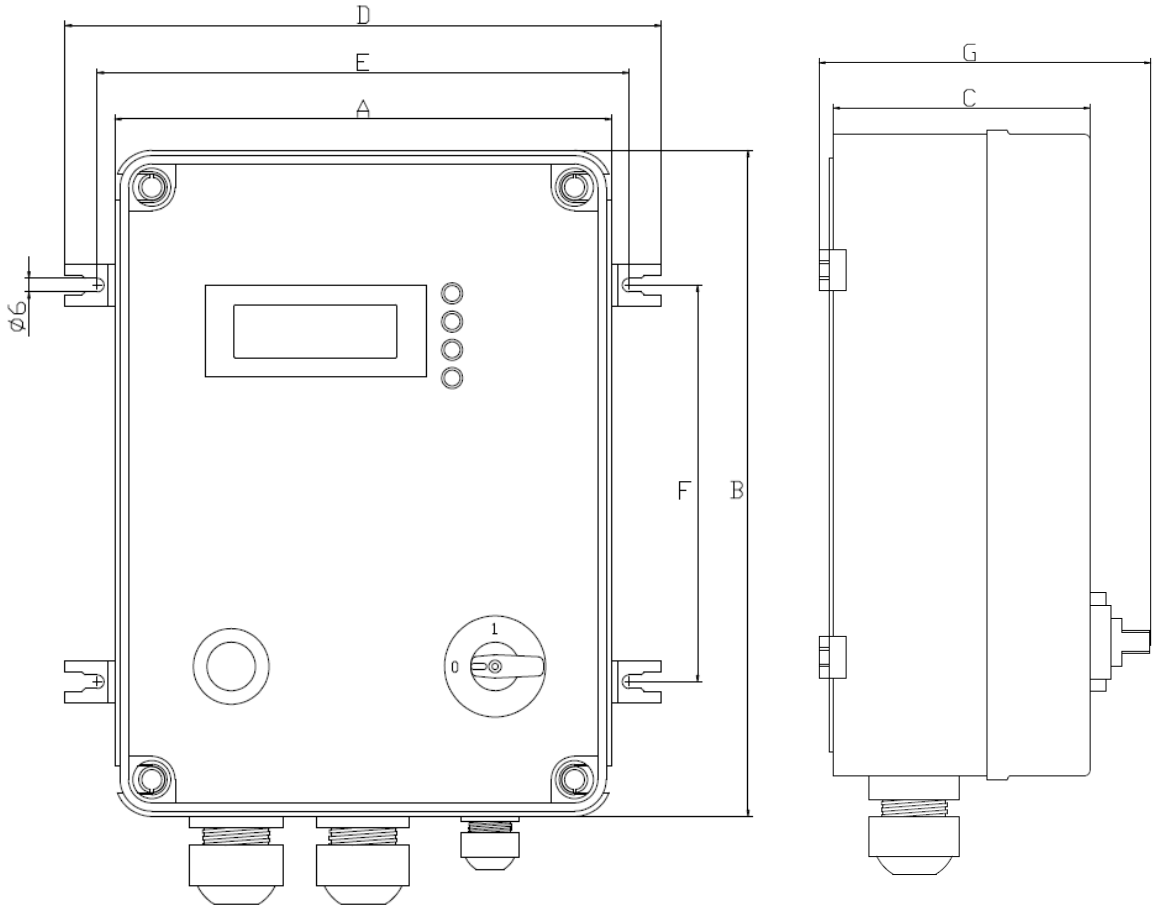

1.4 ARRANGEMENT OF CONNECTION, DISPLAY AND COMMAND PARTS

1.4.1 IP00 internal installation without protective casing

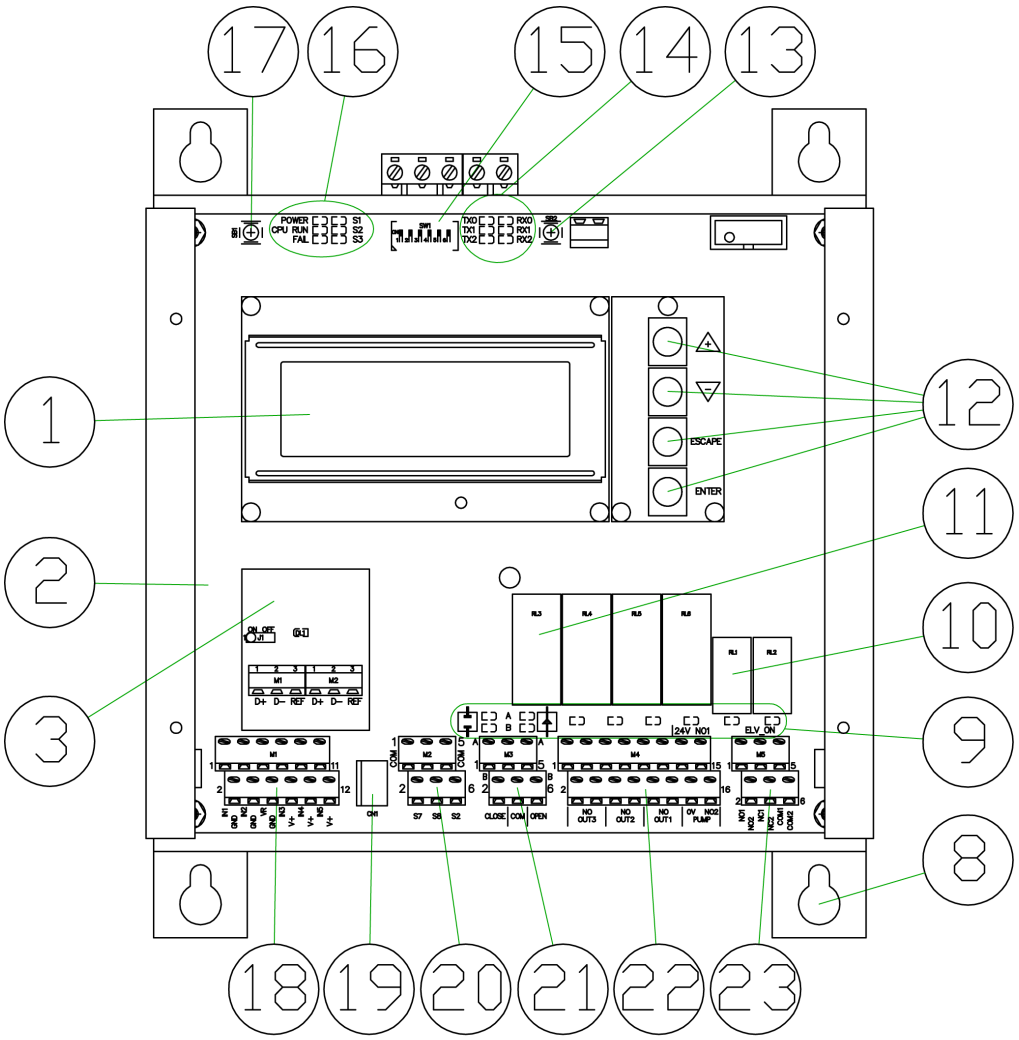

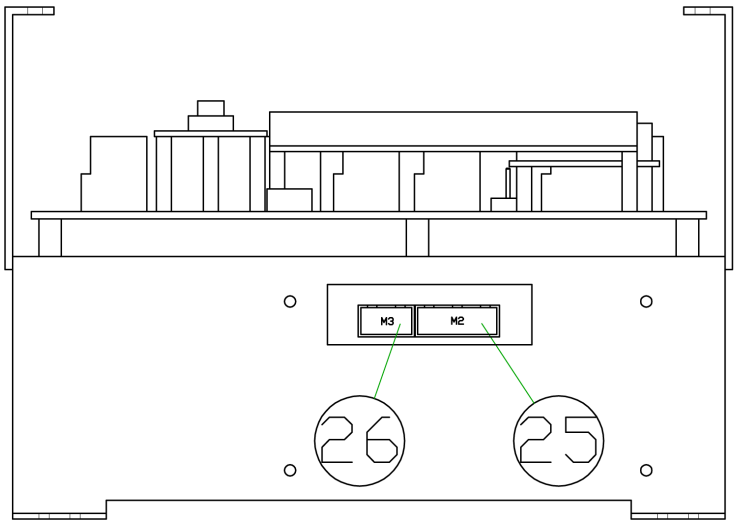

1.4.2 IP55 installation in cabinet

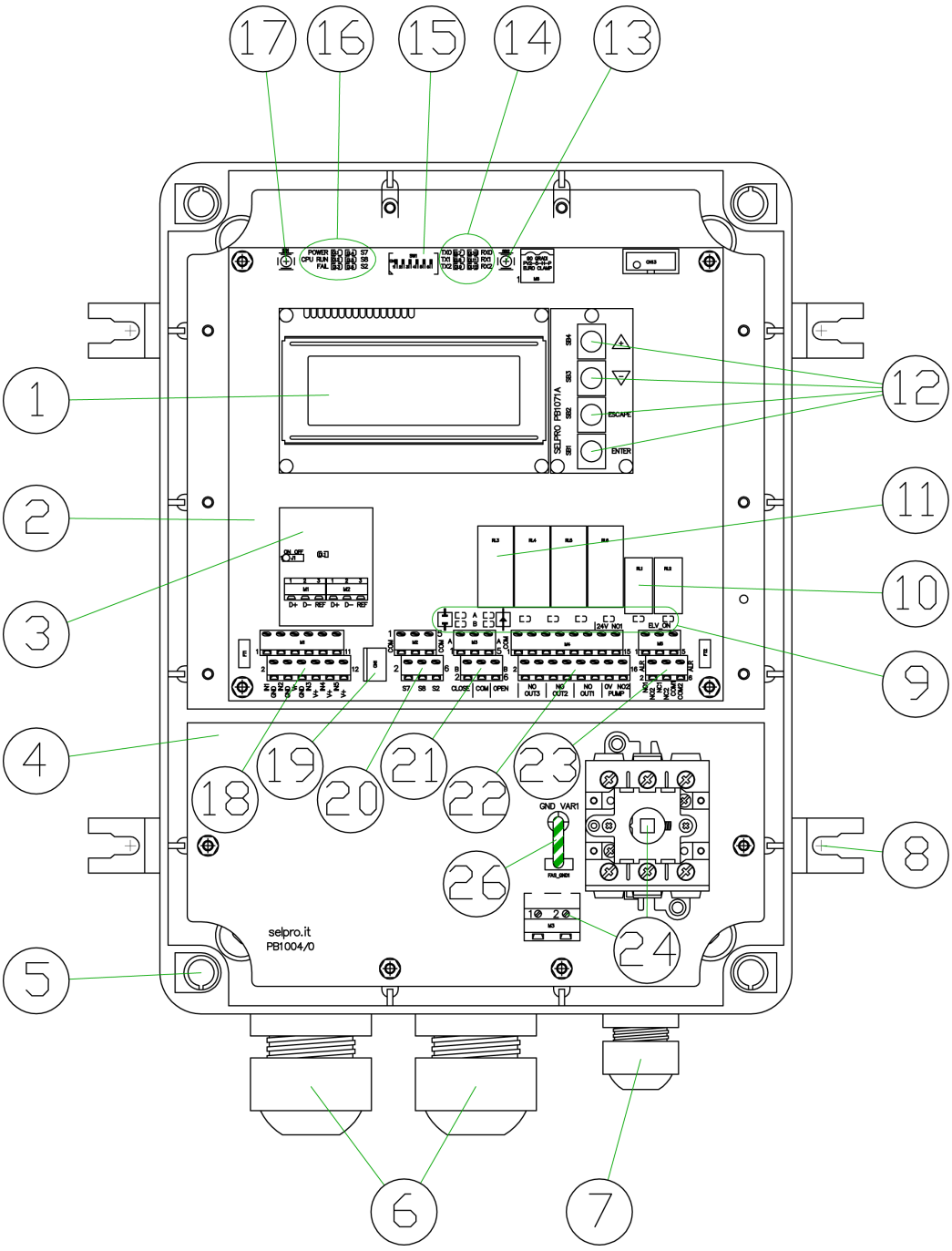

1.4.3 Key for previous diagrams

1	**LCD** backlit display, 4 alphanumeric lines with 20 characters
2	Card spray management**PB1031/2**
3	Optional card for Serial Interface RS485 **PB1073C**
4	Power card with single phase input **PB1004**
5	Holes for lock screws which can be lead sealed to close the lid
6	M32 multi-hole cable glands with 8 Ø5.0mm holes
7	M20 cable gland to clamp cables from Ø10.0mm to Ø17.0mm
8	External support brackets for wall mount
9	LED signal state of outputs for command of actuators and service
10	Service relay: RL1 Alarm and RL2 “Spray Active”
11	Relay command outputs RL3….RL6 for the Open/Close electrovalves and Pump
12	Keys **UP(+) / DOWN(-) / ESCAPE / ENTER** (plug **PB1071A**)
13	**SB2**: Internal push-button for the manual **OUTLET** command
14	LED to monitor activity (RX/TX) on serial lines 0, 1, 2
15	Configuration Dip-Switches
16	LEDS of state, alarm, monitoring and auxiliary inputs
17	**SB1**: RESET manual key **push-button**
18	Terminal Board **M1** for the connection of input analog signals
19	Connector **CN1** for connection of the external push-button for the manual outlet command
20	Terminal Board **M2** for connection of the ON/OFF inputs (auxiliary contacts)
21	Terminal Board **M3** for the connection of commands for modulating valves
22	Terminal board **M4** for the connection of the commands for the Open/Close electrovalves and Pump
23	Terminal board **M5** for the connection of the relays **RL1** and **RL2**
24	Main switch and clamps to connect power and earth
25	Connection terminals voltage supply and earth protection
26	Jumper with Faston to open the varistor circuit (insulation test)

2.0 QUICK GUIDE FOR FIRST START UP

Reading this Quick Guide does not replace the in-depth and complete study of this manual

This chapter is for the user who already has good knowledge of the device and requires a quick consultation guide for the first run of the device. For further details read the later chapters.

1. First establish what type of employment the device is meant for, which can only be one of the following:
   - Adjustment Spray with ON/OFF command of 1 Open/Close valve.
   - Adjustment Spray with ON/OFF command of 2 Open/Close valves.
   - Adjustment Spray with ON/OFF command of 3 Open/Close valves.
   - Adjustment Spray with Open/Stop/Close of 1 modulating valve.
   - Adjustment Spray with Open/Stop/Close of 2 modulating valves.
2. Establish that the Automatic Drainage function is requested.
3. Set up/Check that the power and signal electrical connections have been made state-of-the-art and that they correspond to the use that the device is destined for, as defined above.

Electricity supply:
Version IP00 internal panel, see par. 3.2.1
Version IP55, external, see par. 3.2.2

Command signal 1-10 V from Master Controller: controls the terminal board **M1** (see par. 3.3.1)
From controller RGM/AURT see par. 3.3.3
From controller ECM/WMC2 and DSV/ARUS see par. 3.3.4

Inputs of transducers: control the terminal boards **M1** (see para. 3.3.1)
Analogic Signals Connection for Open/Close Valves, see para. 3.3.1.1
Analogic Signals Connection for N°1 Modulating Valve (up to 8 bar) see para. 3.3.1.2
Analogic Signals Connection N°2 Modulating Valves (from 8 to 16 bar) see para. 3.3.1.3

Open/Close Valve output command: terminal strip **M4** (see para. 3.3.6).
Configuration for On/Off command of N°1 electrovalve NC and of N°1 drain electrovalve NA see para. 3.3.6.1
Configuration for On/Off command of N°2 electrovalve NC and of N°2 drain electrovalve NA see para. 3.3.6.2
Configuration for On/Off command of N°2 electrovalve NC and of N°3 drain electrovalve NA see para. 3.3.6.3
Configuration for On/Off command of N°3 Motorized three-way Open/Close electrovalve with incorporated drain, see para. 3.3.6.4.
Configuration for **Automatic Drainage** , On/Off command up to N°2 electrovalve NC and up to N°2 electrovalves NC for periodic drainage, see para. 3.3.6.5
Configuration for **Automatic Drainage**: On/Off command up to N°2 Motorized Open/Close valves NC and up to N°2 electrovalves NC for periodic drainage, see para. 3.3.6.6
Configuration for **Automatic Drainage**, On/Off command of N°3 electrovalve NC and of N°3 electrovalves NC for periodic drainage, see para. 3.3.6.7
Configuration for **Automatic Drainage**, On/Off command of N°3 motorized valves and of N°3 electrovalves NC for periodic drainage, see para. 3.3.6.8

Modulating valves output command: terminal strip **M3** (see par. 3.3.5) .
Configuration for command of N°1 motorized modulating valve, output connection see para. 3.3.5.1
Configuration for command of N°2 motorized modulating valves, output connection see par. 3.3.5.2
N.B. To make use of the Automatic Drainage function in this case, no special wiring is required.

Outlet pump command and/or hydraulic intake valve:
controls the **M4** terminal board (see para. 3.3.6). For the connection diagram, valid for all the provided configurations, see par. 3.3.6.9

N.B. When the **Automatic Drainage** function is used with N°3 spray tubing ramps and Open/Close valves, the relay **RL6** is not available for the pump command, which must therefore be commanded in another way.

ON/OFF Logic Inputs (OPTIONAL):
control the M2 terminal board, see par. 3.3.2 also for the connection diagram. They are not indispensable for the equipment to function.

Service relay (OPTIONAL):
controls the **M4** terminal board**,** see par. 3.3.7 also for the connection diagram. The use of this relay is not necessary for the equipment to function.

4. **Power the AWS unit and call up the appropriate default configuration (see par. 6.3.2).**

5. **Wait for the start page to be displayed (see chapter 4.0).** If modifications are required, continue or proceed to point **7**.

6. Access the menus of display (para.6.4) and change of parameters (par.6.5). Every parameter has an assigned default value, defined in the table in par. 6.2, modifiable depending on the characteristics of the system.

a. Input or Change "1: SPRAY Parameters": see par. 6.5.1, a careful check of the defaults is advisable
b. Input or Change "2: SETUP Parameters": see par. 6.5.2**,** a careful check of the defaults is advisable.
c. Input or Change "3: Programmable Alarm": see par. 6.5.3, a careful check of the defaults is advisable.
d. Input or Change "4: PID Parameters": see par. 6.5.4: usually the default values are correct.

7. Input or Change "5: MODBUS Parameters": see par. 6.5.5, only to be used if the optional **PB1073C** plug is used for connection to ModBus RS485

8. Input or Change "6: R.T. CLOCK Setup": see par. 6.5.6, to align internal clock to local time.

9. Manual verification of the wiring, use of the Manual Output Commands: see chap. 7 to check the cabling made in previous point "2" and the proper function of the connected actuators.

3.0 INSTALLATION AND ELECTRICAL CONNECTIONS

The installation must be exclusively performed by a qualified operator state-of-the-art

3.1 Installation

Install the unit in environments where temperature ranges between -20°C and +50°C, otherwise proper function and integrity of the device itself shall be compromised.

If installation should require exposure to temperatures lower than -10°C it is advisable to avoid continued electrical connection and disconnection to the controller: a constant power supply will maintain the controller within running temperatures and eliminate any problem of condensation forming. To stop function, use the terminal board contact S2 = STOP, see par. 3.3.2 .

Install the controller preferably in a position which is protected from direct sunlight and from rain.

Only for version in IP55:

- For wall mount use the four brackets in the kit, avoiding to drill the bottom of the container directly.
- Mount the device vertically and only use the predisposed holes on the lower side, terminal power side for insertion of the connection cables.
- In order to maintain the IP55 degree of protection, use the cable glands supplied, quality sheaths and cables of the required dimensions
- Once installation has ended, always check the perfect seal of the external protection cover.

3.2 Power supply connection

Set up the electrical connections with flexible cable nominal section 1.5 mm^2 / 22-14 AWG Cu

Connect as indicated in the following drawings.

The power cables should be installed separately from the signal cables, keeping a distance of at least 100 mm.

Do not mix power cables and signal cables in the same duct; in the case of an intersection, provide for an installation with a 90° angle.

Protect the power cables with time delay fuses 2 A / 500 V.

Before powering the unit, carefully check the connections made.

Where there is power supply "interference," due to the presence of other electrical power components which make it irregular (i.e.: power contactors), it is advisable to install supplementary ‘surge arrester’ filters on the controller’s electric input.

3.2.1 Version IP00 for Voltage supply single phase 400 V~, 50/60 Hz

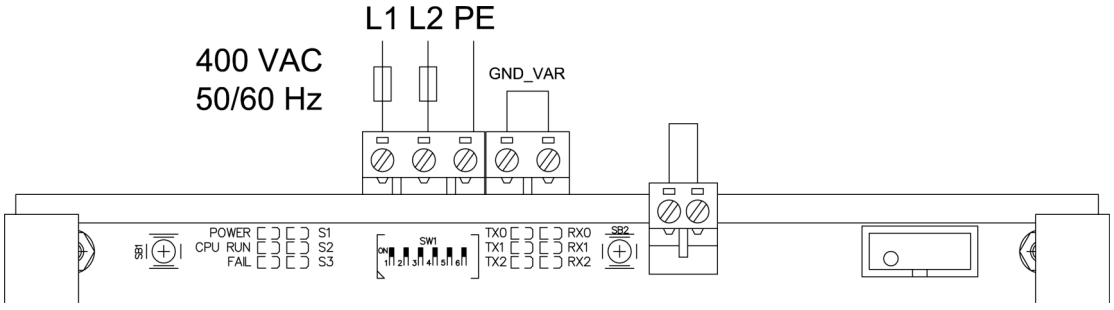

3.2.2 Version IP55 for Voltage supply single phase 400 V~, 50/60 Hz

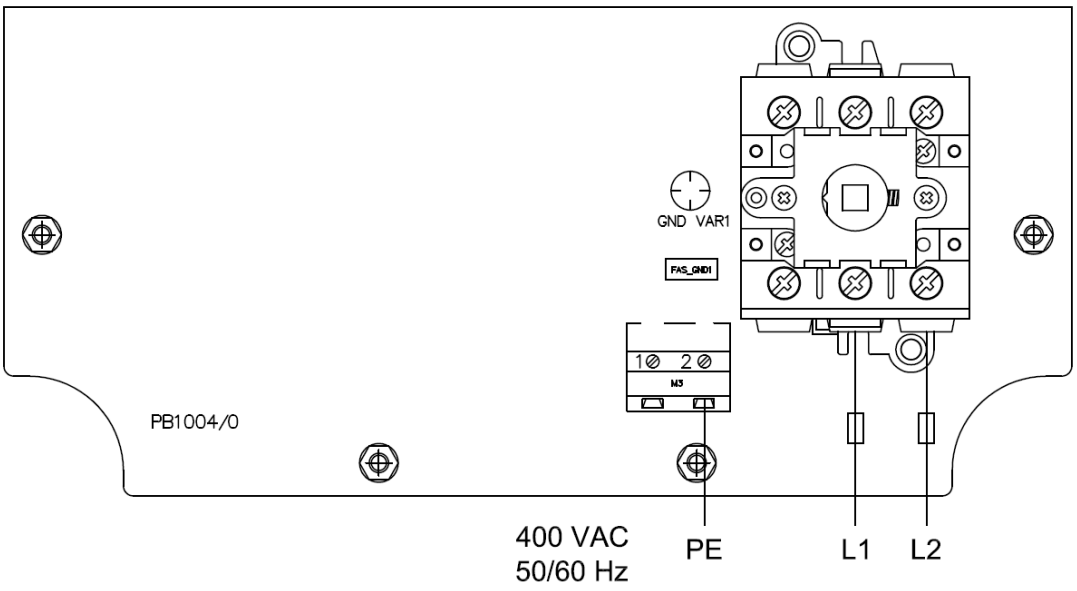

3.3 Connection of Sensors and Command Signals

The AWS controller has been set up for direct connection of sensors/signals and auxiliary contacts to support adjustment. The picture below represents the detailed outline of the connection terminal boards on the card: M1-M2-M3-M4-M5.

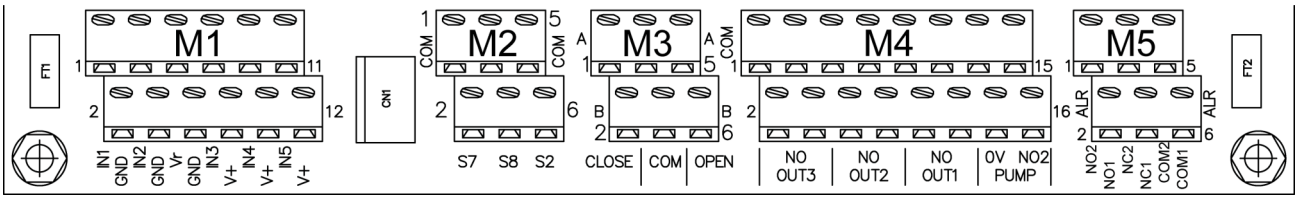

3.3.1 Terminal Board M1: Analog inputs

The M1 terminal board is predisposed to connect the 1-10 V input command and up to four transducers, required to command the device. Here below, the table detailing the signals for each terminal and the connection diagrams for the different default configurations available

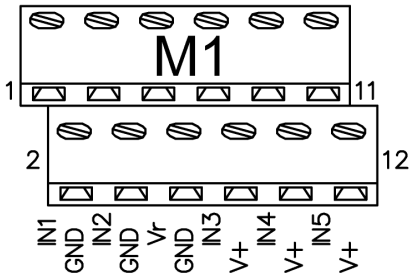

Terminal Board M1		Description
1	**IN1**	Analog input 0-10 V for 1-10 V command signal coming from command controller of the fans (RGM, DSV, ECM ….)
2	**GND**	Reference Mass
3	**IN2**	Analog input for NTC 10 kohm @ 25 °C to read ambient temperature
4	**GND**	Reference Mass
5	**Vr**	Power output +10 Vdc, Max 10 mA, stabilized and protected by short circuit
6	**GND**	Reference Mass
7	**IN3**	Input for pressure transducer 4-20 mA, **reading spray supply line pressure**
8	**+V**	Output +22 Vdc, 40mA not stabilized for transducer power, protected by short circuit
9	**IN4**	Input for transducer with pressure of 4-20 mA, **reading nozzle supply pressures**, below the modulating valve
10	**+V**	Output +22 Vdc, 40mA not stabilized for transducer power, protected by short circuit
11	**IN5**	Input for pressure transducer 4-20 mA, **reading intermediate pressure**, only for use with two modulating valves in series
12	**+V**	Output +22 Vdc/40mA not stabilized for transducer power, protected by short circuit

3.3.1.1 Connection of Analog Signals for Regulation with Open/Close Electrovalves

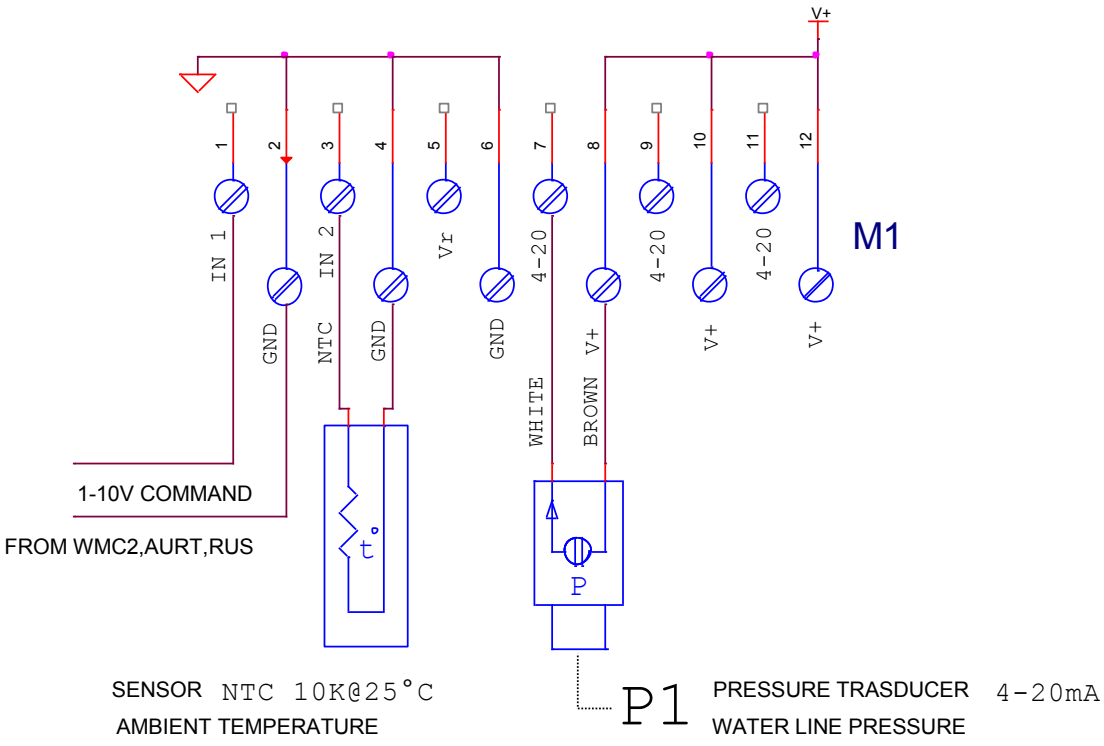

3.3.1.2 Connection of Analog Signals for Modulating Regulation with 1 valve (up to 8 bar)

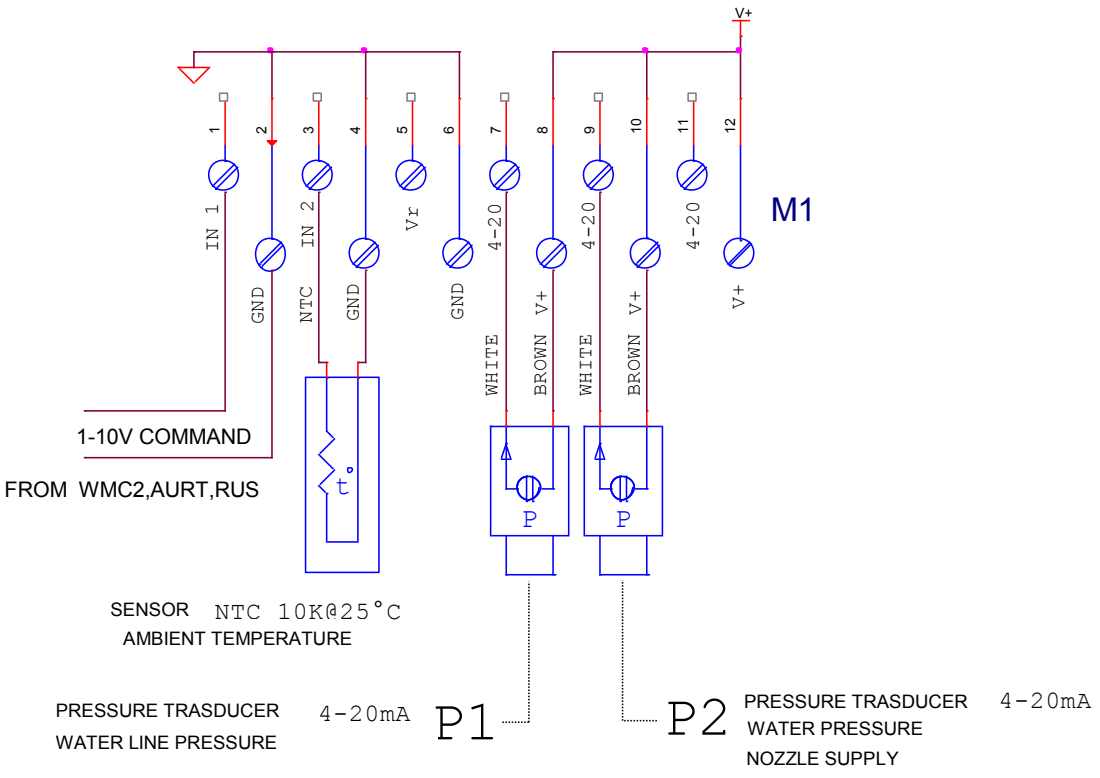

3.3.1.3 Connection of Analog Signals for Regulation with 2 valves (from 8 bar up to 16 bar)

ANALOG INPUT WITH 2 VALVES

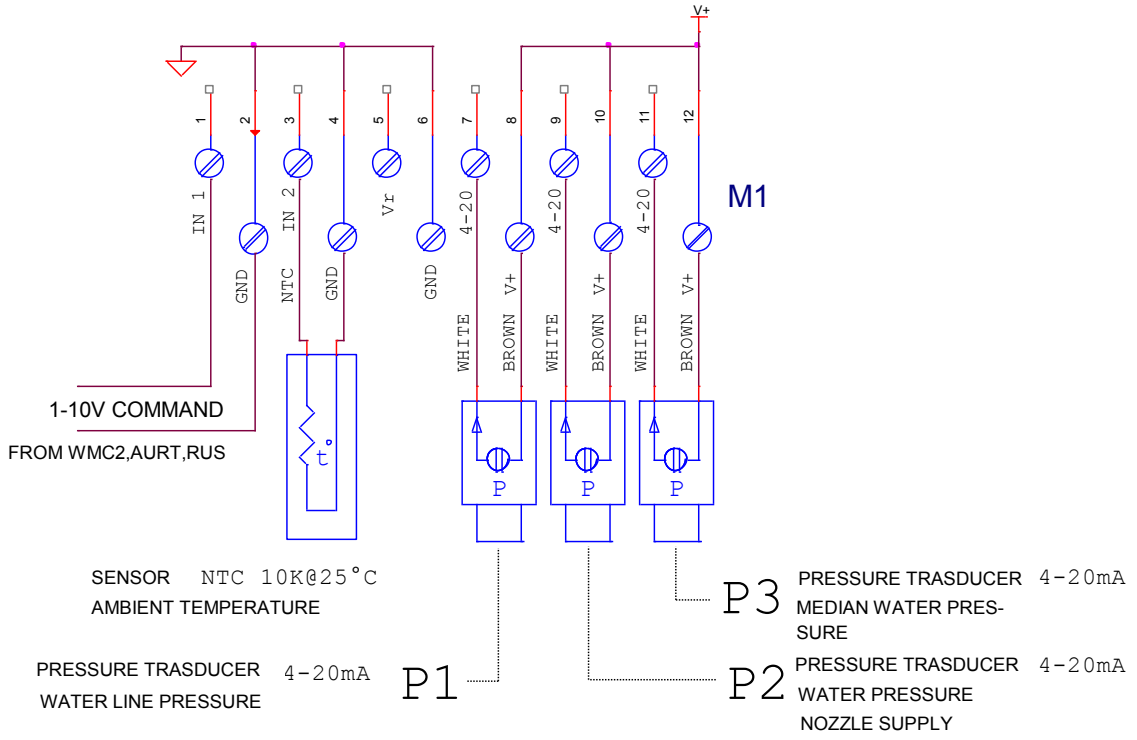

3.3.2 Terminal Board M2: On/Off Logic Inputs

Only connect potential-free contacts.

Under no circumstances apply a voltage to these inputs

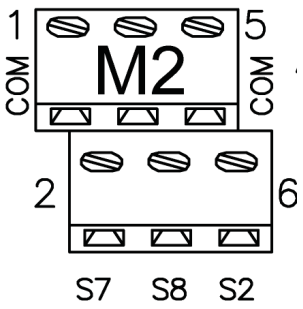

Mors M2		Description
1	**COM**	Common + 24 Vdc
2	**S7**	Input command Outlet, active closed
3	**COM**	Common + 24 Vdc
4	**S8**	Input litre counter
5	**COM**	Common + 24 Vdc
6	**S2**	Input Start/Stop, Closed=Stop

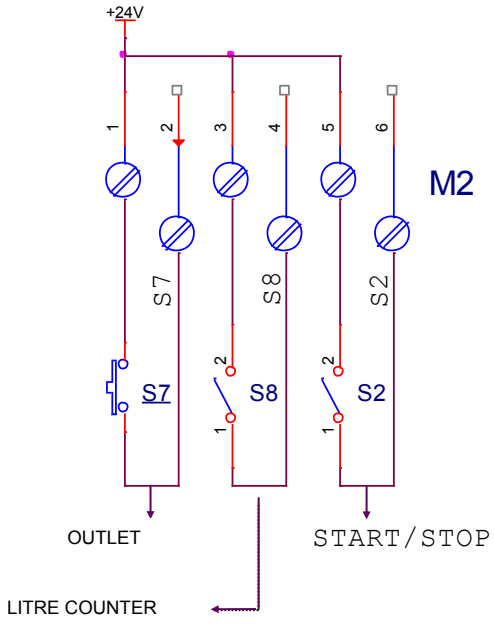

3.3.3 Connection of the Analog Signal command 1-10 V from RGM

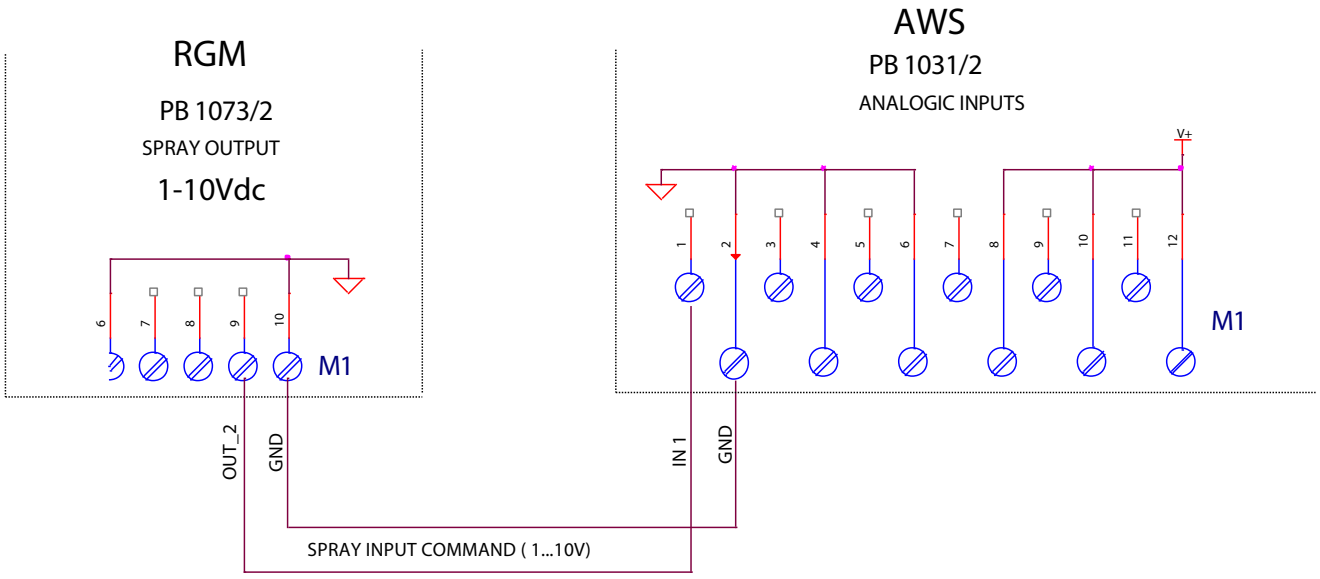

3.3.4 Connection with ECM /WMC2 and DSV/ARUS: Analog signal command 1-10Vdc and Signal indicating return of "Spray Active" (also see par. 3.3.7)

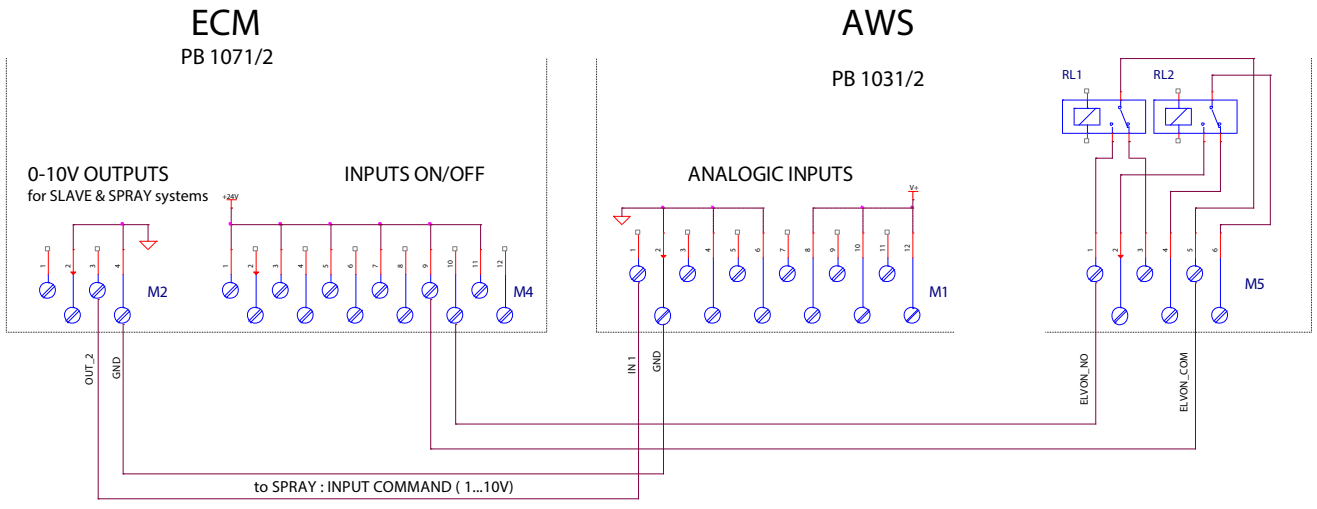

Diagram valid ONLY when ECM and AWS are separated

3.3.5 M3 TERMINAL BOARD: Output Command Modulating Motorized Valves

The M3 terminal board is for the connection of one or two modulating valves of the “Open/Stop/Close” type. The command is of the ON/OFF type made with static outputs protected by a short circuit.

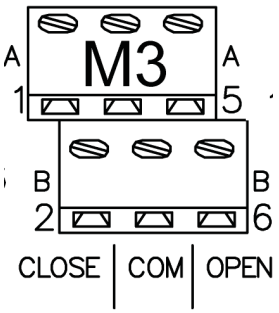

Terminal Board M1		Description
1	**Close A**	Output command to OPEN motorized valve “A”
2	**Close B**	Output command to OPEN motorized valve “B”
3	**Common**	Common (0 Vdc)
4	**Common**	Common (0 Vdc)
5	**Open A**	Output command to CLOSE motorized valve “A”
6	**Open B**	Output command to CLOSE motorized valve “A”

3.3.5.1 Connection for 1 Modulating Motorized Valve and Open/Close Electrovalve for (NC) outlet, uses the Open/Stop/Close Output “A” command

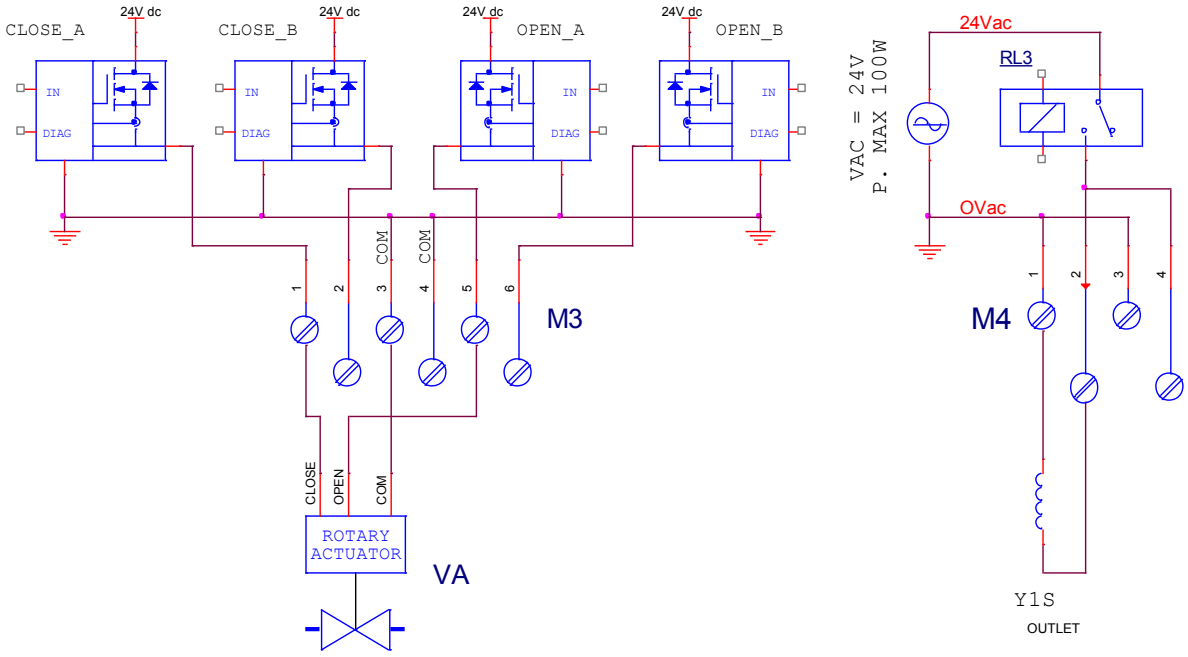

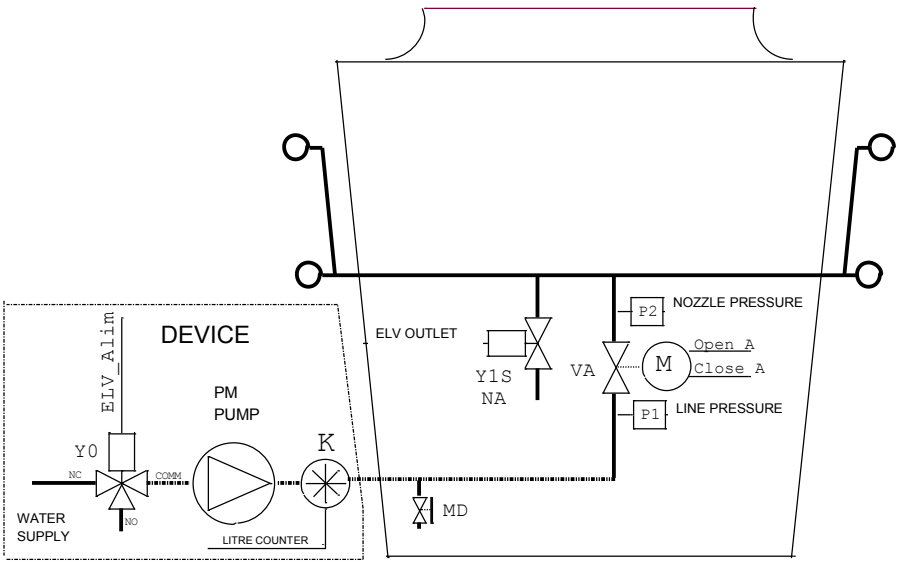

3.3.5.2 Connection for 2 Motorized Modulating Valves and Open/Close(NC) outlet Electrovalve, uses the Open/Stop/Close outputs “A” and “B”.

The VA valve, controlled by Output “A”, shall always be placed after the VB valve, commanded by output “B”.

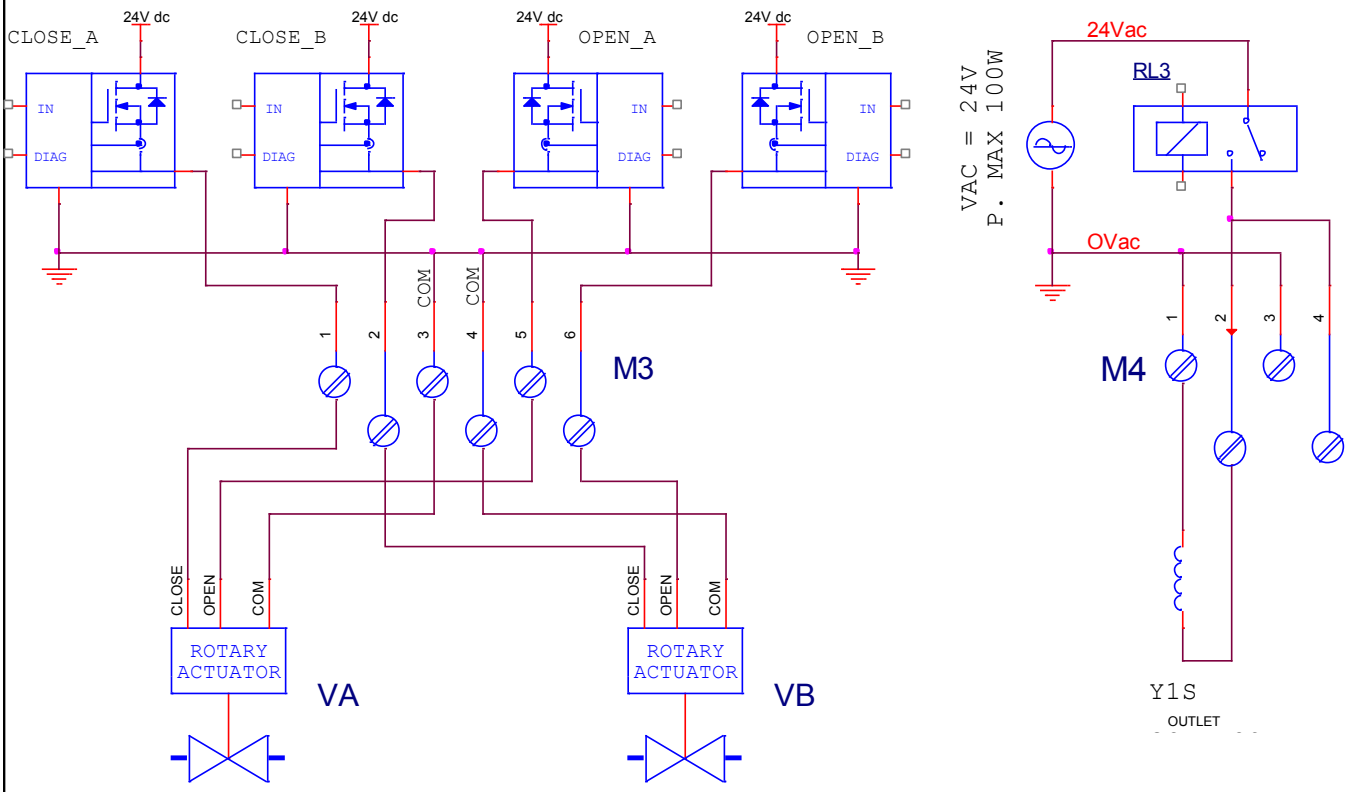

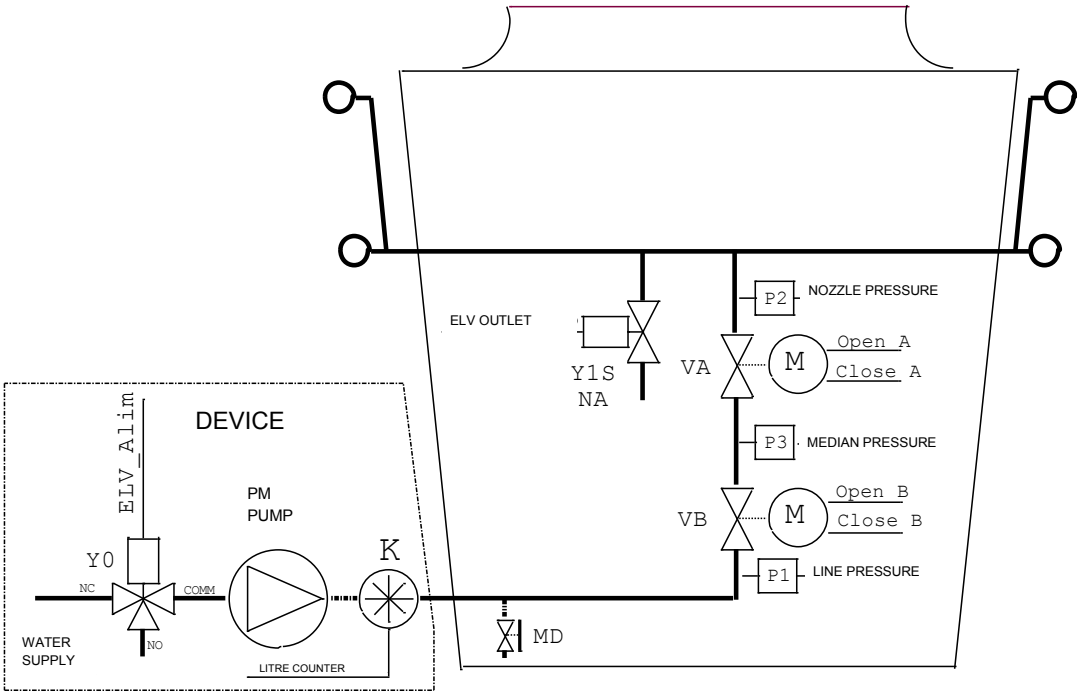

3.3.6 M4 TERMINAL BOARD: Outputs Command valves Open/Close and Power supply of the device

The M4 terminal board can connect up to 3 electrovalves (or motorized valves) of the Open/Close type, to supply the spray tubing ramps and to command the pump and/or the electrovalve to supply the unit; uses 4 relays from 16 A 250 V~

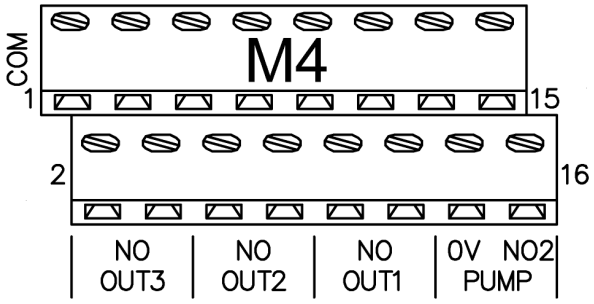

Terminal Board M1		Description
1	**Common**	Common 0 V~
2	**Out3 NO**	Contact NO Open/Close command valve N°3
3	**Common**	Common 0 V~
4	**Out3 NO**	Contact NO electrovalve command NO outlet N°3
5	**Common**	Common 0 V~
6	**Out2 NO**	Contact NO Open/Close command valve N°2
7	**Common**	Common 0 V~
8	**Out2 NO**	Contact NO electrovalve command NO outlet N°2
9	**Common**	Common 0 V~
10	**Out1 NO**	Contact NO Open/Close command valve N°1
11	**Common**	Common 0 V~
12	**Out1 NO**	Contact NO electrovalve command NO outlet N°1
13	**24 V~**	Output voltage supply in alternate current 24 V~
14	**0 V~**	Output voltage supply in alternate current 0 V~
15	**Pump NO1**	Contact NO command pump / electrovalve intake device
16	**Pump NO2**	Contact NO command pump / electrovalve intake device

3.3.6.1 Connection On/Off commands for 1 NC electrovalve (normally closed) and of 1 NA outlet electrovalve (normally open) optional.

WSS SYSTEM

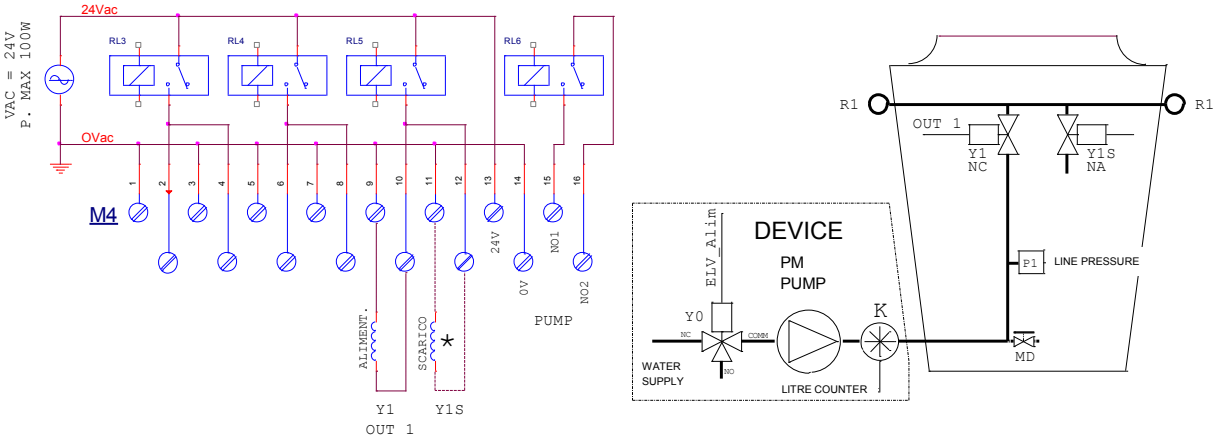

*Optional **NA** electrovalves (**normally open**) , used for the immediate outlet of the ramps

3.3.6.2 Connection On/Off command outputs for 2 NC electrovalves (normally closed) and of 2 NA outlet electrovalves (normally open) optional.

WSS SYSTEM

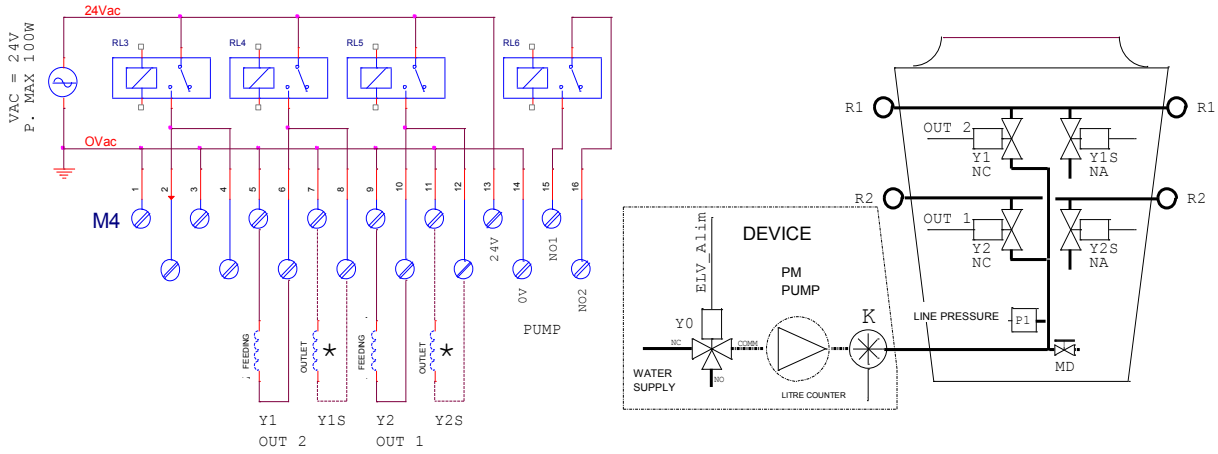

* Optional NA electrovalves (normally open), used for the immediate outlet of the spray tubing ramps

3.3.6.3 Connection On/Off command outputs for 3 NC electrovalves (normally closed) and of 3 NA outlet electrovalves (normally open) optional.

WSS SYSTEM

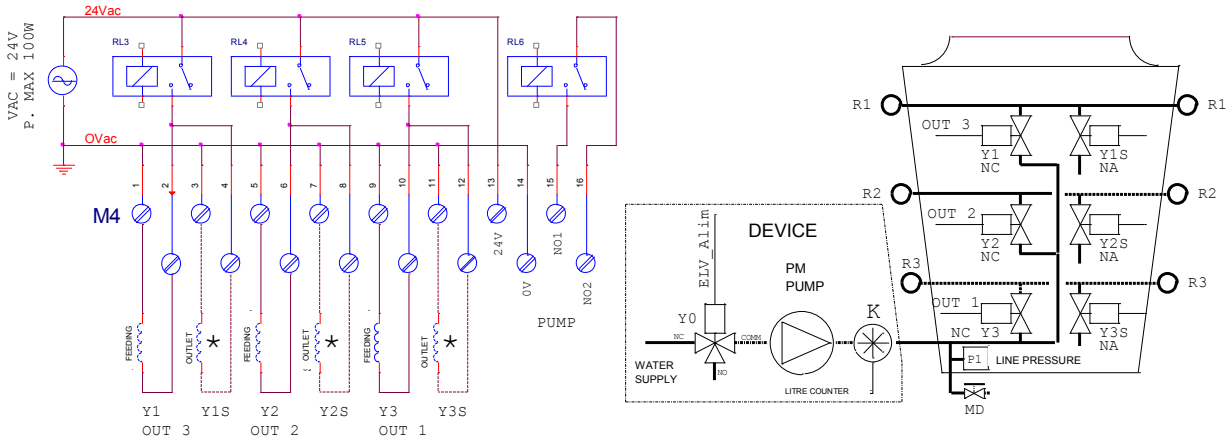

* Optional NA electrovalves (normally open) , used for the immediate draining of the spray tubing ramps

3.3.6.4 Connection ON/OFF outputs for 3 motorized Open/Close valves , normally closed (NC) . When the motorized valve is completely closed, it opens the drain of the spray tubing ramps.

DRY AND SPRAY SYSTEM

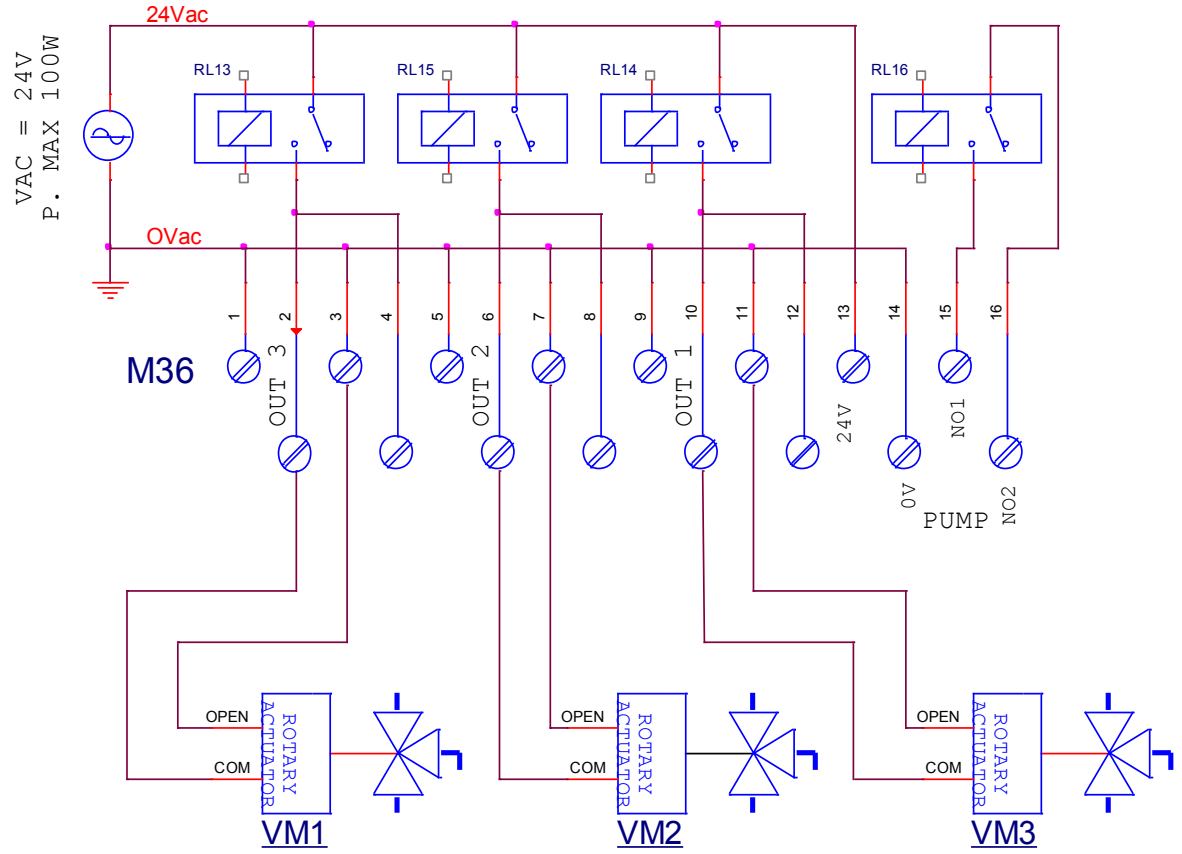

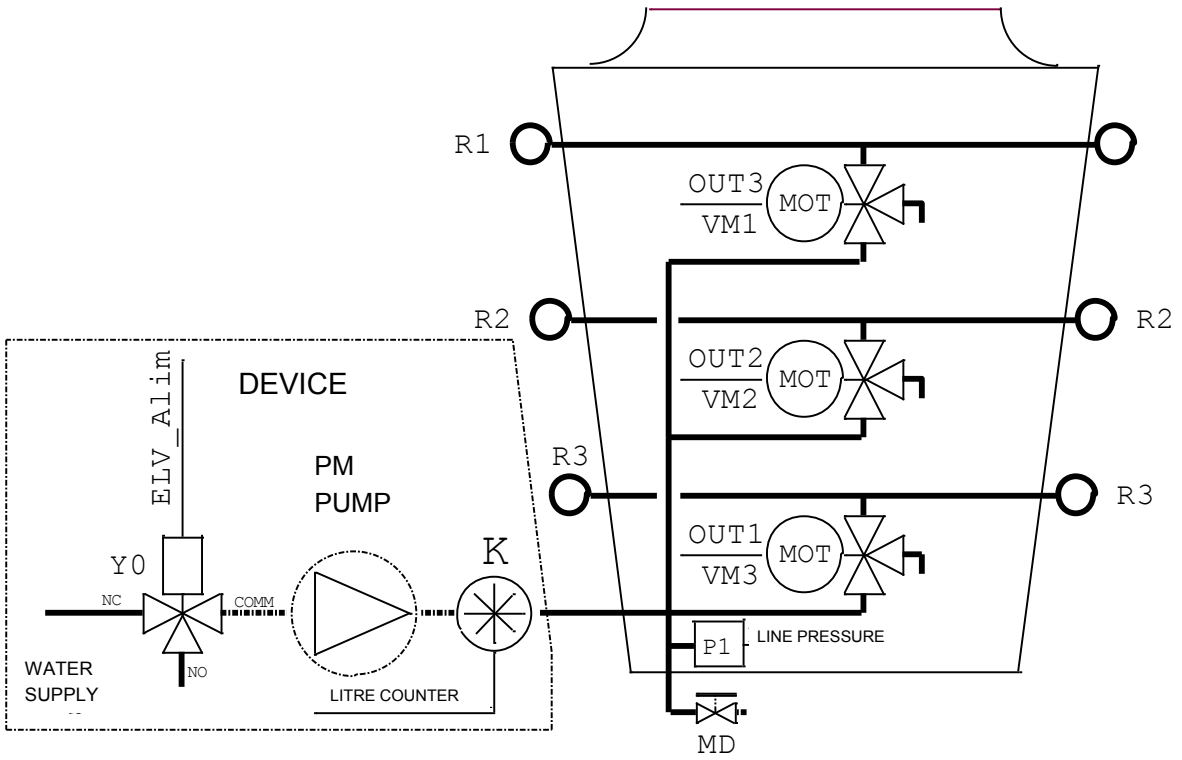

3.3.6.5 Automatic draining: for a number of spray tubing ramps equal to or less than two, connection of ON/OFF command outputs for 2 Open/Close electrovalves, normally closed (NC), and 2 NC outlet electrovales periodically commanded.

WSS SYSTEM

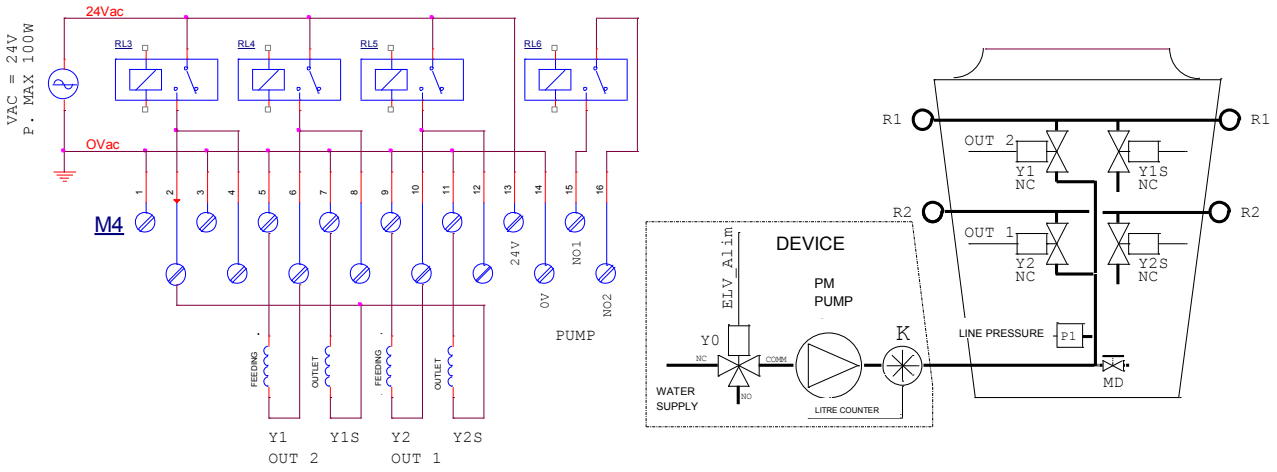

"N.B. This function IS NOT AVAILABLE with 3 Open/Close Valves and 3 ramps

3.3.6.6 Automatic draining: for a number of spray tubing ramps equal to or lower than two, connection of command outputs.

ON/OFF for 1 or 2 Open/Close motorized valves, normally closed (NC), and 2 NC outlet electrovalve periodically commanded. The drain opens only if the corresponding motorized valve is completely closed.

DRY AND SPRAY SYSTEM

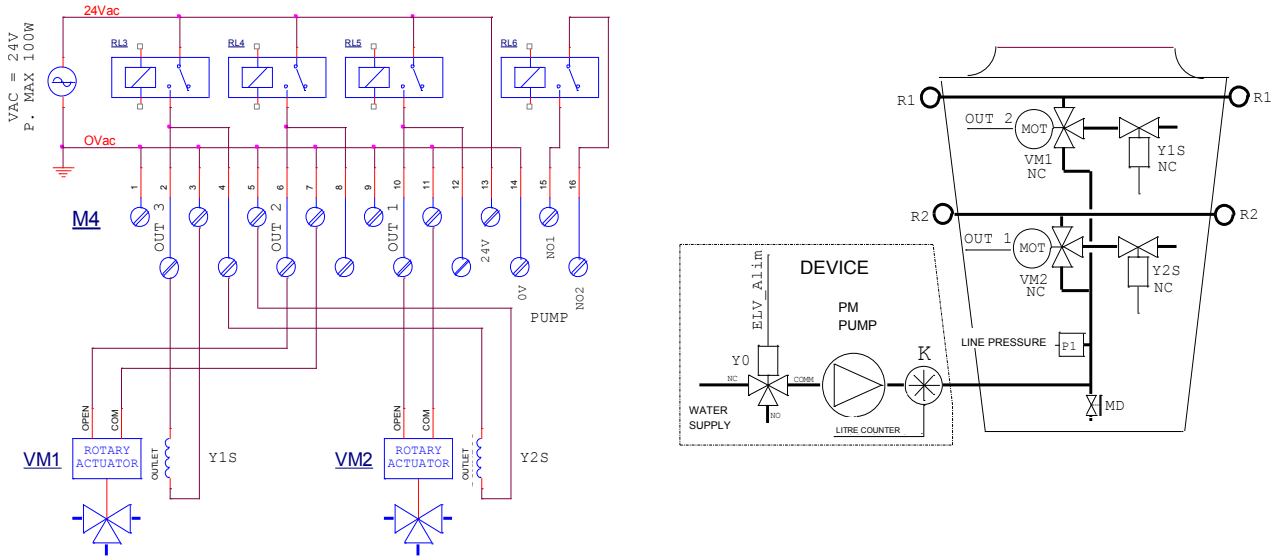

"N.B. This function IS NOT AVAILABLE with 3 Open/Close Valves and 3 ramps

3.3.6.7 Automatic draining with three ramps and electrovalves, ON/OFF command output connection for N°3 NC (normally closed) Open/Close electrovalves and N°3 NC drainage electrovalves, commanded periodically.

WSS SYSTEM

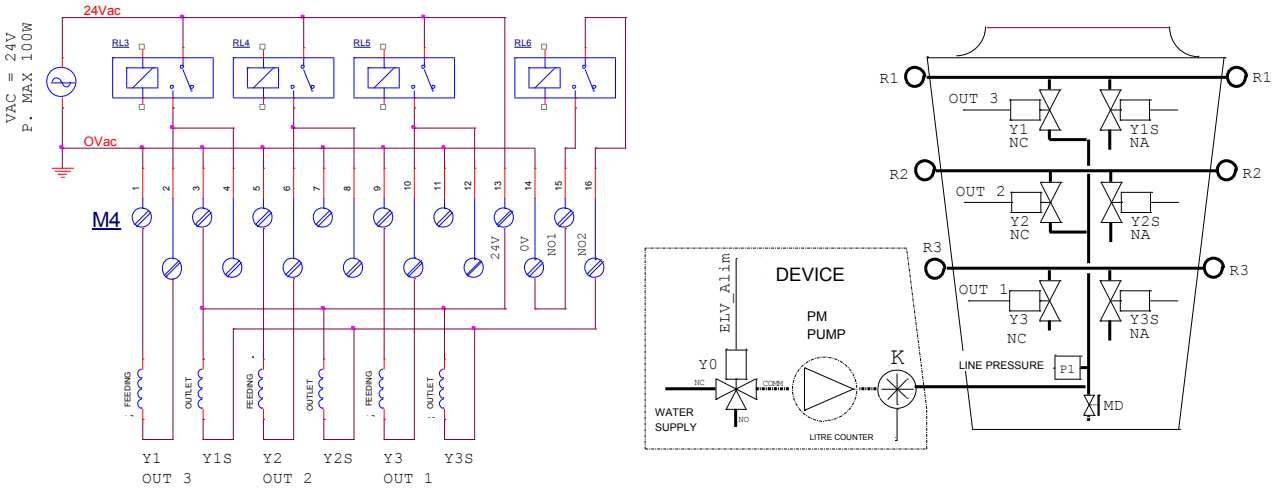

N.B. To use this function, RL6 has to be in the “ON” position (see para. 4.3) to command the drainage electrovalves rather than the pump; in this case, the consent to start up the pump will be the responsibility of the operator and will no longer be managed by AWS.

3.3.6.8 Automatic draining with three ramps and motorized valves, , ON/OFF command output connection for N°3 NC (normally closed) three-way Open/Close motorized valves and N°3 drainage electrovalves, periodically commanded. The draining of a ramp only opens if the corresponding motorized valve is completely closed and the automatic drainage phase is in operation.

DRY AND SPRAY SYSTEM

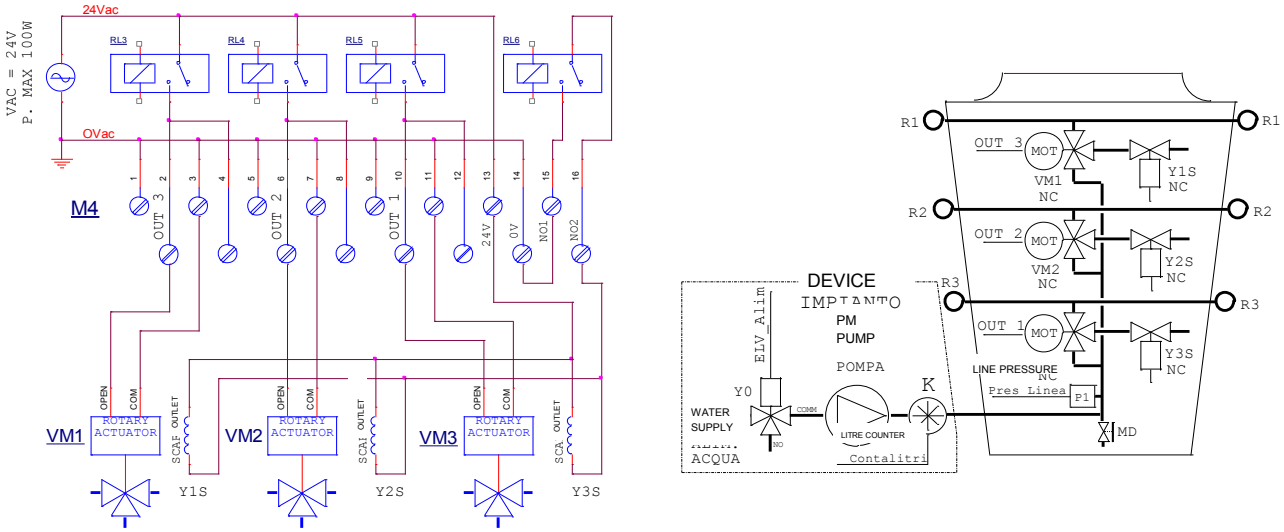

N.B. To use this function, RL6 has to be in the “ON” position (see para. 4.3) to command the drainage electrovalves rather than the pump; in this case, the consent to start up the pump will be the responsibility of the operator and will no longer be managed by AWS.

3.3.6.9 Connection of command outlet for pump and/or electrovalve for hydraulic supply

EXTERNAL SUPPLY PUMP
REMOTE CONTROL SWITCH

VOLTAGE: MAX 250Vac
CURRENT: MAX 2 A

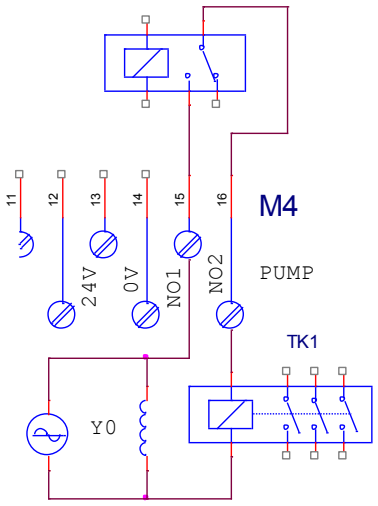

LOCAL SUPPLY PUMP
REMOTE CONTROL SWITCH

SOLENOID COIL VOLTAGE: 240Vac
POWER RATING: 15 VA

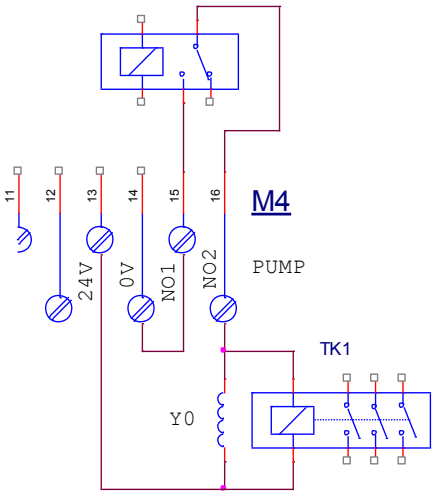

N.B If automatic draining is present with three ramps, it is not possible to use it to command as illustrated above.

3.3.7 M3 TERMINAL BOARD: Service relay with these functions:

- **RL1:** energized in the absence of alarms, device functioning regularly
- **RL2:** energized with pump functioning and one or more valves to power spray tubing ramps open, it de-energizes in the "Total draining" or "Automatic Draining" mode.

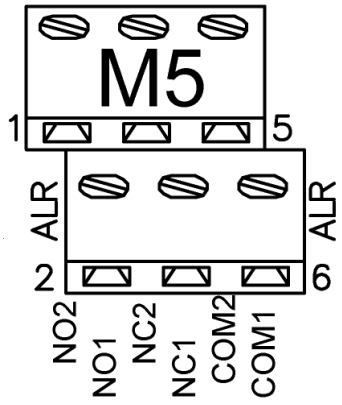

AWS REMOTE SIGNALS OUTPUTS

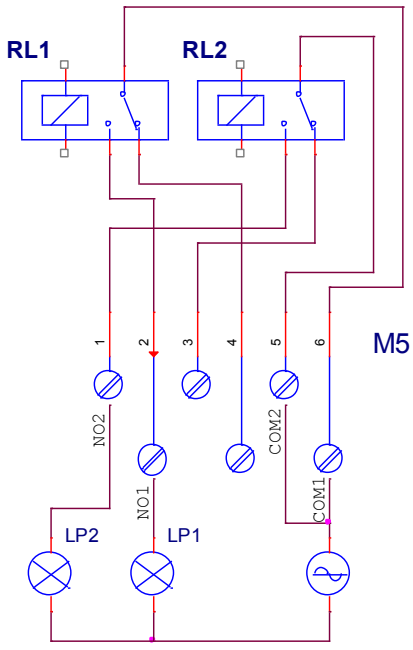

M5 Terminal board		
N°	**Initials**	**Description**
1	**NO1**	Relay RL1 contact NO
2	**NO2**	Relay RL2 contact NO
3	**NC1**	Relay RL1 contact NC
4	**NC2**	Relay RL2 contact NC
5	**CO1**	Relay RL1 Common
6	**CO2**	Relay RL2 Common

LP1 : LIT WHEN SYSTEM IN OPERATION AND IN THE ABSENCE OF ALARMS

LP2 : LIT WHEN VALVES ACTIVE

TENSION : max 250Vac
POWER : MAX 2A
RESISTIVE LOAD : max 250Vac

3.3.8 PB1073C Optional Module: Connection for RS-485 (ModBus) Isolated Serial Line (ModBus)

On the card of the AWS controller, it is possible to insert the RS-485 - MODBUS (RTU) serial connection option.The two terminal boards M1 and M2, on the optional card (plug PB1073C), are used for electrical connections of the RS-485 serial line, managed with the protocol “Modbus RTU IN “SLAVE” mode, for connection to the “PC Host”.

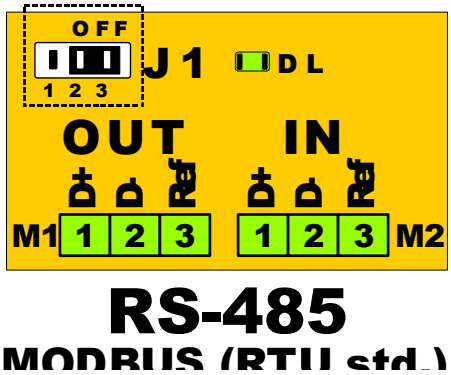

M1 and M2 Terminal Boards		Description
1	D+	IN/Out Serial RS485 Straight
2	D-	IN/Out Serial RS485 Denied
3	REF	Isolated reference mass

Terminals M1 and M2 are electrically connected with the same number

	Posit.	Termination (**120 ohm**)
OFF J1 1 2 3	**2/3**	**Excluded**
ON J1 1 2 3	**1/2**	**Inserted**

N.B. The Jumper J1 shall be ON after the serial line has been connected

For connection of serial line RS-485, use a special cable for outdoors for these applications, as for example ITC BELDEN 15S7D Serial Cable for LAN Networks. The cable length can reach up to 1,000 mt



Technical specifications	
Conductor 1	CuSn 7x0,25mm
Conductor 1 (resistance)	50 Ohm/Km
Conductor 2	CuSn 7x0,25mm
Conductor 2 (resistance)	50 Ohm/Km
Dielectric	PEE 2,35mm mm
Coded Colors	White/Orange/Blue
Foil 1	AL/Pet 100 %
Braid 1	CuSn 65 %
Internal Jacket	PVC fire retardant Gray oil-proof
Internal Jacket (diameter)	7,6 ± 0,1 mm
External Jacket	PE UV resistant
External Jacket (diameter)	9,0 ± 0,1 mm
Impedance	120 ± 15 Ohm
Mutual/coax capacity	Mutual 36 pF/m
Velocity Ratio	78 %
Screening Efficency (100-900 MHz)	> 85 dB
Drain wire	CuSn 7x0,20mm
Working Voltage	300 V
Temperature rating	-20 / +80 °C
Voltage Withstanding	C-4 (U0=400V)
Test Voltage	4,5 KVac
Minimun bending radius	40/90 mm
Weight	8,4 Kg/100m

CONNECTION DIAGRAM FOR SERIAL RS-485

Connect the cable (braided and shielded + continuity conductor) of the data line (the Modbus network) to terminals as for this diagram:

M1	1	D0 +	2	D0 -	3	REF
M2	1	D0 +	2	D0 -	3	REF

On the last interface at end of line, insert ending (J1 = ON)

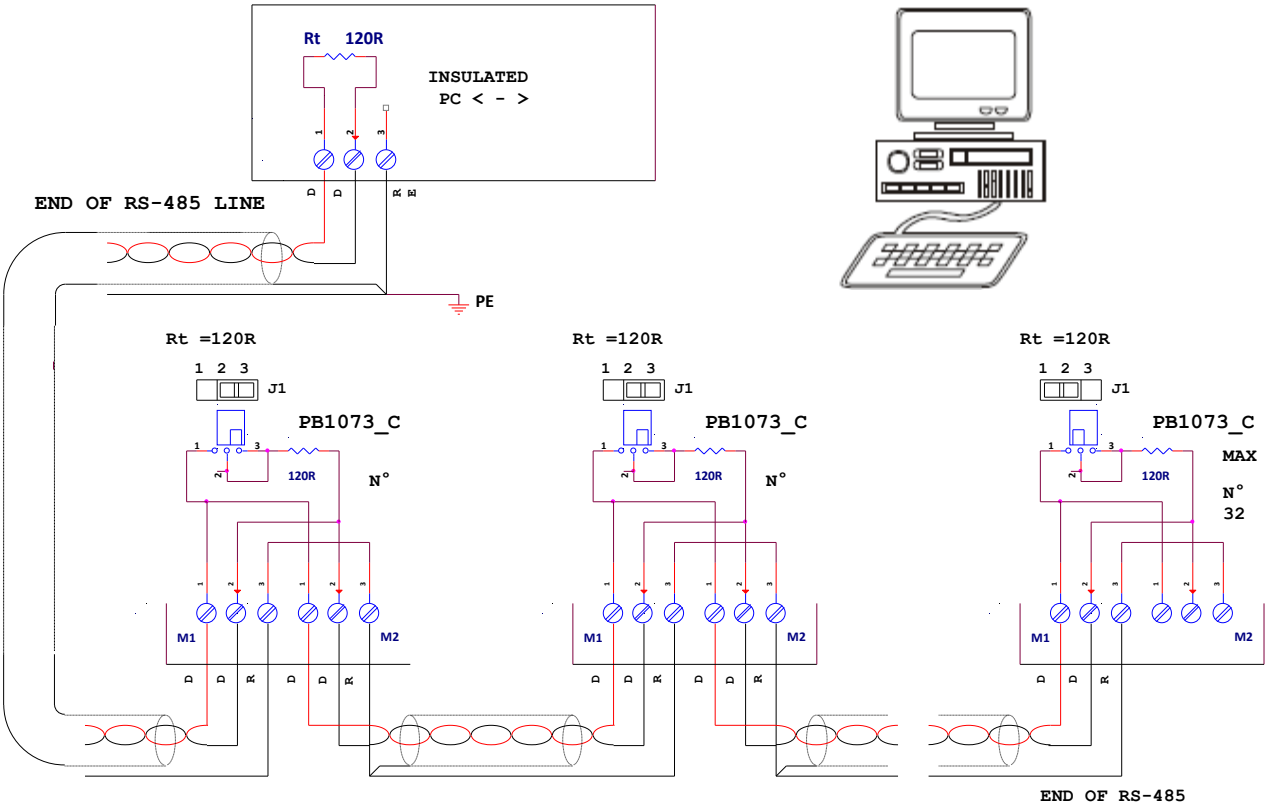

N.B.: It is of utmost importance to check the correct connection to the RS485 line;
All terminals “D+”, “D-” and “REF” shall be connected with the same cable.
The screening of the cable should be grounded and connected to REF only on the PC < - > RS485” side.

- The cable of the data line (the Modbus network) shall be connected by a controller to the subsequent, departing from the Master unit to end at the last device served; NO OTHER CABLING METHOD IS ALLOWED
- Connections should be set up with a cable suitable for outdoors and shall not exceed the maximum length of 1,000 mt.
- Make sure NOT TO mix the cable of the Modbus network with the other cables of the device, especially those with power voltage V~.
- The ends of the line (Master and last device slaved) should end with a 120 ohm resistance.
- Run the120 ohm ending onRS-485 < > PC Host adaptor; on the last device of the line, place J1 ON (2-1); on all intermediate units leave J1 on OFF (2-3).
- Connect the cable linking the two “REF” terminals only next to the Master station so that all stations are at the same potential, the PC Host.
- Ground the screen of the cable departing from the adaptor RS-485<> PC Host only next to the adaptor itself; The screen must only be connected to the PC Host side, as for the diagram.
- The cable shall be divided into segment, one for each section; connect the screen to the first section only on the adaptor side RS-485< > PC Host, and connect the screen to the second section only on the Slave N° 1 side and so on.

4.0 DISPLAY AND COMMAND PARTS

4.1 Display and Push-buttons

The device has a backlit LCD display with 4 lines, 20 characters per line and four keys for the functions: “UP”, “DOWN”, “ESCAPE”, “ENTER”. The latter are used to display and set parameters.

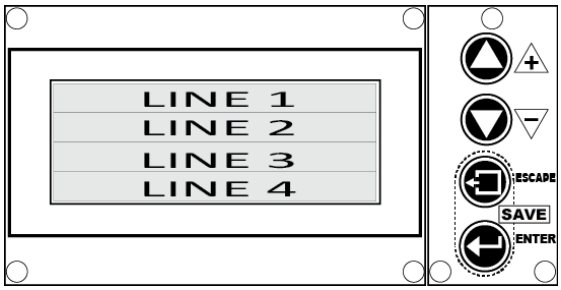

Once switched on, the screen will display the following for three seconds:

1	**AWS rel.X.Y**	Name of Builder, Model of Device, Release Software X.Y
2	**Water Spray**	Name of the Device
3	**Digital Controller**	
4	**S.Type 30 Relé 3**	Configuration indicating Default on site , N° and type of valves

After a few seconds the device is set up for command Valves Open/Close and is in the “DRY” mode (Spray not enabled), the following start page is displayed:

1	**---- Dry ---- HH. MM**	State of System: Dry, Spray not enabled **(*)**, RTC Hours And Minutes
2	**Pi 0.0 bar Com 1,0 V**	Input pressure 0.0 bar, Command Voltage 1.0 V
3	**T 18,5 °C Relè - - -**	Ambient temperature = 18.5 °C, Relay command outputs inserted: none
4	**0,00 l/m HHHH,MM**	Water flow in liters per minute, Total hours spray function

If the device is set up for the command of a modulating valve the following start page is displayed:

1	**---- Dry ---- HH. MM**	State of System: Dry, Spray not enabled **(*)**, RTC Hours And Minutes
2	**Pi 0.0 bar Po 0,0 bar**	Input pressure 0.0 bar, Output pressure 0.0 bar
3	**T 18,5 °C Sp 0,0 bar**	Ambient temperature = 18.5 °C, Set Point pressure SP = 0.0 bar
4	**0,00 l/m HHHH,MM**	Total value of liter counter (l/m), Overall value of the hour meter

On the other hand, if the device is configured for the command of two modulating valves, the following start page is displayed;

N.B. To display the start page, at whichever page, press “ ESCAPE” one or more times

1	**---- Dry ---- HH. MM**	State of System: Dry, Spray not enabled **(*)**, RTC Hours And Minutes
2	**Pi 0.0 Pm 0,0 Po 0,0**	Input pressure 0.0 bar, median pressure 0.0 bar, output pressure 0.0 bar
3	**T 18,5 °C Sp 0,0 bar**	Ambient temperature = 18.5 °C, Set Point pressure SP = 0.0 bar
4	**0,00 l/m HHHH,MM**	Total value of liter counter (l/m), Overall value of the hour meter

(*) N.B. The line N° 1 of the display is reserved for the Real Time Clock display and for the messages of the device's state

Reflecting the procedures for active function, it changes showing these messages:

1	**-- Wet Ready-- HH. MM**	Enabled: ambient temperature sufficient, Time of local clock
1	**-- Wet -- HH. MM**	Enabled and Ready to supply (only with (Modul.Valve) Time of local clock
1	**- Wet Work - HH. MM**	Spray in supply, Time of local clock
1	**--- Stop --- HH. MM**	Stop command present, Time of local clock
1	**Man.Drainage - HH. MM**	Manual cycle of ramps draining active, Time of local clock

4.2 Adjustment of display contrast

To adjust contrast of the LCD display press the first key " ENTER" and then the key "UP (+)" to increase or "DOWN (-)" to decrease; only line N°3 is changed on the display, informing user of the current "dimmer" level.



1	**---- XXXX ----**	State of System
2		
3	**LCD DIMMER 235**	value of current dimmer : from 0 to 255
4		

The value of the dimmer changes at steps of 5 units, from 0 to 255 in a circular way. The value of the contrast on the LCD display; for values higher than 190, the contrast is extremely low, these values should be avoided not to compromise reading.

4.3 configuration Dip-Switches: SW1

The device has 6 Dip Switches to activate special functions or use modes, preconfigured in the software or can be customized on request.

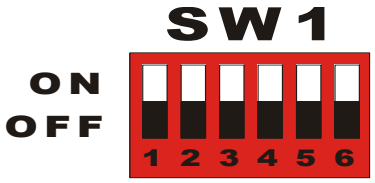

SW1	Meaning	
1	Reserved	
2	Reserved	
3	ON	Enables Alarm with S2 = Close (Stop) (see par. 3.3.2)
	OFF	Disables Alarm with S2 = Close (Stop)
4	ON	Stable ModBus forcing
	OFF	Temporary ModBus forcing (duration 10 minutes
5	Reserved	
6	ON	RL6 : automatic drainage electrovalve command (*)
	OFF	RL6 : supply pump command (*)

(*) N.B SW1-6 acts only if the "Spray Driver Type 30" default configuration is active (driving the spray tubing racks with 3 relays (see para. 6.3.1). With other configurations it has no effect.

4.4 Total Draining Activation

It is possible to activate the total draining of the plant at the end of season, operating alternatively and for at least two seconds as follows:

1. Simultaneously press the push-buttons " + " and " - " the keypad (see par. 4.1)
2. Press the SB2 push-button placed on the card (see par. 1.4.3, item 13)
3. Close through remote control terminal boards 1 and 2 of M2, or press the remote command (S7) connected to terminals 1 and 2 ofM2 (see par. 3.3.2)

Once activated, the following message appears on the first line of the display:

1		**Man.Drainage - HH. MM**

The outlet runs for the time set by the parameter "T Drain " (see chap.6). At the end the device returns to the previous function state. For further details see par. 5.4

N.B. The action of this command causes the total opening of the supply valve to the spray tubing ramps. If an upstream electrovalve to automatically close supply to the device is not present, the operator shall manually perform this operation beforehand.

4.5 Warning LEDS

These indicator LEDs when turned on activate the functions described in the following table.

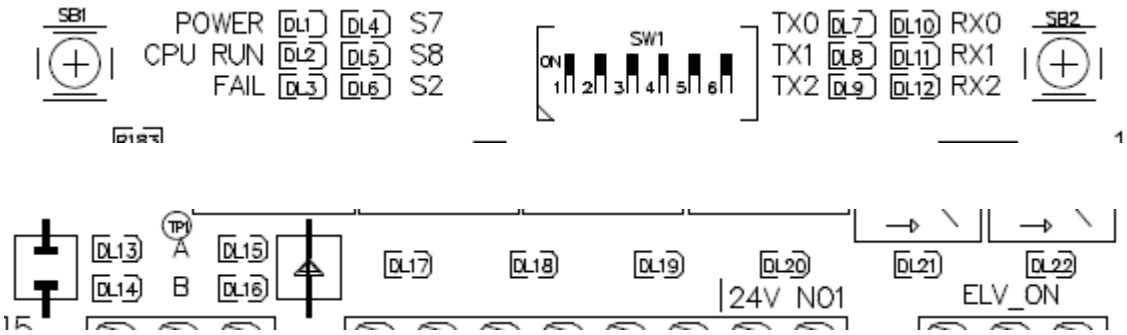

DL1	**Power**	**green**	ON = Electric input O.K.
			OFF = Electric input OFF
DL2	**CPU Run**	**green**	ON with intermittent flashing 1 Hz = Microcontroller regularly working
			OFF / ON /irregular flashing = Microcontroller not working
DL3	**Fail**	**red**	ON = FAIL: presence of one or more alarms, display message, see Cap.**7**
			OFF = all O.K.
DL4	**S7**	**yellow**	ON = manual drainage command present
			OFF= No command
DL5	**S8**	**yellow**	ON = impulse litre counter
			OFF= No command
DL6	**S2**	**yellow**	ON = Run allowed
			OFF = Forces the equipment in “Stand-By,” closes the supply valve of the active nozzles
DL7	**Tx0**	**yellow**	ON = Transmission output data on serial “0”
			OFF = No activity on serial “0”
DL8	**Tx1**	**yellow**	ON = Transmission output data on serial “1”
			OFF = No activity on serial “1”
DL9	**Tx2**	**yellow**	ON = Transmission output data on serial “2”
			OFF = No activity on serial “2”
DL10	**Rx0**	**yellow**	ON = Reception of input data on serial “0”
			OFF = No activity on serial “0”
DL11	**Rx1**	**yellow**	ON = Reception of input data on serial “1”
			OFF = No activity on serial “1”
DL12	**Rx2**	**yellow**	ON = Reception of input data on serial “2”
			OFF = No activity on serial “2”
DL13	**A_Open**	**yellow**	ON = Command OPENS for modulating three-way valve “A”
			OFF= No command
DL14	**B_Open**	**yellow**	ON = Command OPENS for modulating three-way valve “B”
			OFF= No command
DL15	**A_Close**	**yellow**	ON = Command CLOSES for modulating three-way valve “A”
			OFF= No command
DL16	**B_Close**	**yellow**	ON = Command CLOSES for modulating three-way valve “A”
			OFF= No command
DL17	**Out_3/Drain**	**green**	ON = Relay **RL3 ON**
			OFF = Relay RL3 OFF
DL18	**Out_2**	**green**	ON = Relay **RL4 ON**
			OFF = Relay RL4 OFF
DL19	**Out_1**	**green**	ON = Relay **RL5 ON**
			OFF = Relay RL5 OFF
DL20	**Pump**	**green**	ON = Relay **RL6 ON**
			OFF = Relay RL6 OFF
DL21	**Elv_On**	**green**	ON = Relay **RL1 ON** Spray supply, one or more valves open
			OFF = Relay RL1 OFF Spray not running
DL22	**Allarm**	**green**	ON = Relay **RL2 ON** Alarms absent, normal function
			OFF = Relay RL2 OFF presence of one or more alarms

5.0 FUNCTION PROCEDURES

5.1 ACTIVATION CONDITIONS

The spray starts to function if the following preliminary conditions are met, listed in decreasing order of priority. The values referred to below and the mode for their reading are described in chapters 6 and 4 .

1- Start / Stop command (S2): is a contact connected between terminals 5 and 6 of the M2 terminal board (see par. 3.3.2)

- If Closed: The spray is disabled, on the first line of the display the message "--- Stop ---" appears
- If Open: The spray is enabled to function, on the first line of the display one of the messages described later appears. **If terminals 5 and 6 of M2 are free, the spray is enabled to function.**

2- Ambient Temperature (T) measured by the NTS sensor connected to Input IN2 (see par. 3.3.1).
If T < TDry: the spray is disabled, on the first line of the display the following message appears **"--- Dry ---"**
If T > TDry: the spray is enabled to function, on the first line of the display the following message appears **"-Wet Ready-"** or **"--- Wet ---"** or "-**Wet Work**-" based on the conditions described here below.

If both of the previous conditions have occurred, the response of the device depends on the type of valves used (Open/Close or Modulating) and the value of the command received at the input.

5.2 SUPPLY WITH OPEN/CLOSE VALVES

Occurs following the analog signal 1-10 V at the IN1 input (see par. 3.3.1), the display is converted into the size "**Com**" **(V)**, and starts off up to 3 relays in sequence to power the Open/Close valves of the spray tubing ramps and the relay to command the pump.

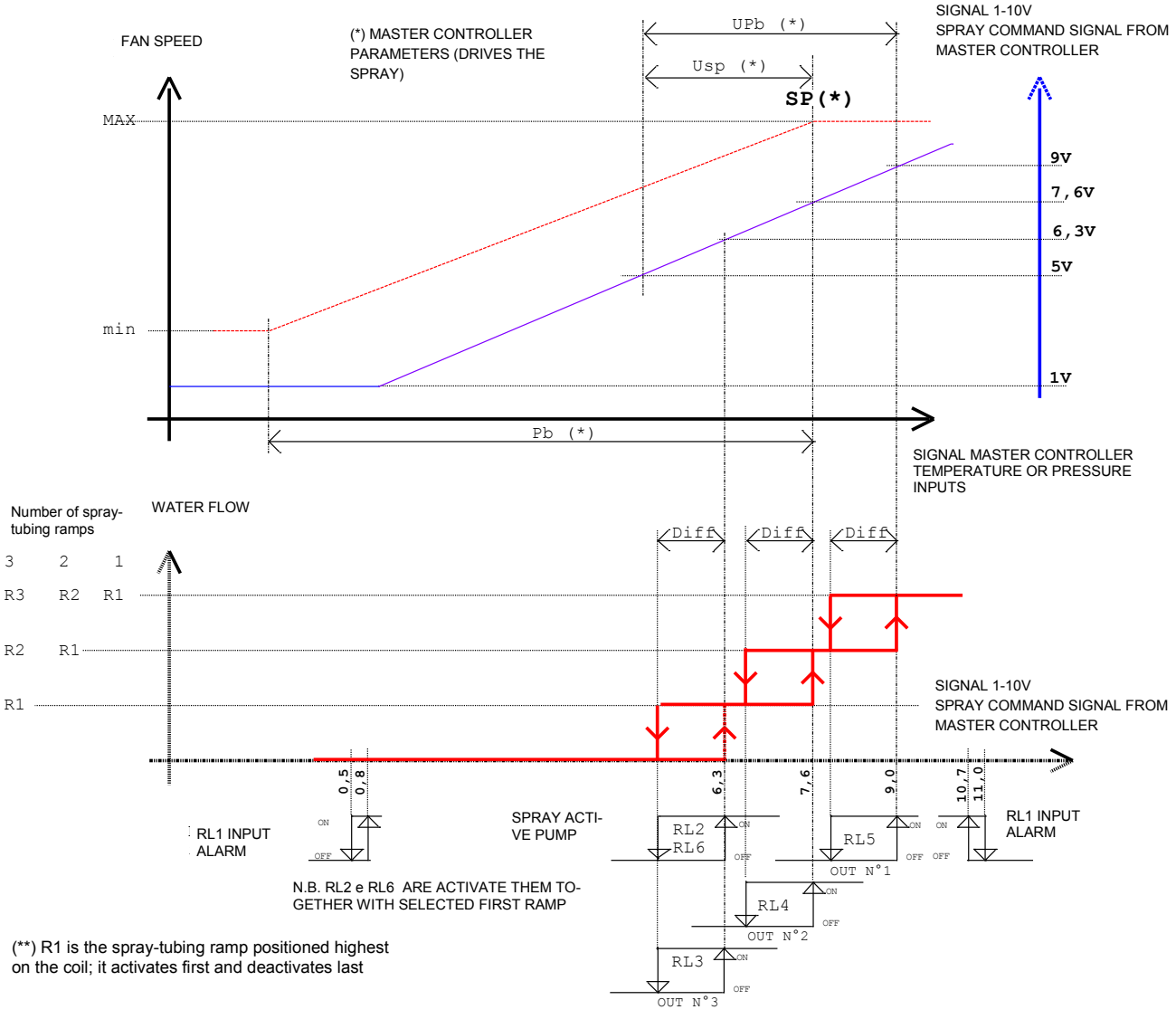

Cotroller Master		Unit Spray "Diff."			
sensor	**Upb**	**10% (min)**	**100% (max)**	**80% (default)**	**U.M.**
STE	2,4	0,18	1,8	1,44	°C
0-15bar	0,7	0,05	0,52	0,42	bar
0-25bar	1,2	0,09	0,9	0,72	bar
0-45bar	1,5	0,11	1,12	0,9	bar

U.M (intended as abbreviation of Unit of Measurement)

Display			RL1	RL2	RL3	RL4	RL5	RL6
Com = IN1 (Vdc) D = Diff	**Status Message (*)**	**Relè**	**Alarm**	**Spray On**	**Ramp N°3**	**Ramp N°2**	**Ramp N°1**	**Pump**
IN1 < 0,8	IN1 Command Under	- - -	-	-	-	-	-	-
0,8 < IN1 < 6,3	Wet Ready	- - -	ON	-	-	-	-	-
6,3 < IN1 < 7,6	Wet Work	3 - -	ON	ON	ON	-	-	ON
7,6 < IN1 < 9,0	"	3 2 -	ON	ON	ON	ON	-	ON
9,0 < IN1 < 11,0	"	3 2 1	ON	ON	ON	ON	ON	ON
11,0 < IN1	IN1 Command Over	- - -	-	-	-	-	-	-
9,0-D < IN1 < 10,7	Wet Work	3 2 1	ON	ON	ON	ON	ON	ON
7,6-D < IN1 < 9,0-D	"	3 2 -	ON	ON	ON	ON	-	ON
6,3-D < IN1 < 7,6-D	"	3 - -	ON	ON	ON	-	-	ON
0,5 < IN1 < 6,3-D	Wet Ready	- - -	ON	-	-	-	-	-
IN1 < 0,5	IN1 Command Under	- - -	-	-	-	-	-	-

- = OFF

(*) If the pressure of the water supply is not sufficient (**Pi < P min**) the alarm message "**Main Pressure Low**" will appear on the first line of the display (for alarms see chap.7.0)

5.3 SUPPLY WITH MODULATING VALVES

Occurs following the analog signal of 1-10V in the Output IN1 (see par. 3.3.1), on the display it is converted to the value “SP” (bar) Set Point nozzle pressure, activating 1 or 2 modulating valves to supply the spray tubing ramps and 1 relay to command the pump.

In the case of 2 modulating valves, the pressure drop is automatically subdivided in the best possible way between two valves.

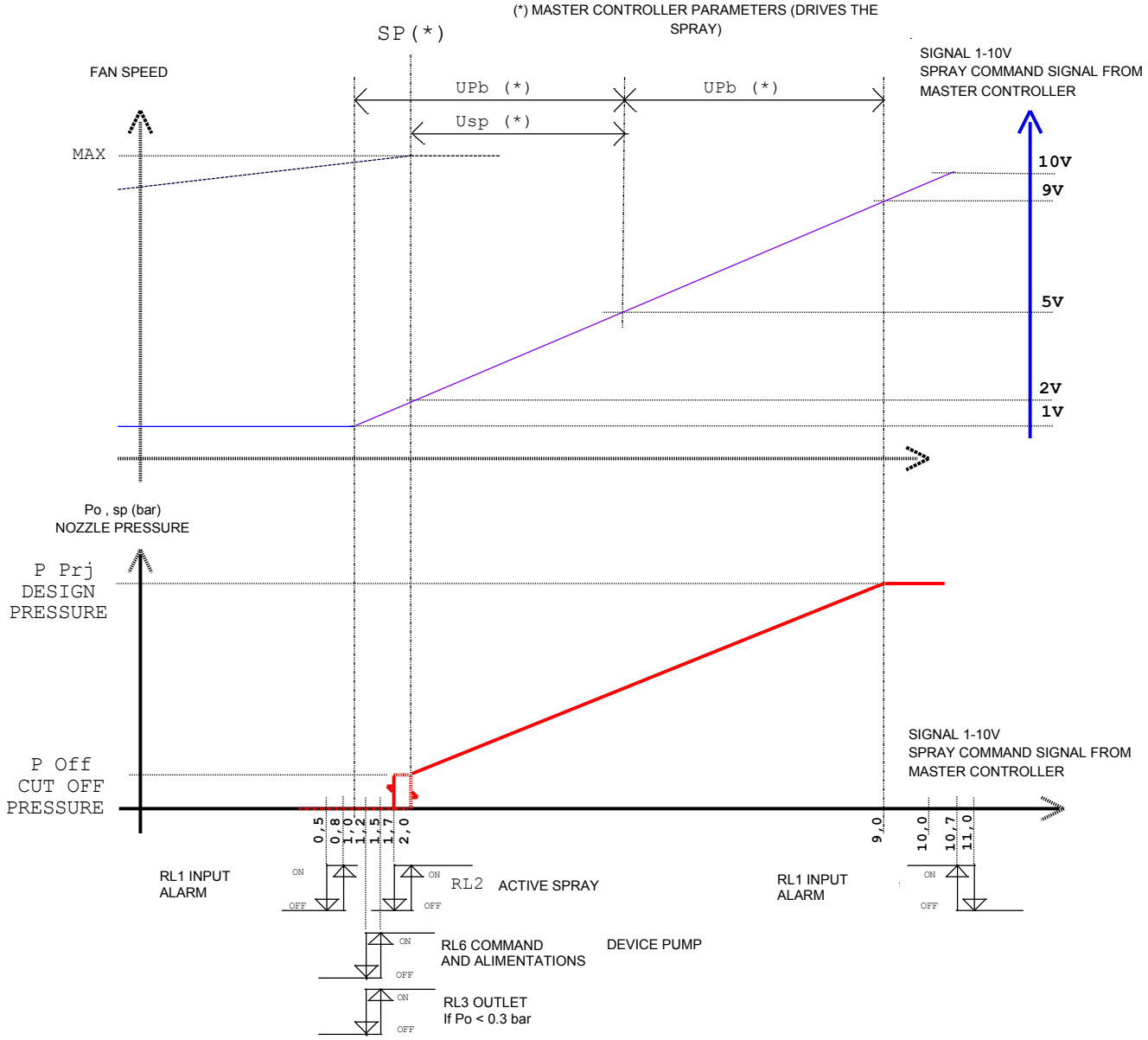

N.B. The diagrams express the conditions for setting the parameters based on the adjustment of the modulating valves. The default parameters present in controllers WMC2 , AURT and ARUS are such as to maintain, under regime conditions, the set point (SP) set.

N.B. (intended as abbreviation of Nota Bene)

IN1 (Vdc)	Display			RL1	RL2	RL3	RL6	Modul. Valve	
	Status Message (*)	SP (bar)	Po (bar)	Alarm	Spray On	Disc h	Pump	A	B
IN1 < 0,8	IN1 Command Under	0	0	-	-	-	-	Ch	Ch
0,8 < IN1 < 1,5	Wet Ready	0	0	ON	-	-	-	Ch	Ch
1,5 < IN1 < 2,0	Wet	0	0	ON	-	ON	ON	Ch	Ch
2,0	Wet Work	P Off	0	ON	-	ON	ON	Reg	Reg
2,0	Wet Work	P Off	Po>0 bar	ON	ON	ON	ON	Reg	Reg
2,0 < IN1 < 9,0	Wet Work	P	P	ON	ON	ON	ON	Reg	Reg
9,0	Wet Work	P Prj	P Prj	ON	ON	ON	ON	Reg	Reg
9,0 < IN1 < 11,0	Wet Work	P Prj	P Prj	ON	ON	ON	ON	Reg	Reg
11,0 < IN1	IN1 Command Over	P Prj	0	-	-	-	-	Ch	Ch
IN1 < 10,7	Wet Work	P Prj	P Prj	ON	ON	ON	ON	Reg	Reg
2,0 < IN1 < 9,0	Wet Work	P	P	ON	ON	ON	ON	Reg	Reg
2.0	Wet Work	P Off	P Off	ON	ON	ON	ON	Reg	Reg
1,7	Wet	0	P Off	ON	-	ON	ON	Ch	Ch
1,7	Wet	0	?	ON	-	ON	ON	Ch	Ch
1,2 < IN1 < 1,7	Wet	0	?	ON	-	ON	ON	Ch	Ch
IN1 < 1,2 (**)	Wet Ready	0	Po<0,3bar	ON	-	-	-	Ch	Ch
0,5 < IN1 < 1,2	Wet Ready	0	0	ON	-	-	-	Ch	Ch
IN1 < 0,5	IN1 Command Under	0	0	-	-	-	-	Ch	Ch

- = OFF

P = value of pressure defined by IN1, ranging between P Prj and P OFF

? = during this stage the Po value no longer depends on the SP value, but on the quantity of residual water which has remained in the spray tubing ramps

Ch = command modulating valve closing

Reg = command modulating valve in regulation (opening/closing)

(*) If the intake water pressure is not sufficient (Pi < P Min) the alarm message “Main Pressure Low” appears on the first line of the display (for alarms see chap. 7.0).

(**) When the command signal IN1 < 1.2 V, after the “D Poff” time has ended the RL2 and RL6 relays de-energize. During this lapse of time, if required, it is possible to go back to regulation.

5.4 DRAINING WATER FROM THE UNIT

The device is set up for the following draining modes of the spray tubing ramps and for the entire device. The various options can be used based on the configurations present in the hydraulic plant, on the type of valves used and on the type of parameter settings input. The commands on the outputs depend on the type of valves used, see the following diagrams:

5.4.1 TOTAL DRAINING OF THE DEVICE ("MAN. DRAINAGE")

Ensures that at end of season, all the residual water contained in the device can be drained. It can be activated by one of the modes described at par.4.4, it opens the intake valves for a time determined by the parameter "T Drain = Drainage Time" . After T Drain time has ended, the device switches back to the previous state of function.

N°1, 2, 3 OPEN/CLOSE VALVES

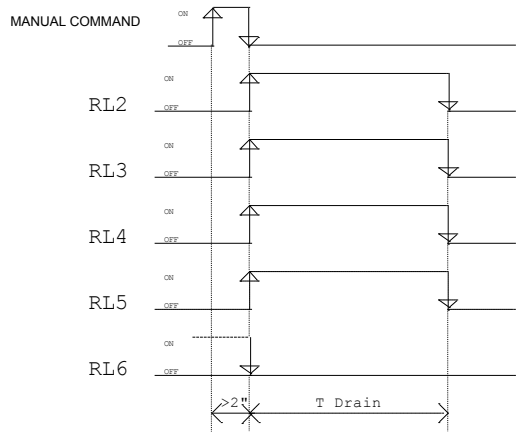

N°1, 2 MODULATING VALVES

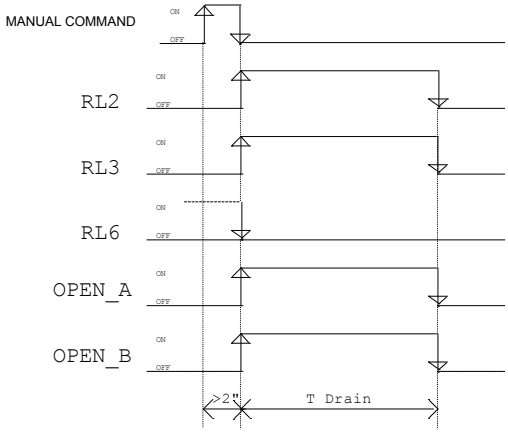

N.B. If an upstream electrovalve to automatically close supply to the device is not present, the user shall manually perform this operation beforehand.

5.4.2 AUTOMATIC DRAINAGE: TIMED DRAINING OF THE SPRAY TUBING RAMPS ("AUT. DRAINAGE")

With a periodic frequency chosen by the operator, through the parameters "DT= Drain Time" and "DI= Drain Interval" see chap.6, it closes the supply valves and opens the drainage valves for a time established by the T Drain parameter. After the T Drain time has ended, the device returns to the previous state of function. The electrical connections shall be made as described in paragraphs 3.3.5 , 3.3.6.5 and 3.3.6.6 .

N°1, 2 OPEN/CLOSE VALVES

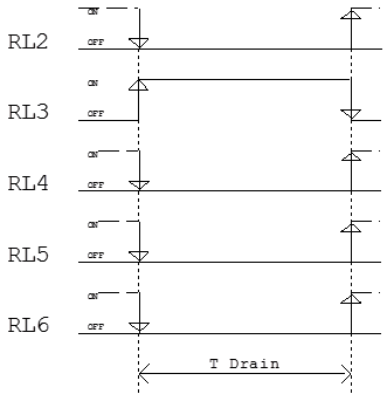

N°3 OPEN CLOSE VALVES WITHOUT PUMP COMMAND

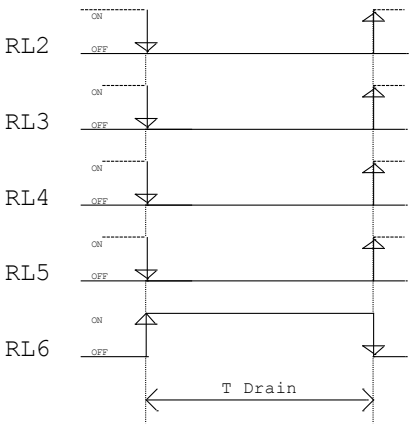

N°1, 2 MODULATING VALVES

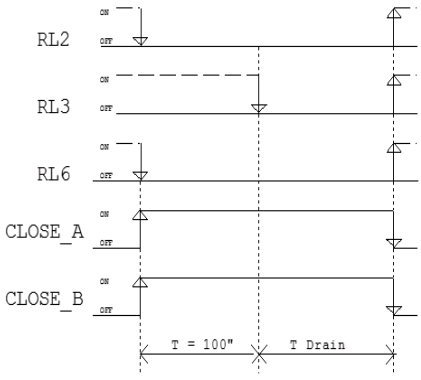

5.4.3 DRAINING THE SPRAY TUBING RAMPS AT THE END OF EVERY SUPPLY

Opening of the drainage valves after each closure of the water supply to the spray tubing ramps. Electrical connections shall be made as described in paragraphs 3.3.5 and 3.3.6 (excluding par. 3.3.6.5 and 3.3.6.6) .

6.0 PARAMETERS

The function of the device is guided by a series of parameters whose values can be read on the display.

Some of these are read-only, others can be freely modified to adapt to the function of the device and requirements of the user. To display and change the value see the modalities described in the following pages.

6.1 List of Parameters

Starting from the first page (see par. 3.1) by pressing keys “UP” or “DOWN,” the following parameters are displayed; the boldface border delimits the parameters found in the same page of the display, in the three lines reserved for them.

Initials	Display: Valve/and Open/Close	Display: Valve/and Modulators	Description
			Start page: main information for the user, depends on the configuration of the valve command
	……	**……**	State message of the device
	hh.mm	**hh.mm**	Current time of the Real Time Clock) (hours, minutes)
Pi	**Pi**	**Pi**	Supply line pressure of device (bar)
Pm	**-**	**Pm**	Intermediate pressure (bar) **(*)**
Po	**-**	**Po**	Outlet pressure to the nozzles (bar)
Com	**Com**	**-**	Value of the analog command 1-10 V to Output IN1
T	**T**	**T**	Ambient temperature (°C)
Relè	**Relè - - -**	**-**	N° of outputs of active relays
Sp	**-**	**Sp**	Set point value of Output pressure to the nozzles (bar)
	xxx l/m	**xxx l/m**	Water capacity of the spray device (litres/minute) (only with optional litre counters)
	hhh,mm	**hhh,mm**	Total hours and minutes of spray supply
T Dry	Dry/Wet Temp.		Temperature of switching threshold Dry/Wet (Wet = Spray Active)
T Ice	Ice Allarm T.		Temperature of switching threshold ice alarm
Diff	Differential	-	Differential of On/Off switch on the command of each Electrovalve
P Prj	Design Pressure		Pressure **Line** of Design (can be reached with IN1 = 10 V)
P Min	Min Line Pressure		Pressure **Line** Minimum, threshold activation Spray Stop (PMin < Prj)
P Off	-	Cut-Off Pres	Cut-off value of the **output pressure** to supply the sprays
D Poff	Pump OFF Delay		Delay of the shutdown pump in the switch off stage
T Drain	Drainage Time		Duration of the opening of the outlet valve
Pause	Pause		Maximum delay time between two subsequent commands at the output
Filt	Command Filter		Filter on the 1-10 V command signal , N° of samples used
DT	Drain Time		Time and minute for the first Automatic Drainage activation
DI	Drain Interval		Frequency of repetition in hours of Automatic drainage (**0** : automatic drainage disabled)
	Spray Driver Type		TType And N° of valves used to adjust the water
	Flow Counter pulse		Measurer of water capacity: constant for conversion litres by impulse
	IN 3 Swing		IN3 (supply line pressure) pressure of Full Scale of the transducer used
		IN 4 Swing	IN4 (pressure of nozzles) Full Scale pressure of transducer used
		IN 5 Swing	IN5 (intermediate pressure) Full Scale pressure of the transducer used **(*)**
	Alarm input command		Alarm on command signal 1-10V **(Com 1 < 1V)** , Output IN1
	Allarm Ice Temperature		Ice Alarm (**T < T Ice**) , Input IN2
	Allarm Line Pressure		Alarm Pressure of Line (**Pi < 0.85 X P Prj**), input IN3
P		P	Constant Proportional PID Controller: spray pressure
I		I	Constant Integral PID Controller: spray pressure
D		D	Constant Derivative PID Controller: spray pressure
Ti		Ti	Integration time
Td		Td	Derivation time
MBtype	ModBus Address		Address of the node on ModBus RTU network
MBrate	MBrate		Baud Rate (speed of communication)
MBaddr	MBtype		Communication parameters
	Real Time Clock		Page Real Time Clock
TLogic	Logic Board Temp.(°C)		Instantaneous temperature of the command board in °C

(*) Parameter visible only with N°2 modulating valves

6.2 Values of Measured Quantities and Parameters

6.2.1 Non-modifiable measured quantities

Initials	Display		Value		units of measure-ment
	Open/Close Valve/s	Valve/and Modulators	min	Max	
Pi	Supply line pressure of the device (IN3)		0	30	bar
Pm	-	Intermediate pressure (IN5)	0	30	bar
Po	-	Pressure of outlet tom nozzles (IN4)	0	30	bar
Com	Analog command 1-10V (IN1)	-	0	11	V
Sp	-	Set Point of outlet pressure to nozzles	0	20	bar
T	Ambient temperature		-20	+100	°C
TLogic	Logic Board Temp.		-20	+100	°C

Initials	Display		Value		Unit of Meas-urement
	Open/Close Valve/s	Valve/and Modulators	min	Max	
T Dry	Dry/Wet Temperature		10	40	°C
T Ice	Ice Alarm Temperature		2	12	°C
Diff	Differential	-	10	100	%
P Prj	Design Pressure (Alarm : 0.85X P Pr)		2	20	bar
P min	Min. Line Pressure (Threshold Spray Stop)		2	10	bar
P OFF	-	Cut-Off Pressure	0.1	1.0	bar
D Poff	Pump OFF Delay		1.5	60.0	s
TDrain	Drainage Time		1.0	600.0	s
Pause	Pause		0.5	300	s
Filt	Command Filter (Sample Number)		0	100	N
DT	Drain Time		0 , 0	23 , 59	hh mm
DI	Drain Interval		0	720	hhh
	S. Type (Spray Driver Type)		10 Relay		-
			20 Relay		-
			30 Relay		-
			40 V. Mod. 1		-
			50 V. Mod. 2		-
	Flow Counter Constant		1	30	dL
	IN3 Swing 0…….		5	30	bar
	-	IN4 Swing 0…….	5	30	bar
	-	IN5 Swing 0…….	5	30	bar
Alarms	IN1 Input Command		Bypass	Active	-
	IN2 Ice Temperature		Bypass	Active	-
	IN3 Line Pressure		Bypass	Active	-
P		P (Constant Proportional)	0.5	5.0	bar
I		I (Constant Integral)	0	1000	
D		D (Constant Derivative)	0	1000	
ti		ti (Value of Integration Time)	0	100	s
td		td (Value of Derivation Time)	0	100	s
MBaddr	ModBus Address		1	247	-
MBrate	MBrate		4800, 9600, 19200, 38400		-
MBtype	Type		8b + 1s EVEN P.		-
			8b + 1s ODD P.		-
			8b + 1s NO P.		-

6.3 Function Parameters

6.3.1 "Default" Configurations

Initials	Display	Spray Driver Type					units of measurement.
		10	**20**	**30**	**40**	**50**	
T Dry	Dry/Wet Temperature	27	27	27	27	27	°C
T Ice	Ice Alarm Temperature	8	8	8	8	8	°C
Diff	Differential	80	80	80	-	-	%
P Prj	Design Pressure (Alarm : 0.85X P Prj)	2.5	2.5	2.5	8	16	bar
P min	Min. Line Pressure (Threshold Spray Stop)	1.5	1.5	1.5	4.8	9.6	bar
P OFF	Cut-OFF Pressure	-	-	-	0.3	0.3	bar
D Poff	Pump OFF Delay	4	4	4	4	4	s
TDrain	Drainage Time	300	300	300	300	300	s
Pause	Pause	120	120	120	8	8	s
Filt %	Command Filter (Sample Number)	10	10	10	10	10	N
DT	Drain Time	22 , 00					hh MM
DI	Drain Interval	24					hhh
	Spray Driver Type	**10 Relay 1**	**20 Relay 2**	**30 Relay 3**	**40 V.Mod 1**	**50 V.Mod 2**	
	Flow Counter Constant	10	10	10	10	10	dL
	IN3 Swing (Press. Range)	25	25	25	15	25	bar
	IN4 Swing (Press. Range)	-	-	-	15	25	bar
	IN5 Swing (Press. Range)	-	-	-	-	25	bar
	Alarm Input Command	Active	Active	Active	Active	Active	-
	Alarm Ice Temperature	Active	Active	Active	Active	Active	-
	Alarm Line Pressure	Active	Active	Active	Active	Active	-
P	**P** (Constant Proportional)	-	-	-	2	2	bar
I	**I** (Constant Integral)	-	-	-	0	0	-
D	**D** (Constant Derivative)	-	-	-	0	0	-
ti	ti (Value of Integration Time)	-	-	-	1	1	s
td	td (Value of Derivation Time)	-	-	-	10	10	s
MBtype	ModBus Address	247					-
MBrate	Baud Brate	9600					-
MBtype	Type	8 bit 1 stop Even parity					-

Indicates default configuration

Spray driver type

10 —> Machine to be controlled with 1 OPEN/CLOSE valve

20 —> Machine to be controlled with 2 OPEN/CLOSE valve

30 —> Machine to be controlled with 3 OPEN/CLOSE valves

40 —> Machine to be controlled with 1 modulating valve

50 —> Machine to be controlled with 2 modulating valves

Set the correct configuration before starting up the machine to be controlled

6.3.2 Recall Default Configurations

The following procedure allows you to choose one configuration of parameters among those available seen in par. 6.3.1, replacing it with the factory configuration "**20**" .

A- When the device is off, simultaneously press the keys "**ESCAPE**" and "**ENTER**" .
B- Connect the electric power of the controller, or if already connected, press the "reset" key, the screen will display the following:

1	**----- Operation Mode -----**	Stato del State of System: Change the work configuration
2	**--- Now ---**	
3	**Available**	
4	**ENT:select ESC:exit**	Key "ENTER" : select, key "ESCAPE" : exit and go back to start page

C- Simultaneously release the keys "**ESCAPE** " and "**ENTER**, "the controller will switch on and after the welcome message the screen will display the following:

1	**----- Operation Mode -----**	State of System: Change the work configuration
2	**S.Type 20 Relé 2**	Initials of current configuration as for table of par. 6.3.1
3	**IN3 = 25 bar**	Full scale transducer of pressure used on IN3 (intake)
4	**ENT:select ESC:exit**	Key "ENTER" : select, key "ESCAPE" : exit and go back to start page

D- By pressing "**UP**" and "**DOWN** " the lines **N°2** and **N°3** will be displayed showing the available functions, see par. 6.3.1
E- Once the required configuration has been chosen, press "**ENTER**," the following will be displayed :

1	**----- Operation Mode -----**	StatState of System: Change the work configuration
2	**S.Type 50 V.Mod 2**	Initials of current configuration as for table of par. 6.3.1
3	**I3=25 I4=25 I5=25 bar**	Full Scale transducers of pressure used
4	**ENT+ESC: save**	Press keys "ENTER" + "ESCAPE" to save the new configuration

F- To exit and cancel the changes press **ESCAPE , to return to point (B) .**
G- To confirm the choice press keys **ENTER + ESCAPE** simultaneously: on line N°4 of the screen the following is displayed "**Updating, please wait**". The configuration chosen will be saved and immediately used, **replacing the previous one.**

1	**----- Operation Mode -----**	State of System: Change the work configuration
2	**S.Type 50 V.Mod 2**	Initials of current configuration as for table of par. 6.3.1 and par. 6.3.1
3	**I3=25 I4=25 I5=25 bar**	Full Scale transducers of pressure used
4	**Updating: please wait**	Message for the operator

The controller enters adjustment mode and the screen will display the start page (see par. 4.1)

6.4 Display parameters

A - Starting from the start page (see par. 4.1) by pressing keys "**UP**" or "DOWN" the following pages containing the values of the parameters are displayed in circular sequence. for example by pressing "UP" the following is displayed:

1	**---- Dry ---- HH. MM**	State of System: Dry, Spray non Certified, Hours : And Minutes : RTC
2	**Dry-Wet Temp. 27,0 °C**	Switching temperature Dry/Wet: 27.0 °C
3	**Ice Alarm Temp. 8.0 °C**	Ice alarm temperature: lower limit ambient temperature: 8.0°C
4	**Differential 80 %**	Open/Close switching differential for each valve **(*)**

(*)Viewable only with S.Type 10 , 20 , 30 (Valves Open/Close)

1	---- Dry ---- HH. MM	
2	**Design Pres. 7,5 bar**	Pressure line nominal or of design: 7.5 bar (Alarm : **0.85X Design Pres.**
3	**Min Line Pres. 6,0 bar**	Minimum value line pressure: 6.0 bar (Threshold Spray Stop)
4	**CutOff Pres. 0,1 bar**	Minimum output pressure to the nozzles (min on the nozzles) 0.1 bar **(*)**

(*) Visible only with S. Type 40 , 50 (Modulating Valves)

1	---- Dry ---- HH. MM	
2	**Pump Off Delay 4,0 s**	Delay time for pump stop/closure water intake
3	**Drainage Time 300 s**	Duration of open time outlet valve
4	**Pause 8,0 s**	(Maximum) delay time between two commands following the outlet**(*)**

(*) Variable only with S. Type 40 , 50 (Modulating Valves) otherwise fixed

1	---- Dry ---- HH. MM	
2	**Command Filter 5 N**	Time filter on the Spray command : number of samples mediated
3	**Drain Time hh. mm**	Time and minute before activating the automatic drainage
4	**Drain Int hhh**	Frequency of automatic drainage activation (if = 0 : automatic drainage disabled)

1	---- Dry ---- HH. MM	
2	**IN3 Swing 0 25 bar**	Full Scale of the pressure transducer at input IN3, in bar
3	**IN4 Swing 0 25 bar**	Full Scale of the pressure transducer at input IN4, IN in bar **(*)**
4	**IN5 Swing 0 25 bar**	Full Scale of the pressure transducer at input IN5, in bar **(*)**

1	---- Dry ---- HH. MM	
2	**Alarm In Comm.BYPASS**	Alarm on command signal 1-10V **(Com 1 < 1V)** , IN1 : CUT OUT
3	**Alarm Ice tem ACTIVE**	Ice Alarm (**T < T Ice**) , IN2 : INPUT
4	**Alarm Line Pr. ACTIVE**	Alarm supply line pressure (**Pi < 0.85 X P Prj**), IN3 : INPUT ON

1	---- Dry ---- HH. MM	
2	**P: X.X bar - PID -**	Parameters PID , P = Proportional Band
3	**I: XX.X Ti: XX.X s**	Parameters PID , I= Integral Factor, ti= Value of Integration Time (s)
4	**D: XX.X Td: XX.X s**	Parameters PID , I= Derived Factor, ti= Derivation Value Time (s)

1	---- Dry ---- HH. MM	
2	**Modbus Address 247**	Address of the node on ModBus RTU network
3	**Baud rate 9600**	Baud Rate (speed of communication)
4	**8bit + 1stop EVEN par.**	Communication parameters

1	---- Dry ---- HH. MM	
2	**Real Time Clock**	Real Time Clock
3	**16:01:01 01/08/2011**	HH:MM:SS DD/MM/YY
4		

1	---- Dry ---- HH. MM	
2	**Logic Board Temp (°C)**	Temperature of the logic card
3	**TLogic 30,6**	TLogic = 40.6 °C
4		

B - Back to point "A".

6.5 Change of Parameters

A - When the display shows the start page (if not there, press "**ESCAPE"** key), simultaneously pressing the "**ENTER**" and "**ESCAPE"** keys for a moment and the screen will display the first item of the menu to change parameters:

1	**---- Configuration ----**	Function Mode: Configuration and setting parameters
2	**1: SPRAY Parameters**	Sub Menu 1: Spray Parameters
3		
4	**ENT: select ESC: exit**	Programming suggestions

B - Press the key "ENT " to enter the sub menu "Spray Parameters" (for further details see 6.3.1).
C - While press keys "**UP" or "DOWN**" to scroll to the other submenus available on line N° 2 of the display:

2	**2: SETUP Parameters**	Submenu 2: Configuration parameters
2	**3: Programmable Alarm**	Submenu 3: Enabling Programmable Alarms
2	**4: PID Parameters**	Submenu 4: Parameters PID Controller
2	**5: MODBUS Parameters**	Submenu 5: Parameters for Modbus communication with PC
2	**6: R.T. CLOCK Setup**	Submenu 6: Adjustment of internal Clock (RTC: Real Time Clock)
2	**7: Manual Commands**	Submenu 7: Manual commands of outlets

D - When the required submenu is found, to access press "**ENTER**".

6.5.1 "SPRAY Parameters"

A - Starting from the selection page of submenu N°1:

1	**---- Configuration ----**	Function Mode: Configuration and setting parameters
2	**1: SPRAY Parameters**	Submenu 1: Spray Parameters
3		
4	**ENT: select ESC: exit**	Programming suggestions

B - Press key "ENT " to enter submenu N°1: "Spray Parameters" the first item is displayed:

1	**---- Setting choice ----**	Message for the operator: "Parameter selected"
2	**1.1: Dry-Wet Temper.**	Switching temperature Dry/Wet 27.0 °C
3	**T Dry 27.0 Cels**	Value T Dry: 27.0 °C
4		

C - With keys " **UP "or "DOWN** " the lines N°2 and N°3 with descriptions and values of the changeable parameters are displayed with relative values:

2	**1.2: Ice Alarm Temp.**	Temperature ice alarm: lower limit of ambient temperature
3	**T Ice 8.0 Cels**	Value T Ice: 8.0 °C
2	**1.3: % Differential 3V**	Open/Close switching differential for each valve
3	**Differ. 80%**	Differential value: 80%

2	**1.4: Design Pressure**	Nominal or design line pressure
3	**P Prj 2.5 bar**	Value P Prj: 2.5 bar, Alarm = 2.125 bar (**0.85 x Design Pres.**)
2	**1.5: Min Line Press.**	Minimum value line pressure: 6.0 bar (Threshold Spray Stop)
3	**P Min 1.5 bar**	Value P min: 1.5 bar
2	**1.6: CutOff Pressure.**	Minimum output pressure before Cut-Off **(*)**
3	**P Off 0.3 bar**	Value P Off: 0.3 bar
2	**1.7: Pump OFF Delay**	Delay time for shutdown pump/closure water intake
3	**D Poff 4.0 sec**	Value D Poff: 4.0 sec
2	**1.8: Drainage Time**	Duration valve outlet opening
3	**TDrain 300 sec**	Value T Drain : 300 sec.
2	**1.9: Pause**	(Maximum) delay time between two following commands at the outlet
3	**Pause 120 sec**	Value D Comm: 120 sec
2	**1.10: Command Filter**	Time filter on the Spray command : number of samples mediated
3	**Filter 10N**	Number of samples mediated: 10
2	**1.11: Drain Time**	Hour and minute before the first automatic drainage is switched on
3	**D T H 22 M 0**	Hours : 22 , Minutes 0
2	**1.12: Drain Interval**	Frequency of automatic drainage switch on in hours : (if = 0 : automatic drainage disabled
3	**D I 24**	24 hours

N.B. When the “Spray Driver Type 30” default configuration is active (driving the spray tubing racks with 3 relays, see para. 6.3.1) and if DSW1-6 is in the “OFF” position, (RL6 : pump command, see para. 4.0) , the automatic drainage function is not available and the following appears:

2	**1.11: Drain Time**	Hour and minute before the first automatic drainage is switched on
3	**function not allowed**	Function not allowed
2	**1.12: Drain Interval**	Frequency of automatic drainage switch on in hours : (if = 0 : automatic drainage disabled
3	**function not allowed**	Function not allowed

To activate the automatic drainage function in this case, follow the wiring instructions shown in paragraphs 3.3.6.7 and 3.3.6.8, put DSW1-6 in the “On” position and, if requested, modify the DT and DI parameter values, seen above.

D - Select the required parameter, i.e.: "1**.4: Design Pressure**," press " **ENTER**"; the following page is displayed

1	**---- Value change ----**	Message for the operator: "change the value" of the selected parameter
2	**1.4: Design Pressure**	Pressure of the design: maximum outlet pressure to the sprays
3	**P Prj 5.5 bar**	Value P Prj: 5.5 bar
4	**ENT: save ESC: abort**	Programming suggestions

E - With keys "**UP" or "DOWN**" the value in line N°3 is changed and brought to the required value. By keeping the key pressed you can accelerate the setting.

F- By pressing " **ESCAPE"** the setting made is cancelled and it goes back to point (D), while by pressing " ENTER" the new value setting is confirmed, returning to point (C). If another parameter needs to be changed, proceed as above.

G - After setting the new values, to confirm the choices made and save the changed values, simultaneously press the keys **ENTER"+"ESCAPE";** the following temporary message will be displayed:

1		
2	**Saving New Values**	Saving new data in progress, wait
3	**Plase Wait**	N.B. This message reminds the operator that saving new data
4		has not yet occurred

H - Then you exit changes of parameters and go back to the **start page**.

I - To cancel choices made and restore previous values press the key "**ESCAPE,"** the temporary message is displayed :

1	**Restoring Old Values**	Restore old parameter values
2	**Changed Values**	The values changed are discarded
3	**Discarded**	
4		

L - Immediately after the page goes back to (A), to the of the specific submenu

6.5.2 "SETUP Parameters"

This submenu allows for reading and changing the function parameters of the device

A - Partendo dalla corrispondente pagina di selezione del sottomenù:

1	**---- Configuration ----**	Function Mode: Configuration and setting parameters
2	**2: SETUP Parameters**	Submenu 2: Configuration parameters
3		
4	**ENT: select ESC: exit**	Programming suggestions

B - Press key "ENT" to enter submenu "Setup Parameters" and the first item is displayed

1	**---- Setting choice ----**	Message for the operator: "Parameter selected"
2	**Flow Counter**	Liter counter scale factor
3	**Pulse Val 10 dl**	An impulse corresponds to 10 dl
4		

C - With keys " **UP "or "DOWN** " the lines N°2 and N°3 with descriptions and values of the changeable parameters, scroll on the display in the direct and inverse direction:

2	**IN3 Swing 0..**	Full Scale in bar input IN3 for pressure transducer 4-20 mA
3	**20 mA à 30.0 bar**	20 mA corresponds to 15.0 bar

2	**IN4 Swing 0..**	Full Scale in bar inputIN4 for pressure transducer 4-20 mA
3	**20 mA à 15.0 bar**	20 mA correspond to 15.0 bar

2	**IN5 Swing 0..**	Full Scale in bar input IN5 for pressure transducer 4-20 mA
3	**20mA → 15.0 bar**	20 mA correspond to 15.0 bar

6.5.2 "SETUP Parameters"

D - If the parameter "**Flow Counter**" is selected and the key " ENTER", is pressed, the display will show the corresponding page with "**Value Change":**

1	**---- Value change ----**	Message for the operator: " change the value " of the selected parameter
2	**Flow Counter**	Factor of litre counter scale
3	**Pulse Val 10dl**	An impulse corresponds to 10 dl
4	**ENT: save ESC: abort**	Programming suggestions

E - With keys "UP" or " DOWN**" it is possible to change the content of line N° 3, selecting one of the available alternatives**

3	**2 spray relè**	Output relay configured to drive 2 Open/Close electrovalves
3	**3 spray relè**	Output relay configured to drive 3 Open/Close electrovalves
3	**1 modulating valves**	Static outputs configured to drive 1 Modulating valve
3	**2 modulating valves**	Static outputs configured to drive 2 Modulating valves

F - Press "**ESCAPE"** to cancel the setting made and go back to point (C), press the key "**ENTER**" to confirm what has been set and go back to point (C), to select and change another parameter.

G - If another parameter is selected, for example "**IN4 Swing",** press the key "**ENTER"**; the display will show the corresponding page with "**Value Change":**

1	**---- Value change ----**	Message for the operator: "change the value" of the selected parameter
2	**IN3 Swing 0..**	Full Scale in bar intake IN3 for pressure transducer 4-20 mA
3	**20 mA à 30.0 bar**	20 mA corresponds to 15.0 bar
4	**ENT: save ESC: abort**	Programming suggestions

H - With keys "**UP**" or "**DOWN**" the numerical value to the right of line N°3 can be increased or decreased; by keeping the key pressed you can accelerate the setting:

I - By pressing key "**ESCAPE**" you can cancel the setting made and return to point **(H)**, by pressing key "**ENTER**" you can confirm the new value set and return to point **(C)** to select and change another parameter.

L - After setting the new values, to confirm the choices made and save the values changed, simultaneously press the keys "**ENTER**" + "**ESCAPE**"; the following temporary message will be displayed:

1		
2	**Saving New Values**	Saving new data in progress, wait
3	**Plase Wait**	N.B. This message reminds the operator that saving new data
4		has not yet occurred

M - Then you exit change parameters and return to the **start page**.

O - To cancel the choices made and restore the previous values, press **"ESCAPE**"; the following temporary message will be displayed:

1	**Restoring Old Values**	Restore old parameter values
2	**Changed Values**	The values changed are discarded
3	**Discarded**	
4		

P - Right after, you return to point **(A)**, to the selection page of the specific submenu.

6.5.3 "Programmable alarms"

This submenu allows for the reading and changes (Enabling/Disabling) of the Programmable Alarms

A - Starting from the corresponding selection page of the submenus:

1	**---- Configuration ----**	Function Mode: configurationt and setting parameters
2	**3: Programmable Alarm**	Submenu 3: Enabling Programmable Alarms
3		
4	**ENT: select ESC: exit**	Programming suggestions

B - Press key "ENT" to enter submenu "**Programmable Alarm**" and the first item is displayed:

1	**---- Setting choice ----**	Function Mode: configuration and setting parameters
2	**Programmable Alarm**	Submenu 3: Enabling Programmable Alarms
3	**IN1 Input Comm. Bypass**	Alarm on command signal 1-10V **(Com 1 < 1V)** , Output IN1
4	**ENT: select ESC: exit**	Programming suggestions

C - With keys "**UP" or "DOWN**" the lines N°2 and N°3 with descriptions and values of the changeable parameters, scroll on the display in the direct and inverse direction:

2	**Programmable Alarm**	Alarm conditions selected
3	**IN Ice Temper. Active**	Ice Alarm (**T < T Ice**) , Input IN2

2	**Programmable Alarm**	Alarm conditions selected
3	**IN3 Line Pressure Active**	Alarm Pressure of Line (**Pi < 0.85 X P Prj**), input IN3

I - If the item in line N°3 is selected "**Input Command Bypass**" and the key "**ENTER**" is pressed; the display will show the corresponding page with "**Value Change**":

1	**---- Value change ----**	Message for the operator: "change the value" of the selected parameter
2	**Programmable Alarm**	Submenu 3: Enabling Programmable Alarms
3	**1. Input Comm. Bypass**	Alarm on command signal 1-10V **(Com 1 < 1V)** , Output IN1
4	**ENT: save ESC: abort**	Programming suggestions

L - With keys "**PD" or "DOWN**" the content of line N°3 is changed from "**Bypass" to "Active**" and viceversa.

M - Press "**ESCAPE**" to cancel the setting made and return to point(C), whereas by pressing the "**ENTER**" key what has been input is confirmed and you return to point **(C),** to select and change another parameter.

O - After setting the new values, to confirm the choices made and save the changed values, simultaneously press keys "**ENTER" + "ESCAPE";** the following temporary message will be displayed:

1		
2	**Saving New Values**	Saving new data in progress, wait
3	**Plase Wait**	N.B. This message reminds the operator that saving new data
4		has not yet occurred

P - Then you exit change parameters and return to the **start page**.

Q - To cancel the choices made and restore the previous values, press "**ESCAPE";** the following temporary message will be displayed: temporaneo:

1	**Restoring Old Values**	Restore old parameter values
2	**Changed Values**	The values changed are discarded
3	**Discarded**	
4		

R - Right after, you return to point **(A),** to the selection page of the specific submenu.

N.B. Loading a new default configuration, the active programmable alarms are also changed, see par. 6.3.1 .

6.5.4 "PID Parameters"

This submenu allows reading and changing of the PID Controller parameters of the modulating valves. Both valves use the same values.

A - Starting from the corresponding selection page of the submenus:

1	**---- Configuration ----**	Function Mode: configuration and setting parameters
2	**3: PID Parameters**	Submenu 3: Parameters PID Adjustment Ring
3		
4	**ENT: select ESC: exit**	Programming suggestions

B - Press key "**ENT"** to enter submenu "Setup Parameters" and the first item is displayed:

1	**---- Setting choice ----**	Message for the operator: "Parameter selected"
2	**5.1: PID P Value**	5.1 Parameter PID selected, Proportional band "P"
3	**P 2.0 bar**	Value Proportional band "P": 2.0 bar
4		

C - With keys "**UP" or "DOWN**" the lines N°2 and N°3 with descriptions and values of the changeable parameters are displayed with relative values:

2	**5.2: PID I Value**	5.2 Parameter PID selected, Additional Constant "I"
3	**I 0**	Value Additional Constant "I": 0
2	**5.3: PID D Value**	5.3 Parameter PID selected, Proportional band "P"
3	**D 1**	Value Constant Derivative "D": 1
2	**5.4: PID I Time**	5.4 Parameter PID selected, Integration Time "I Time"
3	**ti 1,0 sec**	Value Integration time "ti": 1.0 sec
2	**5.5: PID D Time**	5.5 Parameter PID selected, Derivation Time "D Time"
3	**td 10,0 sec**	Value Derivation time "td": 10.0 sec

D - As seen in the previous **par. 6.3.1 (**referring to points from Dto L), after selecting the required parameter, press the key "ENTER" and the display will show the corresponding page with the heading "**Value Change**" in the first line.

E - With keys "**UP" or "DOWN**" the value in line N°3 can be changed as required; by keeping the key pressed you can accelerate the setting.

F- By pressing "**ESCAPE"** the setting made is cancelled and it goes back to point **(D),** while by pressing "ENTER" the new setting is confirmed and you go back to point (**C).** If another parameter needs to be changed, proceed as above.

G - After setting the new values, to confirm the choices made and save the changed values, simultaneously press keys "**ENTER" + "ESCAPE"**. To cancel the choices made and restore the previous values, press **"ESCAPE".**

6.5.5 "MODBUS Parameters"

The following parameters refer to the use of serial RS-485 optional dedicated to the connection with master unit (PC Host).

A - Starting from the corresponding selection page of the submenus:

1	**---- Configuration ----**	Function Mode: Configuration and setting parameters
2	**4: MODBUS Parameters**	Submenu 3: Interface parameters for communicating with ModBus (optional)
3		
4	**ENT: select ESC: exit**	Programming suggestions

B - Press key "ENT" to enter submenu "MODBUS Parameters" and the first item is displayed:

1	**---- Setting choice ----**	Message for the operator: "Parameter selected"
2	**Modbus Address**	Modbus address of this peripheral
3	**MBAddr 247**	Value Modbus Address: 247
4		

C - With keys "**UP" or "DOWN"** the lines N°2 and N°3 with descriptions and values of the changeable parameters are displayed with relative values:

2	**Modbus Rate**	Communication speed Modbus of this peripheral
3	**MBrate 9600**	Value Speed of communication: 9600 baud

2	**Modbus Parameters**	Other specifications Modbus communication of this peripheral
3	**MBtype 8b + 1s EVEN p.**	Specifications: 8 Bit 8 per character, 1 bit-stop, control parity shots

D - As seen in the previous **par. 6.3.1** (referring to points from **Dto L**), after selecting the required parameter, press the key "ENTER" and the display will show the corresponding page with the heading **"Value Change"** in the first line".

E - With keys **" UP " or " DOWN "** the value in line N°3 can be changed as required; by keeping the key pressed you can accelerate the setting.

F- By pressing **"ESCAPE"** the setting made is cancelled and it goes back to point (D), while by pressing "ENTER" the new setting is confirmed and it goes back to point (C) If changes of another parameter are required, proceed as above.

G - After setting the new values, to confirm the choices made and save the changed values and exit, simultaneously press keys "**ENTER" + "ESCAPE".** To cancel the choices made and restore the previous values, press "**ESCAPE".**

6.5.6 "RTC: Real Time Clock"

This submenu allows for reading and changing the values of the internal clock (RTC : Real Time Clock).

A - Starting from point "C" of par. 6.3:

1	**---- Configuration ----**	Function Mode: configuration and setting parameters
2	**5: R.T. CLOCK Setup**	Submenu N°5: Adjustment of internal Clock
3		
4	**ENT: select ESC: exit**	Programming suggestions

B - Press key "**ENTER**" and the start page is displayed; The "UP" And "DOWN" keys change the value of the HOURS, shown on line 1 of the display The data is updated on line 3. During setup, the data of the clock remain the same as those at operation start up, plus the changes introduced.

1	**5.1: Hour**	submenu 5, function 1: the adjustment of HOURS is running
2		
3	**16:16:03 18 / 02 /2011**	Current data internal clock: **Hours :, Minutes :, seconds, Day / Month / Year**
4	**ENT:OK&go ESC:KO&go**	Programming suggestions

C - Press "**ENTER"** to go to MINUTES, leaving for HOURS the last value set, press "**ESCAPE"** to switch to minutes, restoring for HOURS the preexisting value:

1	**5.2: Minute**	submenu 5, function 2: adjustment of MINUTES is running
2		
3	**16: 16: 03 18 / 02 /2011**	Current data internal clock: **Hours , Minutes, Seconds, Day / Month / Year**
4	**ENT:OK&go ESC:KO&go**	Programming suggestions

D - Proceed the same way for the following pages, where compared to the previous page, only line 1 changes:

1	**5.3: Second**	submenu 5, function 3: the SECONDS regulation is running
1	**5.4: Day**	submenu 5, function 4: the DAY regulation is running
1	**5.5: Month**	submenu 5, function 5: the MONTH regulation is running
1	**5.6: Year**	Submenu 5, function 6: the YEAR regulation is running

E - After programming the year the last page is displayed:

1	**ENT+ESC:sav. ESC:exit**	Programming suggestions
2		
3	**17: 15: 06 21 / 03 /2012**	Current data internal clock: **Hours :, Minutes :, seconds, Day / Month / Year**
4	**ENT:OK & go**	Programming suggestions

F - Pressing key "**ENTER" + "ESCAPE"** updates the clock with the new values, and the following temporary message appears and you go back to the start page, see par. 3.1 and par. 6.2:

1		
2	**Saving New Values**	Saving new values in course
3	**Please Wait**	Please wait
4		

G -By only pressing the **"ESCAPE**" key, the clock is not updated and the following temporary message appears and you go back to point "**A"** to introduce a new adjustment:

1	**Restoring Old Values**	
2	**Changed Values**	Ripristino dei valori precedenti
3	**Discarded**	I valori modificati vengono scartati
4		

H - By only pressing "ENTER**" point** (B) is displayed **again to introduce** a new adjustment.

7.0 MANUAL COMMAND OUTPUTS

Manual command of the relays and of the static power outputs; ensures the correct cabling can be checked together with the functionality of the actuators used. In particular ensures relays RL1, RL2, RL3, RL4, RL5 can be commanded and the static outputs “A-Open”, “A-Close,” “B-Open” and “ B-Close.” The current state of the output selected is shown and can be changed by pressing “**ENTER**,” each time the exit key is pressed, the state changes.

A - Starting from the page to select submenu N°7:

1	**---- Configuration ----**	Operating Mode: Configuration and Parameter Settings
2	**7: Manual Commands**	Submenu 7: Manual Commands of the outputs
3		
4	**ENT: select ESC: exit**	Suggestions for programming

B - Press key “**ENTER** ” to enter submenu N°7: “Manual Commands”; all the outputs are switched off, and the start page is displayed:

1	**Manual Commands**	Message for the operator: “Manual command of Outputs”
2	**Rampa1 OFF**	**RL5, Ramp N°**1 current state: OFF
3	**ENT: On-Off ESC: Exit**	Press “ENTER” switching ON < > OFF; “ESCAPE”: output
4	**INC: Next DEC: Back**	Press “INC (+)” next output, “DEC (-)” previous output

C - With keys “**INC**” or “**DEC** ” line N° 2 scrolls on the display in the direct or inverse direction, going to other outputs

2	**RL5 Rampa1 OFF**	**Command RL4: Output Ramp N°2**, current state: OFF
2	**RL4 Ramp2 OFF**	**Command RL4: Output Ramp N°2**, current state: OFF
2	**RL3 Ramp3/Drain OFF**	**Command RL3: Output Ramp N°3**, current state: OFF
2	**RL6 Pump OFF**	**Command RL6: output Pump**, current state: OFF
2	**RL2 Relay Spray OFF**	**Command RL2: output Spray signal running,** current state: OFF
2	**RL1 Alarm relay OFF**	**Command RL1: Output Alarm signal**, current state: OFF
2	**Valve A Open OFF**	**Output Fixed per Valv. Modul. “A” action “Opens”**, current state: OFF
2	**Valve A Close OFF**	**Output Fixed for Valv. Modul. “A” action “Closes”,** current state: OFF
2	**Valve B Open OFF**	**Output Fixed per Valv. Modul. “B” action “Opens”,** current state: OFF
2	**Valve B Close OFF**	**Output Fixed per Valv. Modul. “B” action “Closes”**, current state: OFF

D - Press key “**ESC**,” to return to the start and the device returns to normal operation.

8.0 ALARM AND ATTENTION MESSAGES

The **messages of ALARM** are connected to situations which cause the arrest of regulation, while **ATTENTION messages** are connected to problems which DO NOT block normal function.

When the device is running normally, the start page will appear on the display

1	**---- Dry ---- HH. MM**	State of System: Dry, Spray not enabled (*)**, RTC Hours And Minutes**
2	**Pin 5.0 bar Com 1,0 V**	Input pressure 5.0 bar, Command Voltage 1.0 V
3	**T 8,5 °C Relè - - -**	Ambient temperature = **8.5 °**C, Relay command outputs inserted: none
4	**0,00 l/m HHHH,MM**	Total value of liter counter (l/m), Overall value of the hour meter

If an alarm appears, the corresponding message is displayed in the first line of the screen; for example, if the ambient temperature drops below the fixed value, the following message will show up for the ice alarm:

1	**Ice Temperature**	State of System: Ice Alarm **Tamb < T Ice**
2	**Pin 5.0 bar Com 1,0 V**	Input pressure 5 bar, Command Voltage 0 V
3	**T 7,5 °C Relè - - -**	Ambient temperature = **7.0 °**C, Relay command outputs inserted: none
4	**0,00 l/m HHHH,MM**	Total value of liter counter (l/m), Overall value of the hour meter

The cause of the ALARM is indicated on the first line of the display with a special message. If the device is in the normal working stage, the display starts to flash to attract the attention of the operator, while if it is in the programming stage, no message appears, it will appear after exiting this stage. **In any case the alarm relay RL1 is de-energized (see par. 3.3.7) and led DL3 on.**

The alarm messages are displayed one at a time in decreasing order, as for the following table, where the relative cause is indicated:

1	**Alarm Power V. MOT**	Alarm Power (probable CC) on input Motorized Valves (2)
1	**Fault Motor Valve A**	Breakdown (overcharge, or open circuit) on piloting Motorized Valve “A” **(3)**
1	**Fault Motor Valve B**	Breakdown (overcharge, or open circuit) on piloting Motorized Valve “B” (4)
1	**Alarm Power ELV**	ALARM Power (probable CC) on powering electrovalves Open/Close (1)
1	**Board Overheating**	Stop for temperature logic card > 85°C
1	**Ice Temperature**	Ice Alarm : Outdoor temperature lower than **Ice Alarm Temperature**
1	**IN2 Under or Open**	Input Signal IN2 lower than the minimum value (< -2 0 °C) or open
1	**IN2 Over or Short**	Input signal IN2 higher than the maximum value (> 90 °C) or in short circuit
1	**IN3 Under or Open**	Input Signal IN3 lower than the minimum value (< -2,0 mA) or open
1	**IN3 Over or Short**	Input signal IN3 higher than the maximum value (> 24,0 mA) or in short circuit
1	**IN4 Under or Open**	Input Signal IN4 lower than the minimum value (< 2.0 mA) or open **(2)**
1	**IN4 Over or Short**	Input signal IN4 higher than the maximum value (> 24.0 mA) or in short circuit **(2)**
1	**IN5 Under or Open**	Input signal IN5 lower than the minimum value(< 2.0 mA) or absent **(3)**
1	**IN5 Over or Short**	Input signal IN4 higher than the maximum value (> 24.0 mA) or in short circuit **(3)**

1	**IN1 Command Under**	Input signal IN1 lower than the minimum value (< 1 V)
1	**IN1 Command Over**	Input signal IN1 higher than the maximum value (> 11 V)

(1) Alarm running only with "**Spray Driver Type**" for 1, 2, 3 electrovalves Open/Close

(2) Alarm running only with "**Spray Driver Type**" for N°1 or N°2 modulating valves

(3) Alarm running only with "**Spray Driver Type**" for N°1 modulating valves

(4) Alarm running only with "**Spray Driver Type**" for N°2 modulating valves

- The alarms are displayed with the same priority they were listed with, the presence of an alarm with a greater priority prevents the display of those with a lower priority.
- All the alarm conditions described can be self-restored and are automatically cancelled when the cause is removed.

The possible **attention messages** and relative causes are:

1	**Line Pressure Low**	Alarm Line Pressure: value lower than 85% **ofP Prj** (design pressure)
1	**Outlet Drainage Pres**	Alarm Outlet Pressure: the value is not cancelled during the outlet stage (drainage)

9.0 PRODUCT DISPOSAL

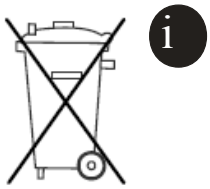

The device should be part of differential waste disposal collection in compliance with the current local legislation on disposal

NOTES

ENERGY-SAVING SYSTEM

SAVES UP TO

27%

OF ENERGY

ADVANCED ADIABATIC SYSTEM

-90%

OF WATER CONSUMPTION

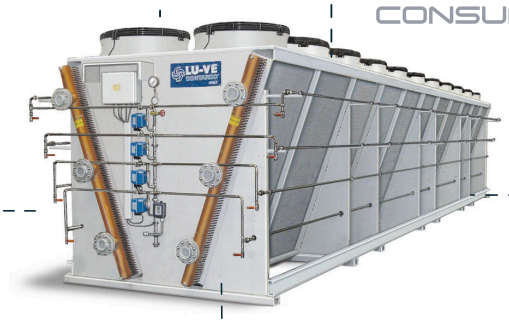

QUICK START-UP

READY TO PERFORM IN LESS THAN

10 MIN

BOOSTED REGULATION

100% MODBUS

SYSTEM MANAGEMENT

CLEAN NOISELESS TECHNOLOGY

0%

Extra dB

THD FREE

EC CONTROLS FRIENDLY SOLUTIONS

PLUG& PLAY

QUICK START-UP

MODBUS INSIDE

ADIABATIC MANAGER

INTELLIGENT ENERGY SAVING IES

CLIMA SINERGY CLS INSIDE

THD FREE

EXTRA dB FREE

WARRANTY 3 YEARS

FULL GUARD SYSTEM



approved controller for embpapst products

approved controller for ECblue products ZIEHL-ABEGG

SELPRO

www.selpro.it